F.A. RTE.	SECTION	COUNTY	TOTAL SHEETS	SHEET NO.
90/94	2004-060PM	COOK	30	30
STA.		TO STA.		
FED. ROAD DIST. NO.	ILLINOIS	FED. AID PROJECT		

62799

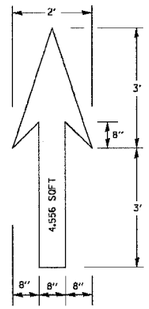

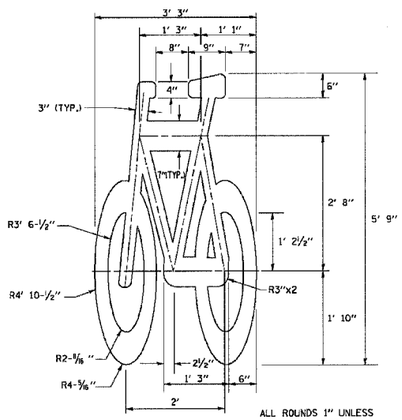

BICYCLE LANE SYMBOL

ALL ROUNDS 1" UNLESS OTHERWISE NOTED.

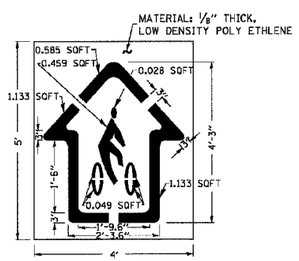

NOTE:

1.) FOR BIKE LANE SYMBOLS ONLY, USE PRE-FORMED THERMOPLASTIC SYMBOL MANUFACTURED BY 3M, PRODUCT "STAMARK" #3801

2.) THE RESIDENT ENGINEER SHALL CONTACT MR. BEN GOMBERG AT 312-744-8093 AT LEAST ONE CALENDAR WEEK PRIOR TO INSTALLING BIKE LANE SYMBOLS.

TYPICAL BIKE LANE SYMBOLS
DRAWING #28

DRAWING #29

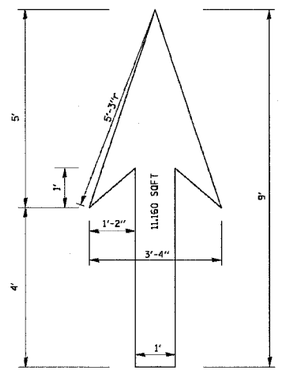

DRAWING #30

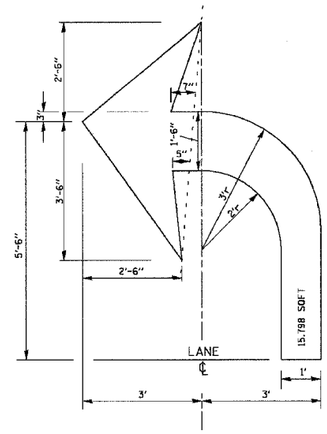

DRAWING #31

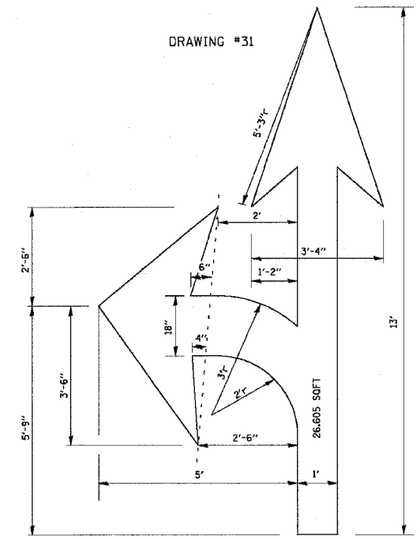

DRAWING #32

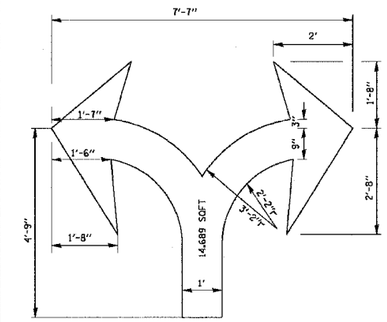

DRAWING #33

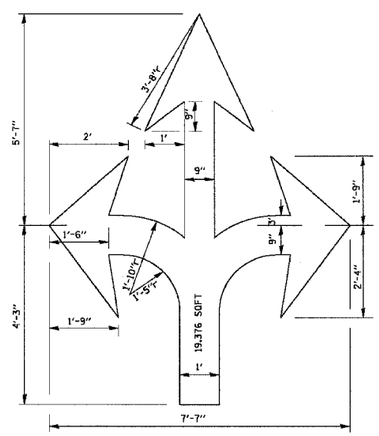

DRAWING #34

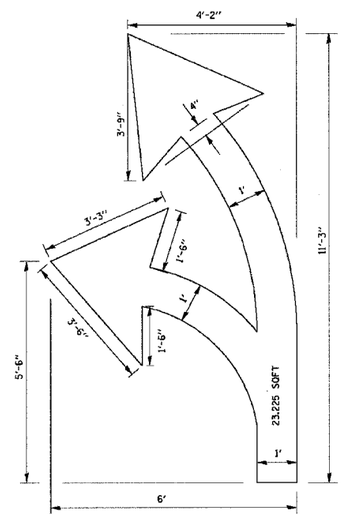

DRAWING #35

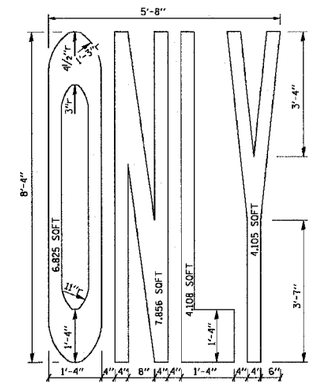

NOTE:

ALL MARKINGS SHALL BE SOLID WHITE UNLESS OTHERWISE NOTED IN THE PLANS

2 OF 2

REVISIONS	
NAME	DATE
T. RAMMACHER	12/07/00

ILLINOIS DEPARTMENT OF TRANSPORTATION

CITY OF CHICAGO
TYPICAL PAVEMENT MARKINGS.

SCALE: NONE
DATE 10/18/2002

DRAWN BY
CHECKED BY
TC-24

REVISION DATE: 12/07/00

DATE-TIME
DGN-SPEC
V-TC24