ROUTE NO.	SECTION	COUNTY	TOTAL SHEETS	SHEET NO.
F. A. I. 80/94	0203.1B	COOK	200	123
FED. ROAD DIST. NO. 1	ILLINOIS	FED. AID PROJECT-		

SHEET NO. 61
91 SHEETS

CONTRACT NO. 62854

STATE OF ILLINOIS
DEPARTMENT OF TRANSPORTATION

GIRDER MOMENT TABLE — GIRDER 3		0.4 Sp.7	Pier 7	0.5 Sp.8	Pier 8	0.6 Sp.9
Is	(10^6 mm^4)	33302	68935	33302	68935	33302
Ic (n)	(10^6 mm^4)	64858	---	64858	---	64857
Ic (3n)	(10^6 mm^4)	47527	---	47527	---	47527
Ss	(10^3 mm^3)	31069	64465	31069	64465	31069
Sc (n)	(10^3 mm^3)	42487	---	42487	---	42486
Sc (3n)	(10^3 mm^3)	37200	---	37200	---	37199
Sb_f	(10^3 mm^3)	557	1938	557	1938	557
@	(kN/m)	13	20	13	20	13
M℄	(kN·m)	1917	8703	2588	8054	1384
s ℄	(kN/m)	4	---	4	---	4
Ms ℄	(kN·m)	803	---	978	---	603
M⊥	(kN·m)	1169	1973	1220	1900	1093
M (Imp)	(kN·m)	234	395	244	380	219
$^5/_3$[M⊥ +M (Imp)]	(kN·m)	2337	3945	2440	3799	2186
Ma	(kN·m)	6574	16443	7808	15408	5425
Mb_f	(kN·m)	28	38	32	36	13
fs ℄(non-comp)	(MPa)	62	135	83	125	45
fs ℄(comp)	(MPa)	22	---	26	---	16
fs$^5/_3$[M⊥ + M (Imp)]	(MPa)	55	61	57	59	51
f_f	(MPa)	51	20	58	19	23
fs (Overload)	(MPa)	138	196	167	184	112
fs (Total)	(MPa)	180	255	217	239	146
Fcr (Overload)	(MPa)	328	289	328	289	328
VR	(kN)	240	---	276	---	276
Fcr	(MPa)	345	323	345	323	345

GIRDER MOMENT TABLE — GIRDER 6		0.4 Sp.7	Pier 7	0.5 Sp.8	Pier 8	0.6 Sp.9
Is	(10^6 mm^4)	37741	90378	47214	90378	33302
Ic (n)	(10^6 mm^4)	71704	---	92113	---	62795
Ic (3n)	(10^6 mm^4)	52575	---	66247	---	46359
Ss	(10^3 mm^3)	37333	82941	53414	82941	31069
Sc (n)	(10^3 mm^3)	49526	---	69473	---	41831
Sc (3n)	(10^3 mm^3)	43760	---	61805	---	36723
Sb_f	(10^3 mm^3)	836	2642	1761	2642	557
@	(kN/m)	15	30	16	30	15
M℄	(kN·m)	2160	11242	4286	10546	1169
s ℄	(kN/m)	11	---	11	---	11
Ms ℄	(kN·m)	1112	---	1895	---	691
M⊥	(kN·m)	2186	3258	2800	3190	1863
M (Imp)	(kN·m)	437	652	560	638	373
$^5/_3$[M⊥ +M (Imp)]	(kN·m)	4371	6516	5600	6380	3726
Ma	(kN·m)	9936	23086	15315	22004	7262
Mb_f	(kN·m)	49	45	76	42	16
fs ℄(non-comp)	(MPa)	58	136	80	127	38
fs ℄(comp)	(MPa)	25	---	31	---	19
fs$^5/_3$[M⊥ + M (Imp)]	(MPa)	88	79	81	77	89
f_f	(MPa)	60	17	43	16	29
fs (Overload)	(MPa)	172	214	192	204	146
fs (Total)	(MPa)	223	278	249	265	189
Fcr (Overload)	(MPa)	328	294	328	293	328
VR	(kN)	320	---	360	---	320
Fcr	(MPa)	345	323	345	323	345

GIRDER REACTION TABLE — GIRDER 3		Pier 6W	Pier 7	Pier 8	W. Abut.
R℄	(kN)	307	1361	1321	276
R⊥	(kN)	171	349	342	174
Imp.	(kN)	43	87	85	44
R (Total)	(kN)	521	1797	1748	494

GIRDER REACTION TABLE — GIRDER 6		Pier 6W	Pier 7	Pier 8	W. Abut.
R℄	(kN)	418	1410	1370	329
R⊥	(kN)	192	359	352	181
Imp.	(kN)	48	90	88	45
R (Total)	(kN)	658	1859	1810	555

Fcr - Critical average flange stress (smaller of Fcr1 or Fcr2 for partially braced flanges and Fy for continuously braced flanges) computed according to the 2003 AASHTO Guide Specifications for Horizontally Curved Steel Girder Highway Bridges (Sections 5.2, 5.3 and 5.4).

Fcr (Overload) - Critical average flange stress at overload computed according to the 2003 AASHTO Guide Specifications for Horizontally Curved Steel Girder Highway Bridges Section 9.5.

Is and Ss are the moment of inertia and section modulus of the steel section used in computing fs (Total and Overload).

Ic(n) and Sc(n) are the moment of inertia and section modulus of the composite section used in computing stresses due to live load.

Ic(3n) and Sc(3n) are the moment of inertia and section modulus of the composite section used in computing stresses due to superimposed dead load (see AASHTO 10.38).

VR is the maximum ⊥+ impact shear range in span.

Ma (Applied Moment) = 1.3 [M℄ + Ms℄ + 5/3 (M⊥ + M (Imp))]

fs (Overload) is the sum of stresses due to M℄ + Ms℄ + 5/3 (M⊥ + M (Imp))

fs (Total) is the sum of stresses due to 1.3 [M℄ + Ms℄ + 5/3 (M⊥ + M (Imp))]

Sb_f is the section modulus for one flange plate for lateral flange bending.

Mb_f is the lateral bending moment for flange plate (factored).

f_f is the calculated normal stress at the edge of flange due to lateral bending (factored).

M⊥ and R⊥ include the effects of centrifugal force and superelevation.

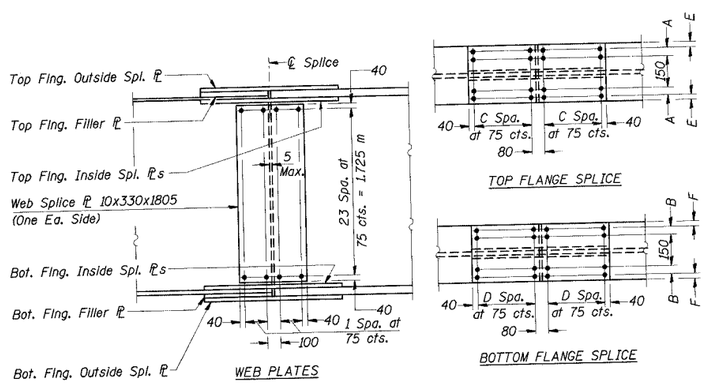

FIELD SPLICE 11, 12, 13, & 14

TABLE OF DIMENSIONS														
Girder Location	Field Splice No.	Top Flange Splice ℙ Dimensions		Bottom Flange Splice ℙ Dimensions		Filler ℙ Dimension		Bolt Spacing Dimensions					
		Outside ℙ	Inside ℙ	Outside ℙ	Inside ℙ	Top ℙ	Bottom ℙ	A	B	C	D	E	F
Girders G1, G2, & G3	11	20x410x910	25x170x910	20x410x760	25x170x760	-	5x410x375	90	90	5	4	40	40
	12	20x410x910	25x170x910	20x410x760	25x170x760	-	5x410x375	90	90	5	4	40	40
	13	20x410x910	25x170x910	20x410x760	25x170x760	-	5x410x375	90	90	5	4	40	40
	14	20x410x910	25x170x910	20x410x760	25x170x760	-	5x410x375	90	90	5	4	40	40
Girders G4, G5, & G6	11	20x410x910	25x170x910	25x410x1060	30x170x1060	10x410x450	5x410x525	90	90	5	6	40	40
	12	20x410x910	25x170x910	25x460x1360	30x195x1360	5x410x450	20x460x675	90	115	5	8	40	40
	13	20x410x910	25x170x910	20x460x1210	25x195x1210	-	25x460x600	90	115	5	7	40	40
	14	20x410x910	25x170x910	20x410x760	25x170x760	15x410x450	20x410x375	90	90	5	4	40	40

Notes:
1. All field splice plates, except fill plates to be AASHTO M270M, Grade 345 and meet N.T.R.
2. All Bolts are 22mm ϕ AASHTO M164 (ASTM A325).
3. Bolt Spacing Dimensions E and F are measured from the edge of the smaller width flange when flange plates at field splices are different widths.

DESIGNED	MAS
CHECKED	GPM
DRAWN	LK
CHECKED	GPM/ACF

ILLINOIS DEPARTMENT OF TRANSPORTATION
I-94/IL 394 SOUTH BOUND
MOMENT & REACTION TABLES & FIELD SPLICES, SPANS 7-9
WB I-80/94 TO SB IL 394 - RAMP G
FAI 80/94 - FAP 332 SECTION 0203.1B
COOK COUNTY
STA. 120+796.063 STRUCTURE NO. 016-2804
DATE 3/23/05
SCALE ----

HNTB

JBeauchamp
E:\34562\CADD\bi\CTR_28_2804\cds\fp150074a_2804.dgn
28-MAR-2005 12:30