62877

F.A. RTE.	SECTION	COUNTY	TOTAL SHEETS	SHEET NO.
290	0305-3026-L-3	COOK	55	24
STA.		TO STA.		
FED. ROAD DIST. NO.	ILLINOIS	FED. AID PROJECT		

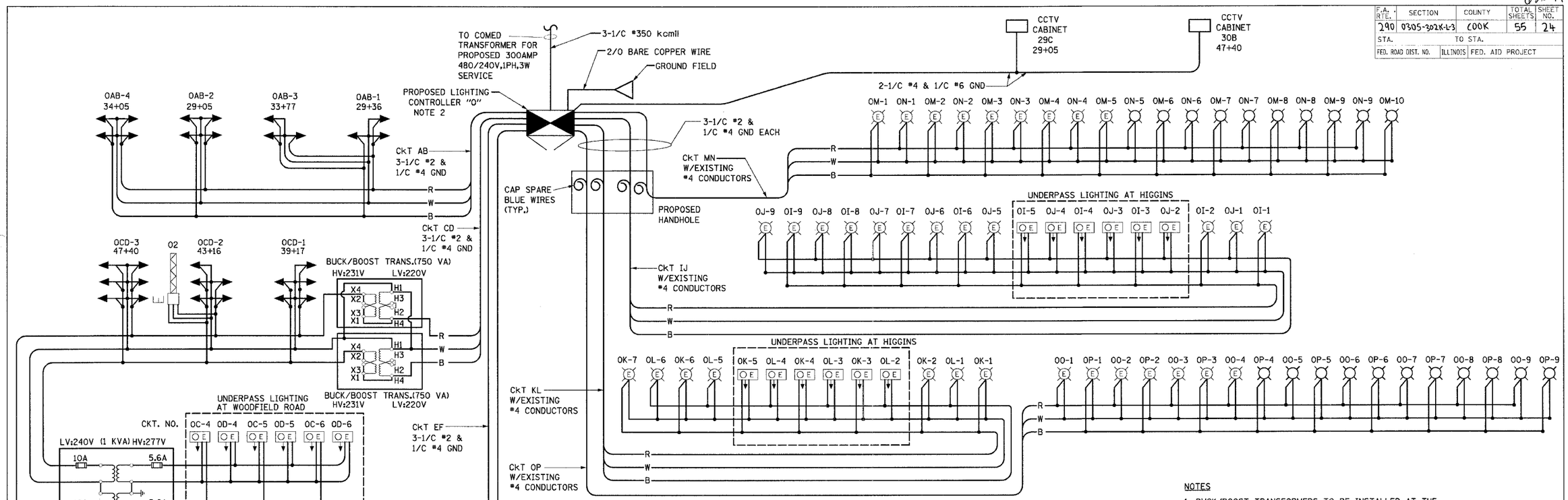

LOAD TABULATION FOR LIGHTING CONTROLLER "O"

CIRCUIT	DESCRIPTION	PHASE A (RED) AMPS	PHASE B (BLACK) AMPS	BREAKER SIZE AMPS
A	7 FIXTURES	27.3		70
B	7 FIXTURES		27.3	70
C	8 FIXTURES +1 SIGN + 3 UNDERPASS	34.5		70
D	8 FIXTURES + 2 SIGN + 3 UNDERPASS		35.4	70
E	7 FIXTURES	27.3		70
F	7 FIXTURES		27.3	70
G	8 FIXTURES + 3 SIGN + 5 UNDERPASS	35.4		70
H	8 FIXTURES + 4 SIGN + 5 UNDERPASS		36.3	70
I	6 FIXTURES + 3 UNDERPASS	15		70
J	6 FIXTURES + 3 UNDERPASS		15	70
K	4 FIXTURES + 3 UNDERPASS	10.8		70
L	3 FIXTURES + 3 UNDERPASS		8.7	70
M	10 FIXTURES	21		70
N	9 FIXTURES		18.9	70
O	9 FIXTURES	18.9		70
P	9 FIXTURES		18.9	70
Q				70
R				70
S				70
T				70
U				70
V				70
W				70
X				70
	TOTAL	190.2	187.8	
	CONNECTED LOAD	90.7kVA		

NOTES

1. BUCK/BOOST TRANSFORMERS TO BE INSTALLED AT THE DISCRETION OF THE ENGINEER.
2. PROPOSED LIGHTING CONTROLLER "O" IS LOCATED AT THE NORTHWEST CORNER OF HIGGINS ROAD AND FRONTAGE ROAD.

LEGEND

- PROPOSED TOWER MOUNTED 750W HPS LUMINAIRE-240V DESIGNATION AS INDICATED
- (E) EXISTING HPS LUMINAIRE TO BE REPLACED WITH HPS LUMINAIRE WITH MULTI-TAP BALLAST DESIGNATION AS INDICATED
- REINSTALLED LIGHTING UNIT
- O E EXISTING 150W MULTI-TAP UNDERPASS LUMINAIRE
- E EXISTING SIGN LUMINAIRE
- PROPOSED LIGHTING CONTROLLER, DUPLEX TYPE WITH RADIO CONTROL AND SCADA
- B BLACK PHASE CONDUCTOR
- W WHITE NEUTRAL CONDUCTOR
- R RED PHASE CONDUCTOR
- G GREEN GROUND CONDUCTOR

E-11

REVISIONS NAME	DATE

ILLINOIS DEPARTMENT OF TRANSPORTATION

ILLINOIS ROUTE 53
SINGLE LINE DIAGRAM
PROPOSED CONTROLLER "O"

SCALE: VERT. NONE HORIZ. DRAWN BY WDF
DATE 02-28-2005 CHECKED BY RER

HOH © HARRY O. HOFFER - ASSOCIATES, INC. DESIGN AND CONSULTING ENGINEERS 55 East Jackson Blvd. Chicago, Illinois 60604 312/346-8131
PROJECT NUMBER 2672
G:\PROJECTS\2672\DGNS\FINAL_04_01_05\SEGMENT 1\LIGHTING\E11.DGN