F.A.I. RTE.	SECTION	COUNTY	TOTAL SHEETS	SHEET NO.
94	•	COOK	37	24
STA. 2210+00.00		TO STA. 2356+00.00		
FED. ROAD DIST. NO.	ILLINOIS	FED. AID PROJECT		

• (1516.1, 1717 & 1818) I-3

62932

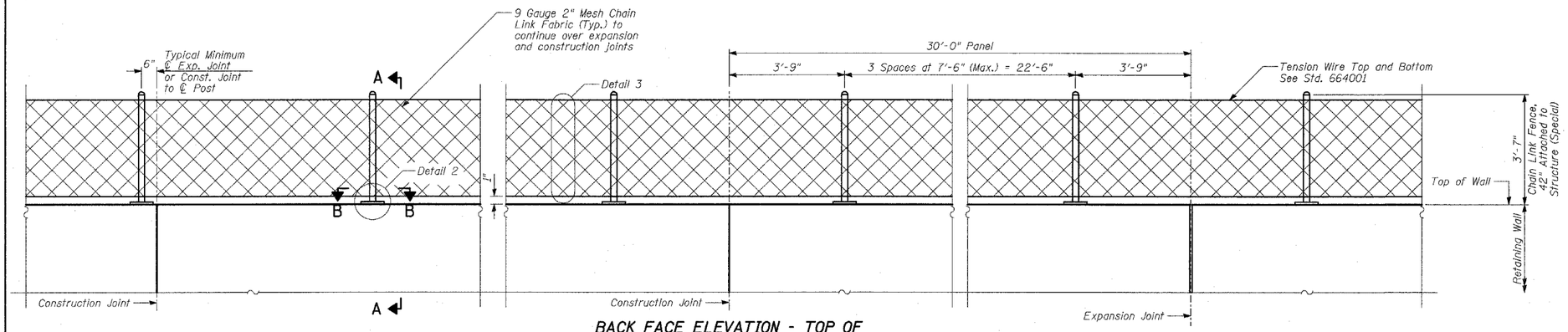

BACK FACE ELEVATION - TOP OF RETAINING WALL CHAIN LINK FENCE

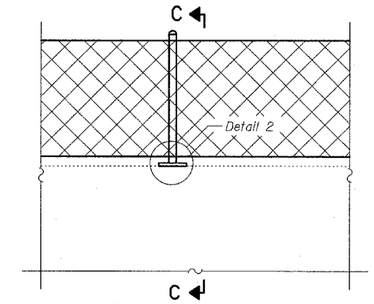

BACK FACE ELEVATION - TOP OF EXISTING RETAINING WALL CHAIN LINK FENCE

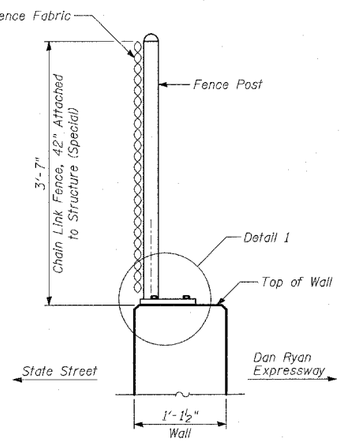

SECTION A-A

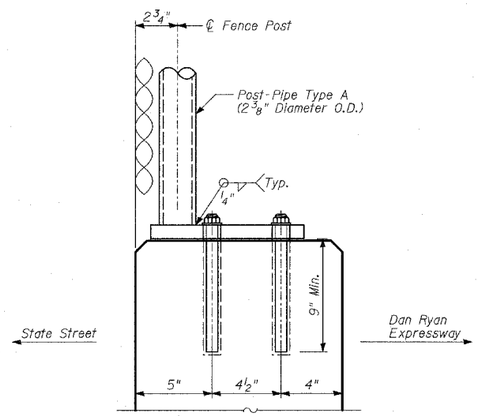

DETAIL 1

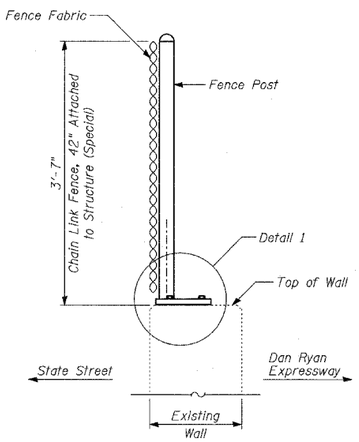

SECTION C-C

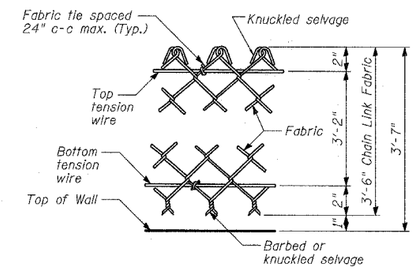

DETAIL 3

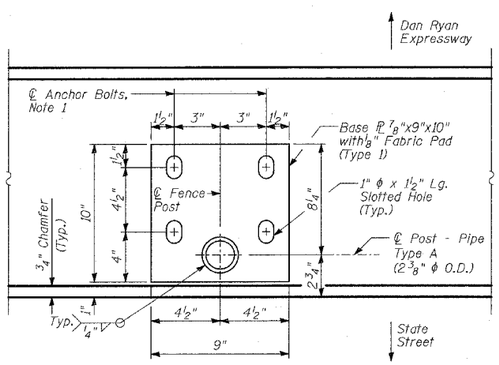

SECTION B-B
BASE PLATE PLAN

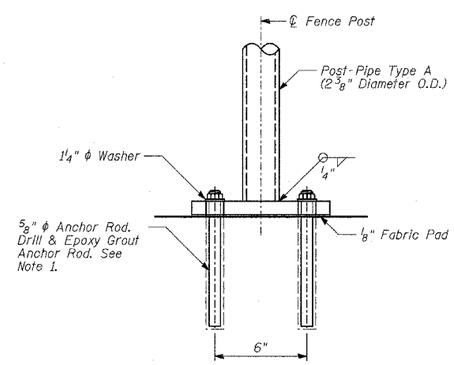

DETAIL 2

BILL OF MATERIAL

WALL	ITEM	UNIT	TOTAL
3	Chain Link Fence, 42" Attached to Structure (Special)	FOOT	324
4	Chain Link Fence, 42" Attached to Structure (Special)	FOOT	177
	Total	FOOT	501

NOTES:

1. The Contractor shall drill and epoxy grout ⅝" diameter anchor rods. The Contractor shall use the capsule or the adhesive cartridge type anchor rods that have been previously tested and given prior approval by the Department for the above specified anchor rod spacing. The Contractor shall install these anchor rods in pre-drilled holes according to the manufacturer's recommendations and procedures. The capsule or adhesive cartridge shall be sealed with pre-measured amounts of adhesive chemical. Anchor rod threading to be peened after nuts are installed.

2. For additional chain link fence details, see Standard 664001.

TY·LIN INTERNATIONAL

REVISIONS	
NAME	DATE

ILLINOIS DEPARTMENT OF TRANSPORTATION

F.A.I. 94 (DAN RYAN EXPRESSWAY)
RETAINING WALL ALONG STATE ST.
91ST ST. TO CPI&R RR
WALLS 3 & 4 - CHAIN LINK FENCE,
42" ATTACHED TO STRUCTURE (SPECIAL)

DESIGNED BY: MI, MAF
SCALE: N.T.S. DRAWN BY: MAF, DJR
DATE: APRIL 15, 2005 CHECKED BY: TD, MI

D:\0237\3\roadway\TRT\Tdr\R05\3a_w945.dgn
04/13/2005 07:30:19 AM