F.A.I. RTE.	SECTION	COUNTY	TOTAL SHEETS	SHEET NO.
94	•	COOK	37	27
STA. 2210+00.00		TO STA. 2356+00.00		
FED. ROAD DIST. NO.	ILLINOIS	FED. AID PROJECT		

• (1516.1, 1717 & 1818) I-3

62932

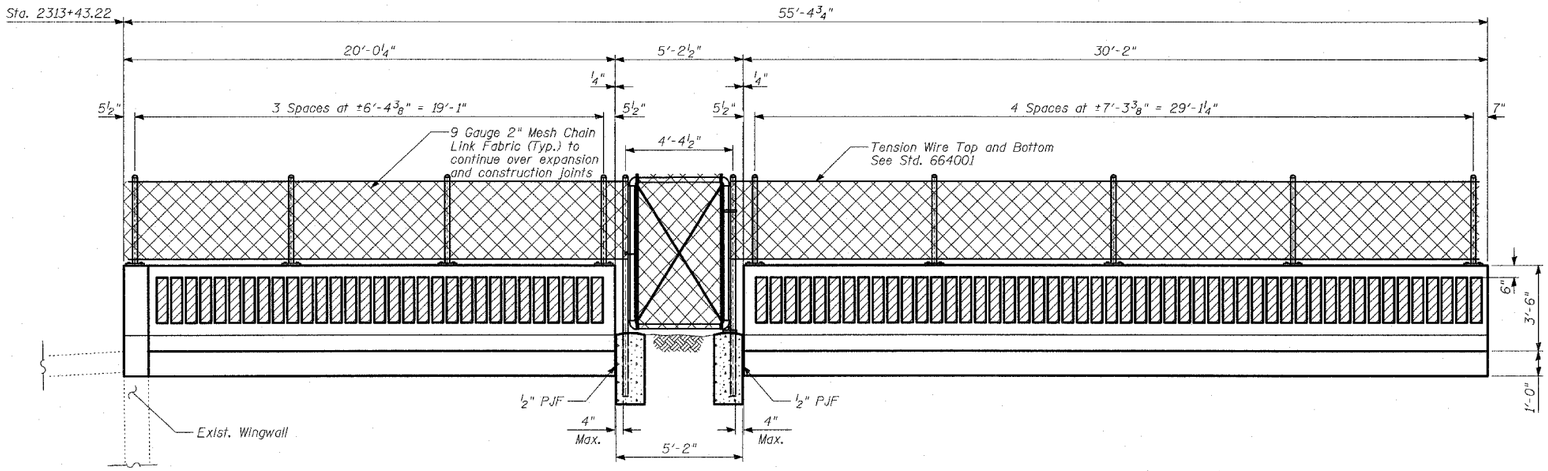

BACK FACE ELEVATION - TOP OF FLUTED KNEE WALL

BILL OF MATERIAL

WALL	ITEM	UNIT	TOTAL
69	Chain Link Gates (Special)	EACH	1

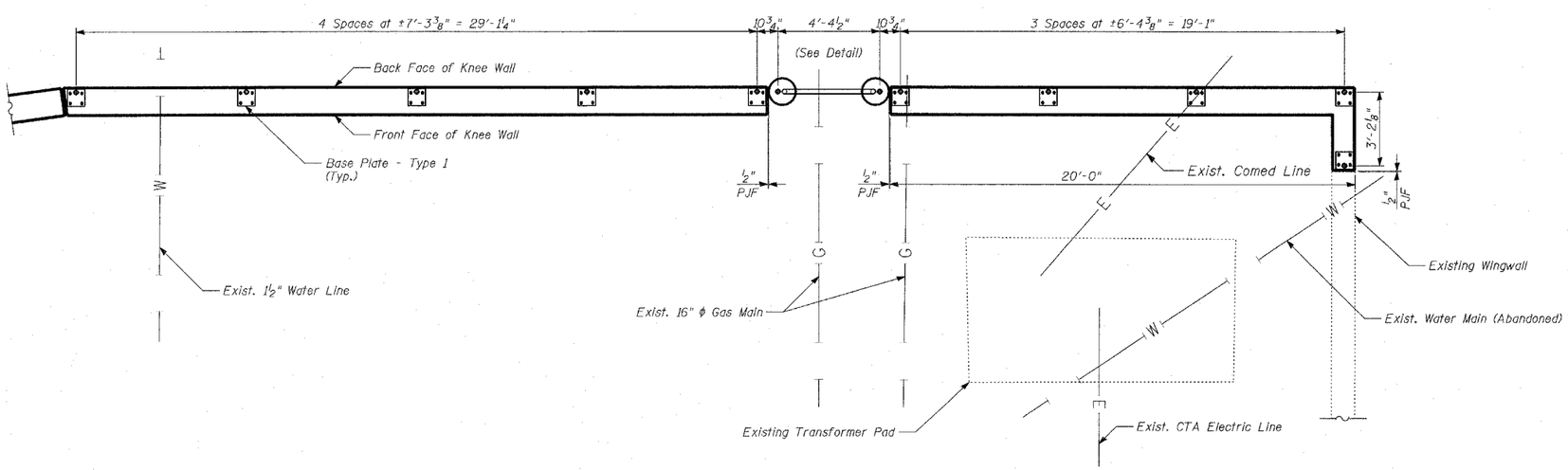

PLAN

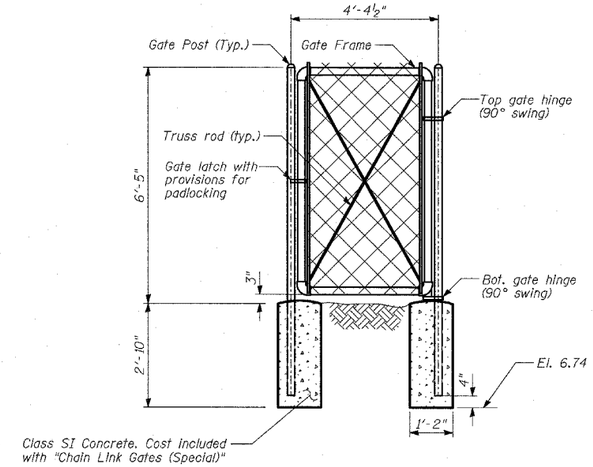

PEDESTRIAN GATE

TY·LIN INTERNATIONAL

NOTES:

1. Work this sheet with Sheets 25, 26, 28, 29, 32 and 33 of 37.

REVISIONS	
NAME	DATE

ILLINOIS DEPARTMENT OF TRANSPORTATION

F.A.I. 94 (DAN RYAN EXPRESSWAY)

RETAINING WALL ALONG STATE ST. ENTRANCE RAMP AT 79TH ST.
WALL 69 - CHAIN LINK GATES (SPECIAL)

SCALE: N.T.S.
DATE: APRIL 15, 2005

DESIGNED BY: MI, MAF
DRAWN BY: MAF
CHECKED BY: TD, MI

p:\02373\cad\cl7\117dr\sh163a_w97s.dgn
04/14/2005 10:08:14 AM