F.A.P. RTE.	SECTION	COUNTY	TOTAL SHEETS	SHEET NO.
549	116RS-1	OGLE	593	199
STA.		TO STA.		
FED. ROAD DIST. NO.	ILLINOIS	FED. AID PROJECT		

GRATED CULVERT EXTENSION NO. 1

RT /LT STA. 444 + 38.80

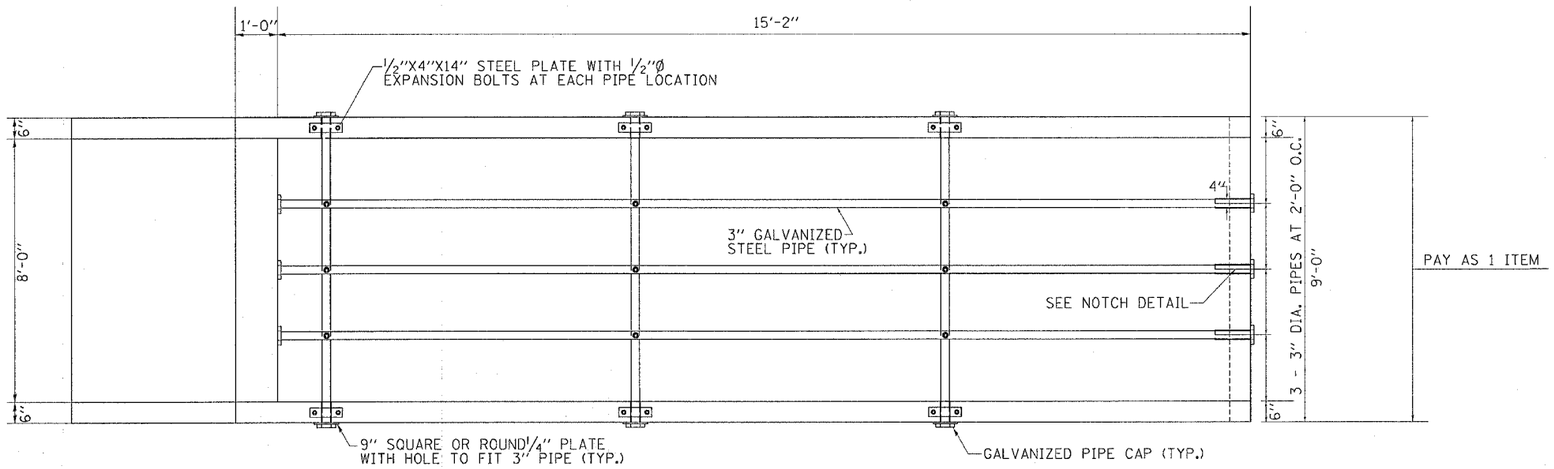

PLAN VIEW

CONTRACT NO. 64178

BILL OF MATERIALS

(FOR ONE EXTENSION)

DESCRIPTION	UNIT	QTY.
3" Galvanized Steel Pipe	3@	15'-2"
	3@	9'-4"
3" Galv Pipe Caps	EACH	12
1/4" Galv. Stl. Plate (9" Nominal)	EACH	6
1/2"x4"x14" Galv. Steel Plate	EACH	6
5/8"x9" Galv. Steel Bolts	EACH	9
Expansion Bolts 1/2"Ø	EACH	12

GENERAL NOTES:

Slope flow line of the extension at the same rate as the flow line of the box.

Bolts, Nuts, and Washers shall be in accordance with Article 710.11 of the standard specification and shall be galvanized.

The contract unit price "Each" for Grated Culvert Extension No. 1 shall be of precast construction. It shall also include the Class SI Concrete for the Collar, Galvinized Pipe, Bolts, Nuts, Washers, Steel Plates.

Contractor shall field verify pipe length prior to order. Steel pipes shall conform to A.S.T.M. A-53 (Type E or S) Grade B, Schedule 40, and shall be galvanized conforming to A.S.T.M. A-120

Steel Plates shall conform to AASHTO M-183 and shall be galvanized conforming to AASHTO M-111.

SEE PLAN AND PROFILE SHEET FOR MORE INFORMATION
SEE CULVERT LOCATION PLANS FOR MORE INFORMATION
SEE CULVERT STAGING PLANS FOR MORE INFORMATION

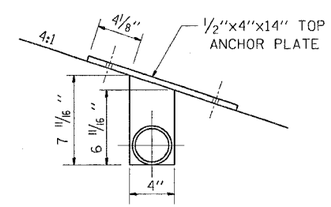

DETAIL "A"

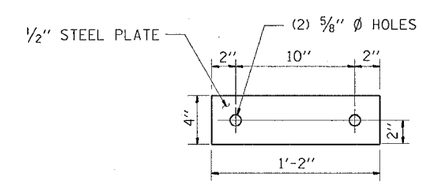

TOP ANCHOR PLATE

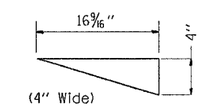

NOTCH DETAIL

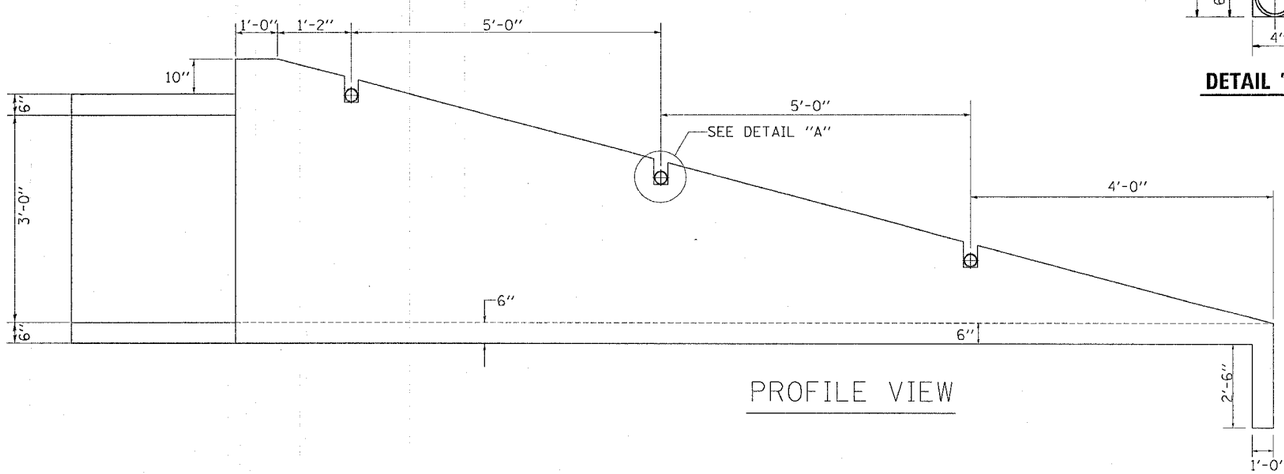

PROFILE VIEW

•DATE-TIME•
•DGN-SPEC•
•REF
•REF
•REF
•REF
•REF