CONTRACT NO. 64178

| F.A.P. RTE. | SECTION | COUNTY | TOTAL SHEETS | SHEET NO. |
|---|---|---|---|---|
| 549 | 116RS-1 | OGLE | 593 | 237 |
| STA. | | TO STA. | | |
| FED. ROAD DIST. NO. | ILLINOIS | FED. AID PROJECT | | |

# MANHOLES, SPECIAL

GENERAL NOTES

THE MANHOLES, SPECIAL SHALL BE CONSTRUCTED ACCORDING TO SECTION 602 OF THE STANDARD SPECIFICATION AND AS SPECIFIED HEREIN.

THE MANHOLES, SPECIAL SHALL BE PAID FOR AT THE CONTRACT UNIT PRICE PER EACH, MANHOLES SPECIAL, WHICH PRICE SHALL INCLUDE ALL FRAMES, LIDS, CLASS SI CONCRETE, REINFORCEMENT BARS, SAND CUSHION, FLAT SLAB TOPS AND ALL EXCAVATION AND BACKFILLING.

*THE CONTRACTOR SHALL USE AN INVERTED PIPE CULVERT CLASS A, TYPE 1, 96" TO CONSTRUCT THE MANHOLES, SPECIAL.

*THE BOTTOM SLAB SHALL BE REINFORCED WITH A MINIMUM OF 0.46 SQ IN/FT IN BOTH DIRECTIONS.

*THE TOP SLAB SHALL BE CONSTRUCTED OF CLASS SI CONCRETE WITH A MINIMUM OF 1.495 SQ IN/FT OF REINFORCEMENT.

*LIFTING DEVICES SHALL BE APPROVED BY THE ENGINEER.

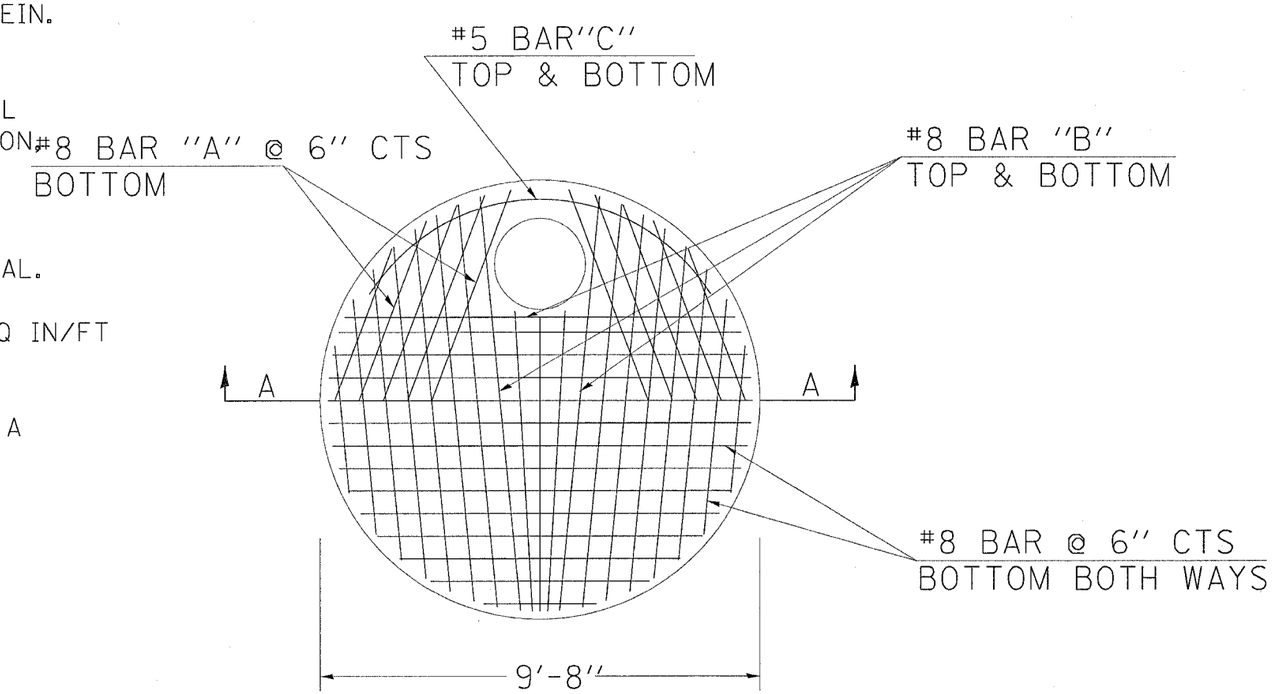


**PLAN**

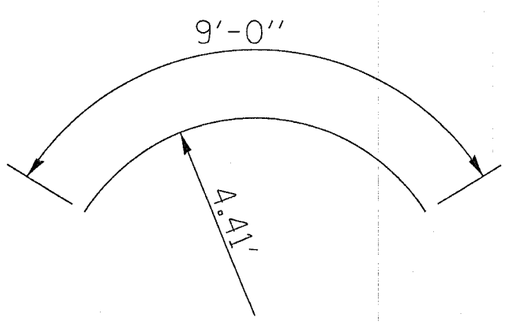


**BAR C**

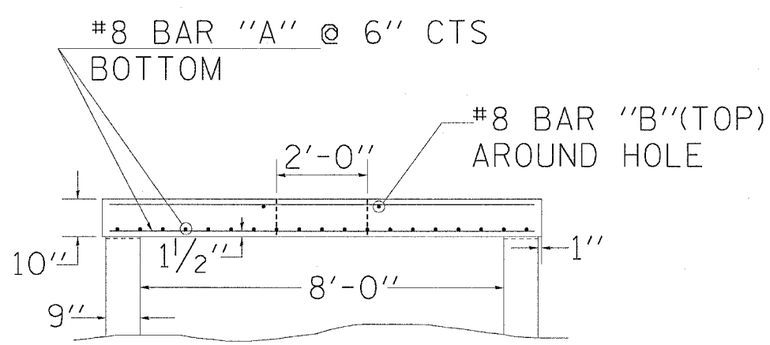


**SECTION A-A**

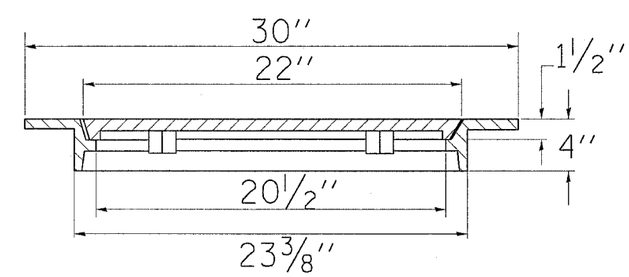


**FRAME AND LID DETAIL**

| REVISIONS | |
|---|---|
| NAME | DATE |

ILLINOIS DEPARTMENT OF TRANSPORTATION

SCALE: VERT. HORIZ.

DATE

DRAWN BY

CHECKED BY

PLOT DATE = Wed Feb 09 07:40:16 2005
FILE NAME = c:\pwworking\chicago\d0804197\d0804197spl.dgn
PLOT SCALE = 50.0000 ' / IN.
REFERENCE = $REF$