STATE OF ILLINOIS
DEPARTMENT OF TRANSPORTATION

ROUTE NO.	SECTION	COUNTY	TOTAL SHEETS	SHEET NO.
S.B.I. - F.A.I.	*	Winnebago	36	13
FED. ROAD DIST. NO. 7		ILLINOIS	FED. AID PROJECT-	

SHEET NO. 5
9 SHEETS

* (5VB, 5HB, 1-2HB)M CONTRACT #64A88

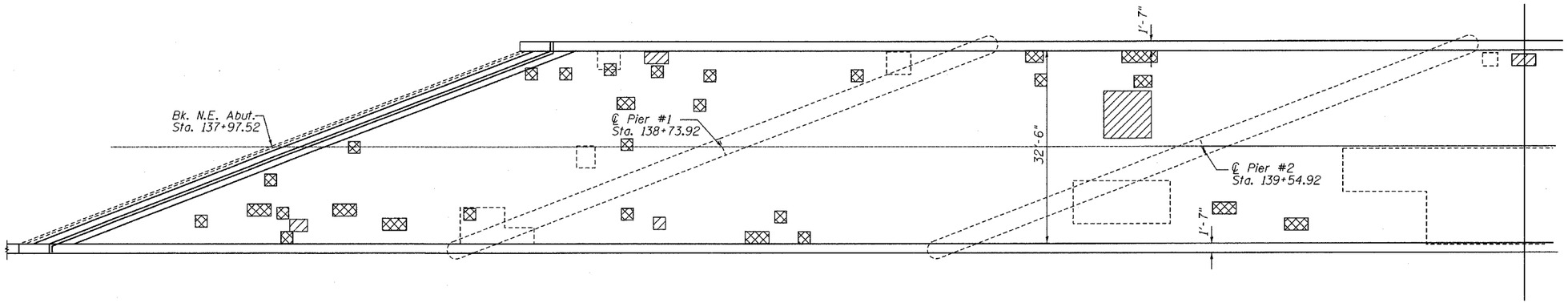

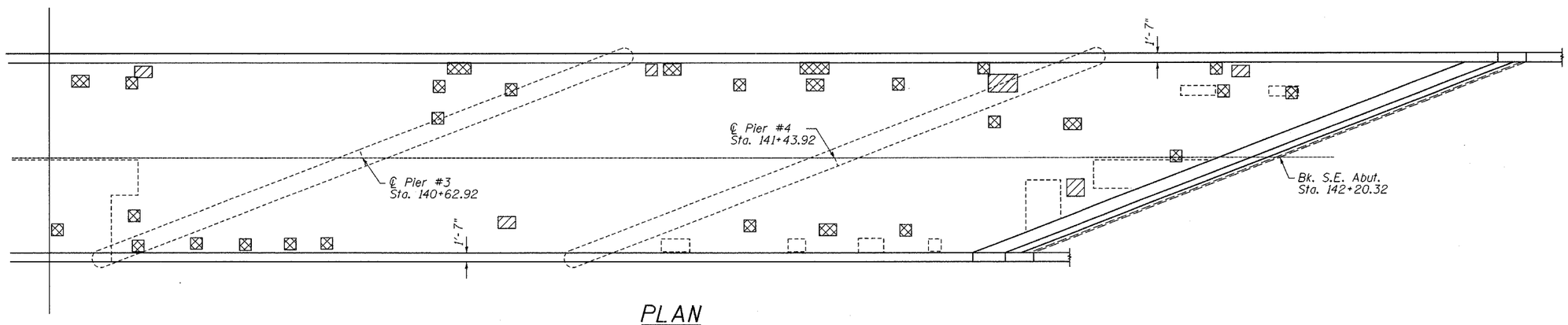

PLAN

Deck Slab Repair (Partial)

Deck Slab Repair (Full Depth)

Existing Deck Slab Repair

0 ft 7.5 ft 15 ft

BILL OF MATERIAL

ITEM	UNIT	TOTAL
Deck Slab Repair (Partial)	Sq. Yd.	110
Deck Slab Repair (Full Depth, Type 1)	Sq. Yd.	35
Deck Slab Repair (Full Depth, Type 2)	Sq. Yd.	22

Deck Survey Date: Octoboer 15, 2004

DESIGNED	SB, DP
CHECKED	SB
DRAWN	BH, BS
CHECKED	SB

NOTES:

The plan quantities for Deck Slab Repair (Partial and Full Depth) are estimated quantities from a deck survey provided by others. The areas shown on the deck repair plans for each structure are potential areas of Deck Slab Repair. The Deck Slab Repair quantities in Bills of Material are included as contingencies to be used as directed by the engineer during construction.
The actual locations and quantity of Deck Slab Repair on all structures shall be determined by the resident engineer in the field after removal of the existing wearing surface. Actual repair locations shall be shown on the same as-built plans.

DECK REPAIR PLAN
F.A.P. Route 303 &
FAB 738 (IL 251) OVER Railroad
SECTION (5VB, 5HB, 1-2HB)M
WINNEBAGO COUNTY
SN 101-0029