ROUTE NO.	SECT.	COUNTY	SHEET NO.	TOTAL SHEETS
F.A.I. 74	(72-7) R-3	PEORIA	520	1360
FED. ROAD DIST. NO. 7	ILLINOIS	FED. AID PROJECT		

CONTRACT NO. 68200

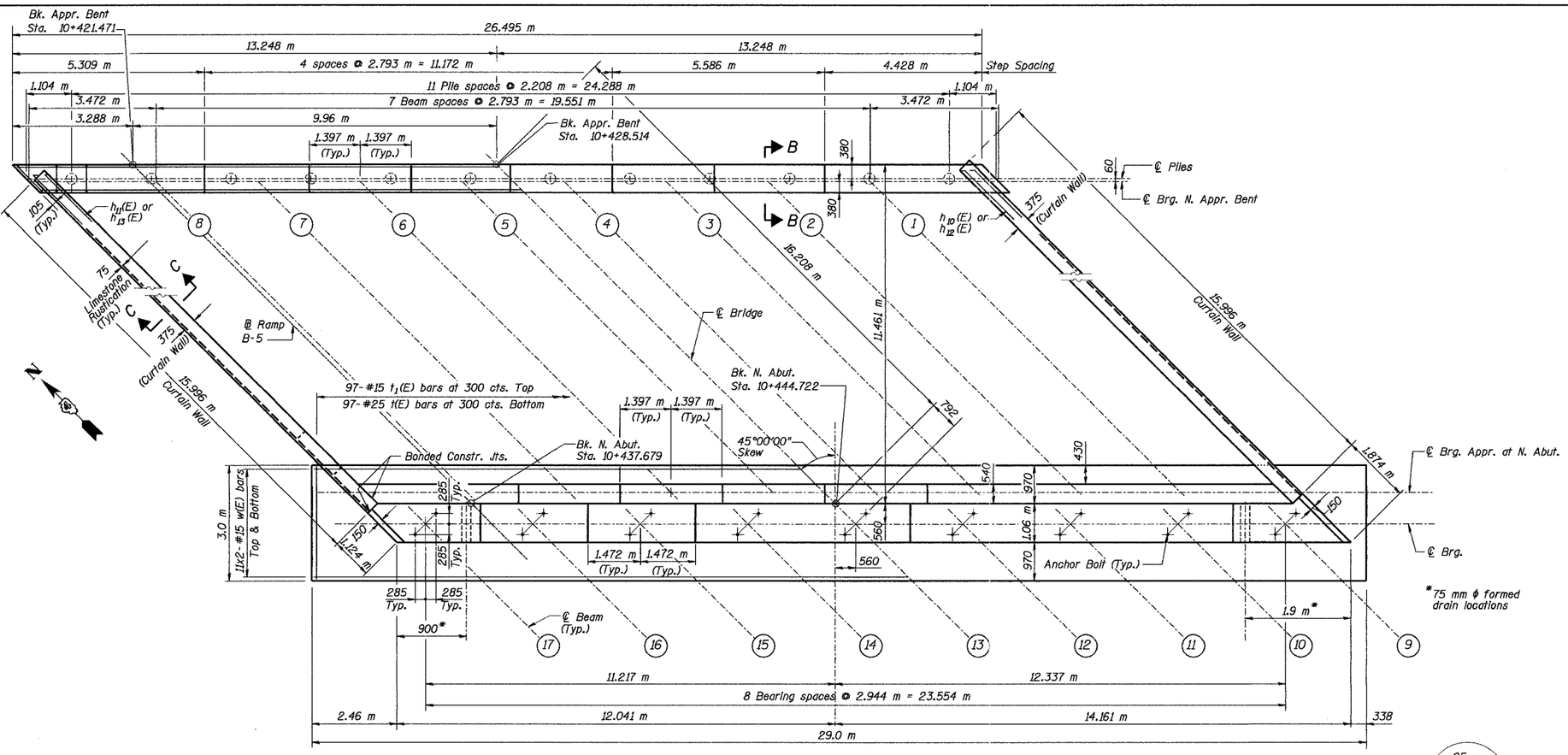

PLAN

Notes:

Space reinforcement in cap to miss anchor bolts.

Reinforcement bars designated (E) shall be epoxy coated.

For Bill of Material and reinforcement details, see sheet 23.

Work this sheet with sheet 22.

Pour steps monolithically with cap.

All dimensions are in millimeters (mm) except as noted.

Bars indicated thus 20 X 3-#15 etc. indicates 20 lines of bars with 3 lengths per line.

All stations based on ℄ Ramp B-5 stationing.

The maximum applied bearing pressure at the abutment is 238 kPa.

For Rustication on face of abutment and curtain wall, see sheet 30.

E.F. denotes each face.

For Sections A-A, E-E and F-F, see sheet 23.

APPR. BENT-PILE DATA

Type: 305 mm ϕ metal shell piles with 6 mm walls
Capacity: 400 KN
Est. Length: 12.5 m
No. Req'd.: 11 Plus 1 Test Pile

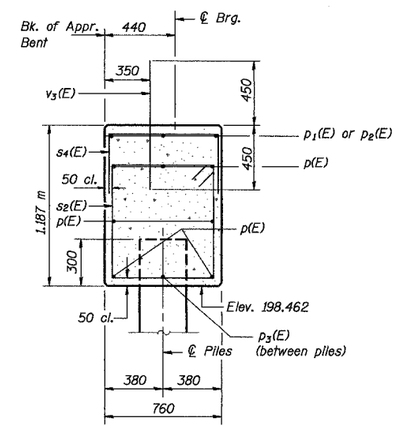

SECTION B-B

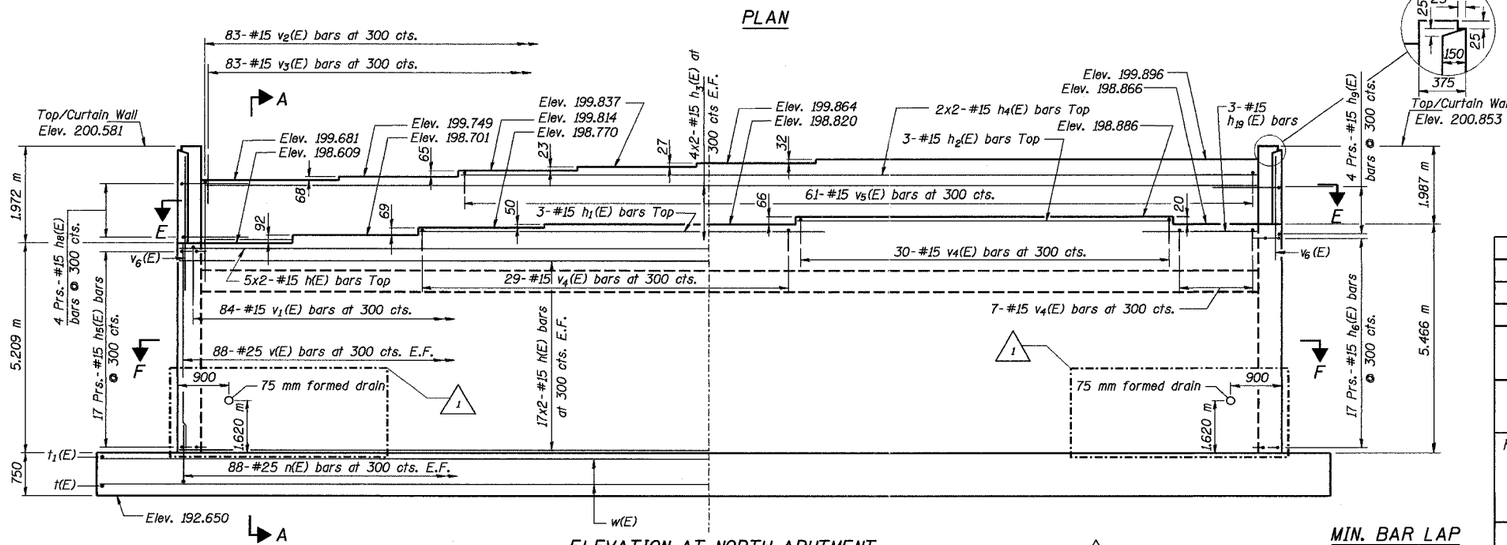

ELEVATION AT NORTH ABUTMENT

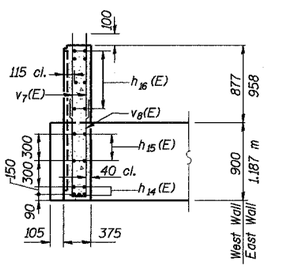

SECTION C-C

MIN. BAR LAP

#15 bar = 640

Designed by:	MBQ
Checked by:	DL
Drafted by:	FTE
Checked by:	DL

REVISION	DATE	DESCRIPTION
1	3/28/05	75 mm Drains Added

Revised MAY 27 2005

STATE OF ILLINOIS
DEPARTMENT OF TRANSPORTATION

NORTH ABUTMENT PLAN AND ELEVATION

RAMPS B-3 AND B-5 OVER WAR MEMORIAL DR. AND RAMP B-6
F.A.I. ROUTE 74 SECTION (72-7) R-3
PEORIA COUNTY STA. 10+618.61 (RAMP B-3)
STA. 10+472.60 (RAMP B-5)
STRUCTURE NUMBER 072-0190

PARSONS TRANSPORTATION GROUP
CHICAGO, ILLINOIS

DRAWING NO.	SCALE	DATE	SHEET NO.
21	N.T.S.	2-21-03	21

Date: 04/20/2005 Time: 03:16:51 PM

Filename: P:\643996\structural\072-0190\sheet\Tracings\AB0001-1A072090.dgn