68201

68201	ROUTE No.	SECTION	COUNTY	TOTAL SHEETS	SHEET NO.
	FAI 74	*	TAZEWELL	1366	546
	STA.		TO STA.		
	F.H.W.A. REGION		ILLINOIS	PROJECT	

SHEET 1 OF 56

B. M. EC4 : NW Cap Bolt FH E. side of Main SR between Commercial Ent to Mutual Wheel and private Ent to the North (184m S of EC6). Elev. 145.957

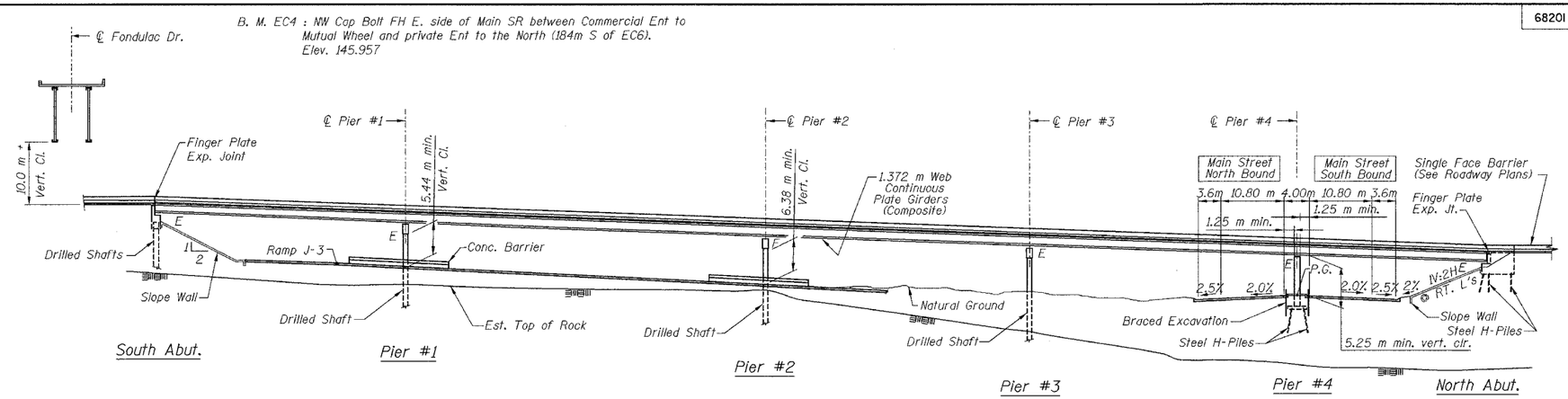

ELEVATION

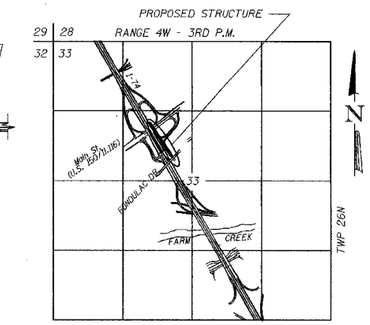

LOCATION SKETCH

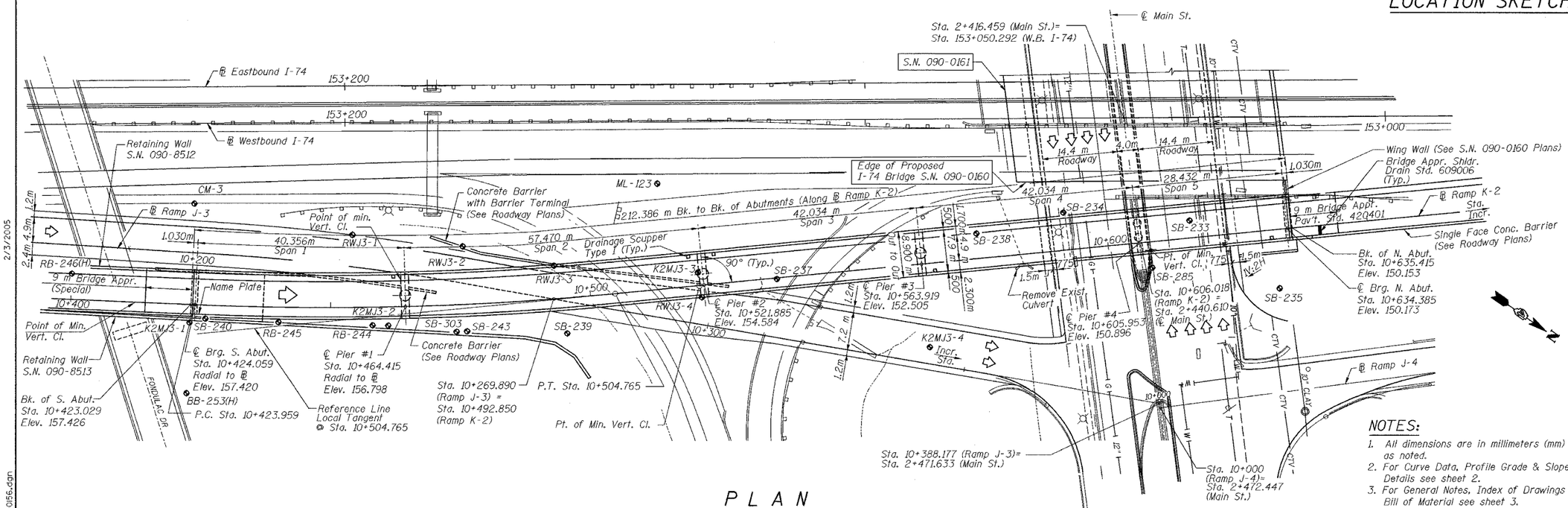

PLAN

NOTES:

1. All dimensions are in millimeters (mm) except as noted.
2. For Curve Data, Profile Grade & Slopewall Details see sheet 2.
3. For General Notes, Index of Drawings & Total Bill of Material see sheet 3.

DESIGN SPECIFICATIONS

2002 AASHTO (17th Edition)
2003 AASHTO Guide Specifications for Horizontally Curved Steel Girder Highway Bridges

LOADING MS18

Allow 2.4 kN/m² for future wearing surface.

DESIGN STRESSES

FIELD UNITS
f'c = 24 MPa
fy = 400 MPa (Reinf.)
fy = 345 MPa (Struct.) (M270 Grade 345)

SEISMIC DATA

Seismic Performance Category (SPC) = A
Bedrock Acceleration Coefficient (A) = 0.043
Site Coefficient (S) = 1.0

DESIGNED	KMP
CHECKED	KMP
DRAWN	VH
CHECKED	KMP

STATE OF ILLINOIS
DAVID J. MORRILL
81-4816
CHICAGO, IL
LICENSED STRUCTURAL ENGINEER
EXPIRATION DATE: 11-30-06
DATE 2-3-05

alfred benesch & company
CONSULTING ENGINEERS
205 NORTH MICHIGAN AVENUE, CHICAGO, ILLINOIS 60601
JOB NO. 3573

ILLINOIS DEPARTMENT OF TRANSPORTATION
RAMP K-2 OVER
MAIN ST & RAMP J-3
F.A.I. ROUTE 74 (I-74)
SECTION 90-IIHB-5

GENERAL PLAN AND ELEVATION

SN: 090-0156
TAZEWELL CO., IL.

STA. 10+529.222
DATE: 12-23-04

2/3/2005

m:\proj\3573\rampk2\stilgpl-7a0900156.dgn