FAP ROUTE	SECTION	COUNTY	TOTAL SHEETS	SHEET NO
664	*	SANGAMON	61	20
STA.		TO STA.		
EXISTING CONDITIONS:				

* D-6 RESURFACING 2005-1
CONTRACT NO. 72790

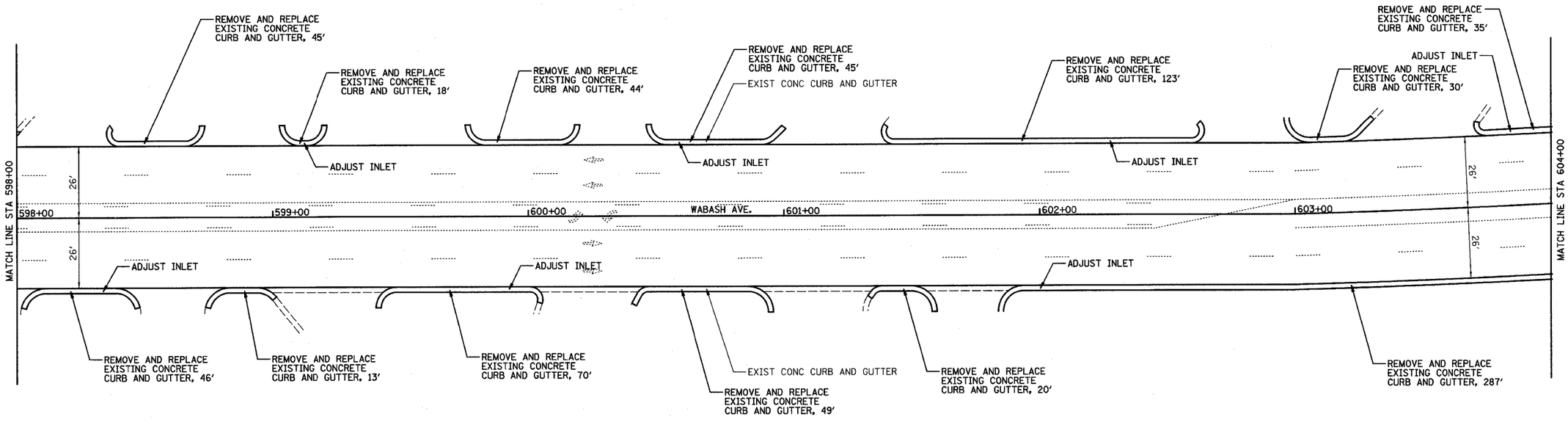

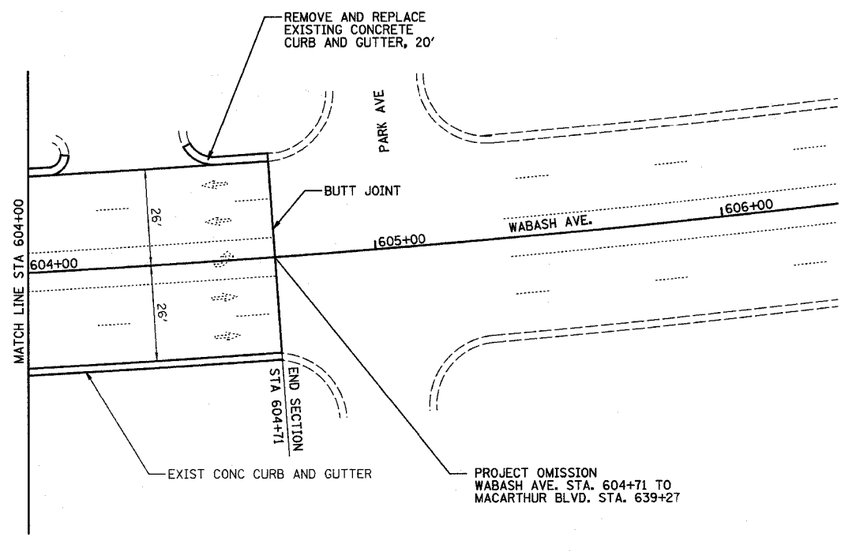

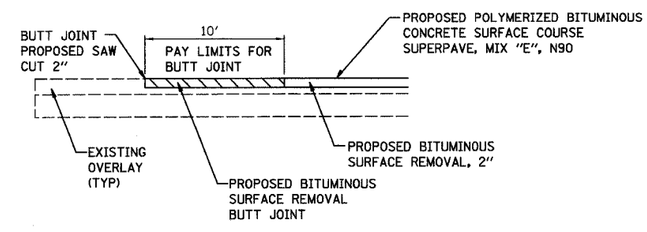

TYPICAL BUTT JOINT DETAIL

LEGEND

DIRECTION OF TRAFFIC

HOMER L. CHASTAIN & ASSOCIATES, LLP
CONSULTING ENGINEERS
DECATUR (217) 422-8544
CHICAGO (773) 714-0050
184-001397

REVISIONS	
NAME	DATE

ILLINOIS DEPARTMENT OF TRANSPORTATION
FAP ROUTE 664
(WABASH AVE & MACARTHUR BLVD)
SECTION D-6 RESURFACING 2005-1
SANGAMON COUNTY

ROADWAY PLAN

DRAWN BY: EMR CHECKED BY: GLF

PLOT DATE: $DATE$ $TIME$ $FILENAME$

WABASH STA 598+00 TO STA 606+00

PLAN
SURVEYED
PLOTTED
ALIGNMENT CHECKED
RT OF WAY CHECKED
NOTE BOOK
NO.
CADD FILE NAME
BY
DATE

$ROUTE$
$DATE-TIME$
$DGN-SPEC$
$REF-
$REF-