F.A.P. RTE.	SECTION	COUNTY	TOTAL SHEETS	SHEET NO.
664	*	SANGAMON	61	60
STA.		TO STA.		
FED. ROAD DIST. NO.	ILLINOIS	FED. AID PROJECT		

* D-6 RESURFACING 2005-1
CONTRACT NO. 72790

LENGTH OF SLACK FOR LOOP LEAD-INS SHALL PROVIDE FOR MAKING THE SPLICE ON TOP OF THE HANDHOLE AND ONE COMPLETE LOOP OF THE INTERIOR OF THE HANDHOLE. THE SPLICE SHALL BE SUPPORTED BY A CABLE HOOK.

THE LOOP LEAD-IN CONDUIT HOLES SHALL BE PLACED AS CLOSE TO THE CURB AS POSSIBLE TO PERMIT SAW OVERLAP WITHOUT SCARRING FACE OF CURB.
IN NON-CURB LOCATIONS THE DISTANCE SHALL NOT BE LESS THAN 6".

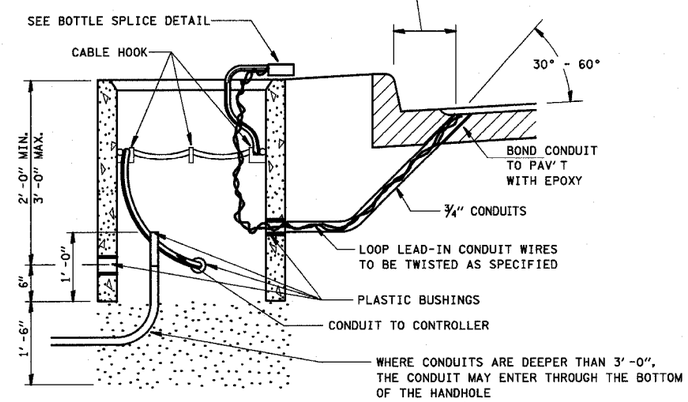

HANDHOLE CABLE CONNECTIONS

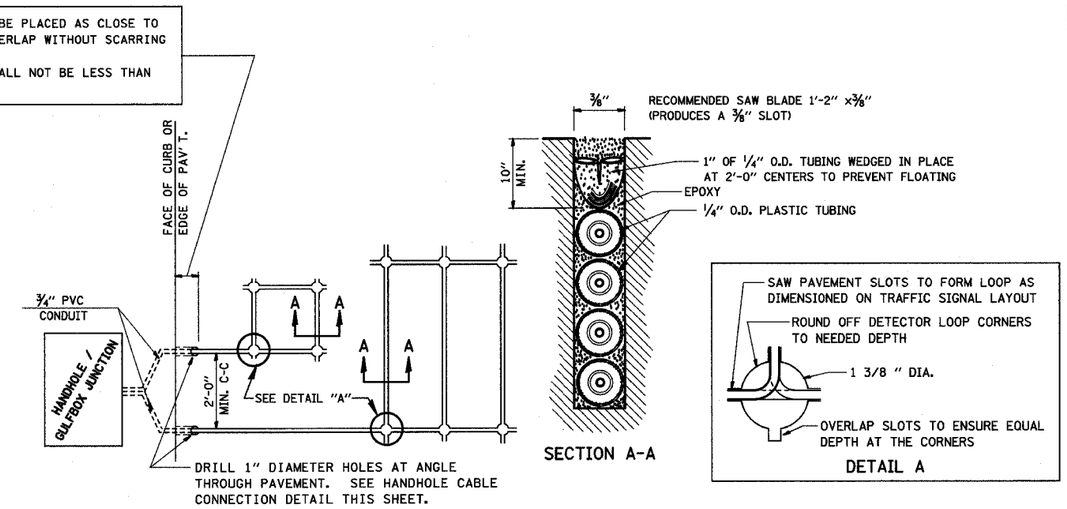

PAVEMENT SAWING DETAIL FOR TUBE ENCASED DETECTOR LOOP WIRE

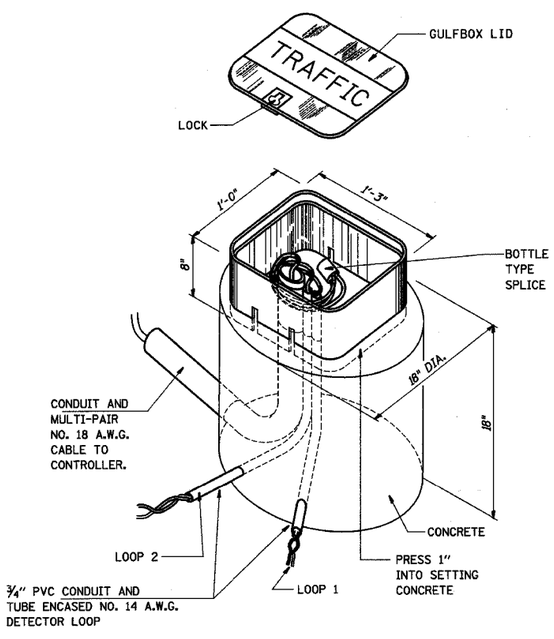

GULFBOX JUNCTION DETAIL

(SHOWING CONNECTION OF TUBE-ENCASED DETECTOR LOOP TO MULTI-PAIR LEAD-IN CABLE)

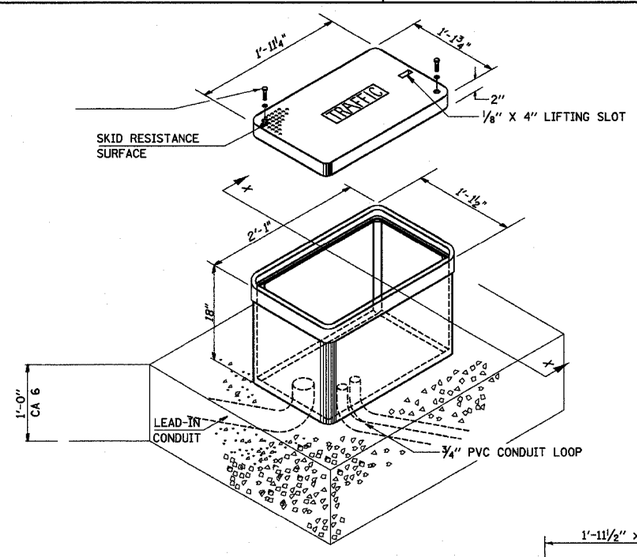

MINIMUM DIMENSIONS

JUNCTION BOX (SPECIAL)

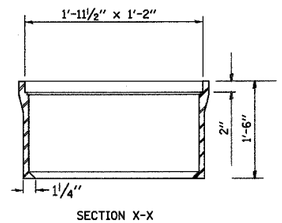

SECTION X-X

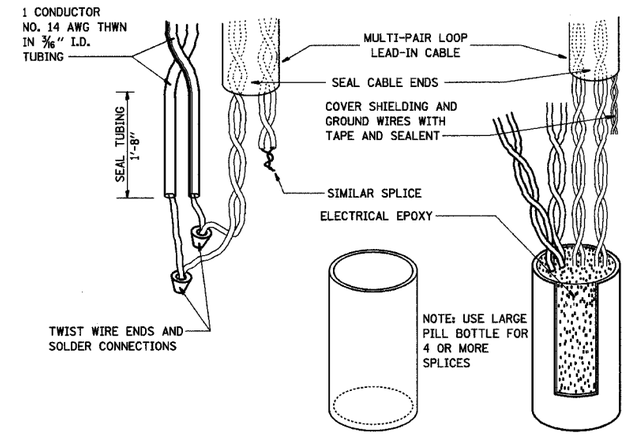

BOTTLE SPLICE DETAIL

REVISIONS	
NAME	DATE

ILLINOIS DEPARTMENT OF TRANSPORTATION
TRAFFIC SIGNAL
DETECTOR LOOP DETAILS