STATE OF ILLINOIS
DEPARTMENT OF TRANSPORTATION

ROUTE NO.	SECTION	COUNTY	TOTAL SHEETS	SHEET NO.
2758	*	LAKE	40	17
FED. ROAD DIST. NO.		ILLINOIS	FED. AID PROJECT-	

* 02-00025-00-BR

SHEET NO. - 7
30 - SHEETS
CONTRACT 83790

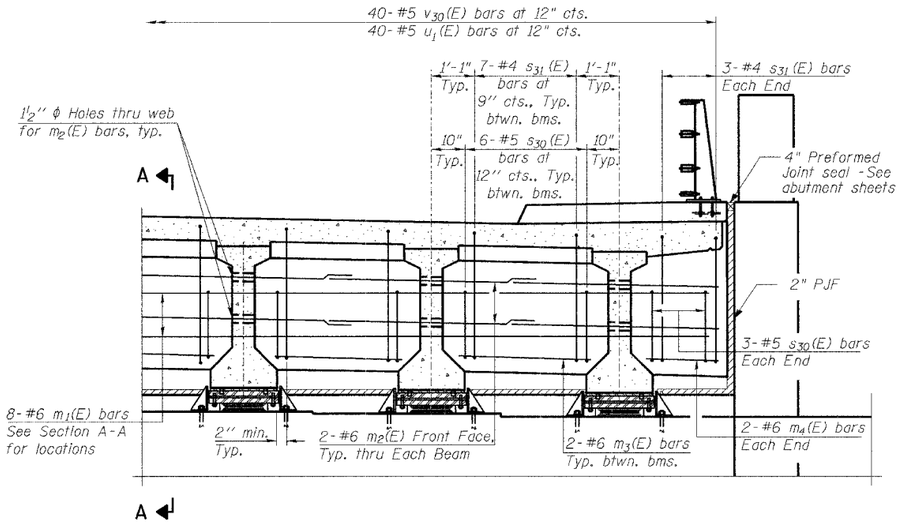

DIAPHRAGM ELEVATION AT N. & S. ABUTMENT

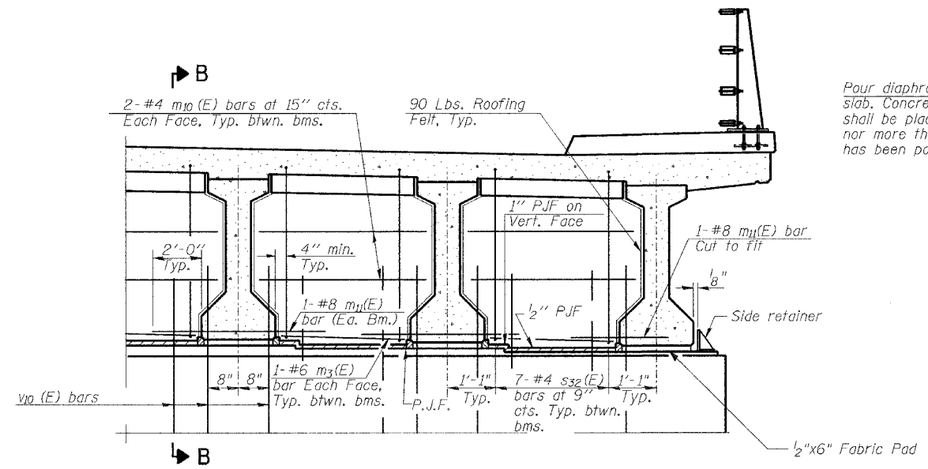

DIAPHRAGM ELEVATION AT PIERS 1 & 2

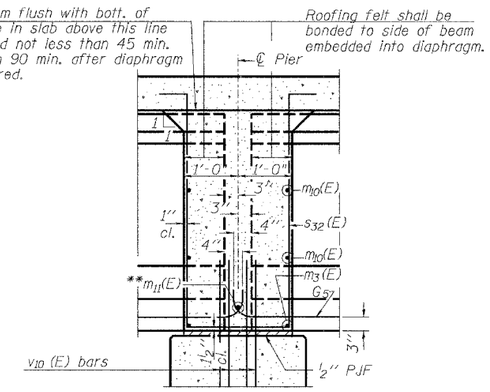

SECTION B-B

Dimensions along ℄ of beam, except as shown.

**Tie m_{11}(E) bar with No. 9 wire tightly fastened to prevent any movement between bars

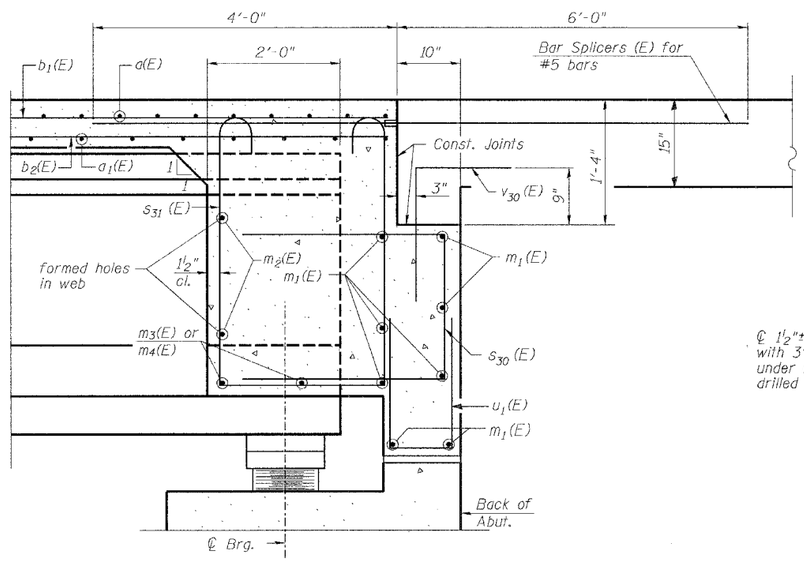

SECTION A-A

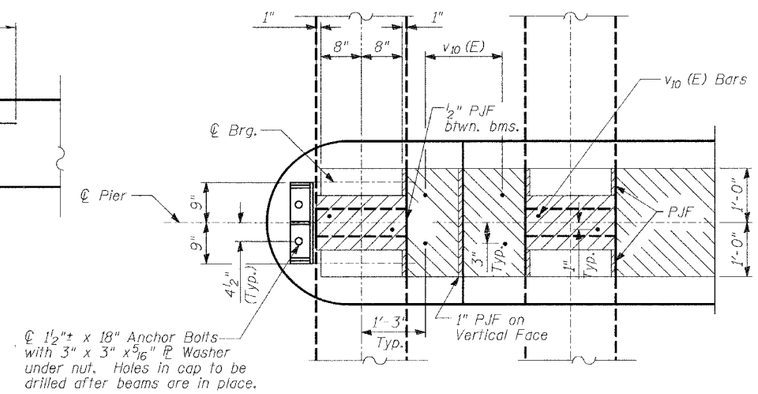

PLAN AT PIER

See Sheets 19-20 for locations of v_{10}(E) bars

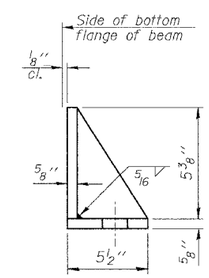

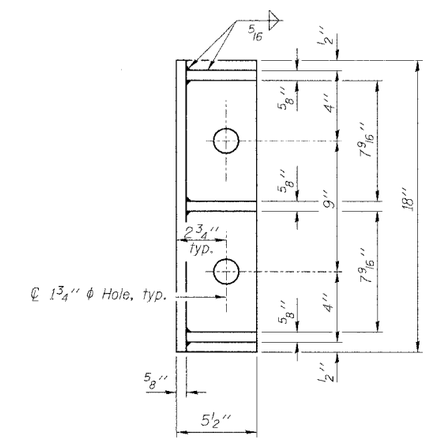

SIDE RETAINER

Equivalent rolled angle with stiffeners will be allowed in lieu of welded plates.

MIN. BAR LAP

#6 bar = 2'-9"

Notes:

Reinforcement bars in diaphragm are billed with superstructure on Sheet 6 of 30.

Concrete in diaphragm is included with Concrete Superstructure on Sheet 6 of 30.

For details of bars s_{30}(E), s_{31}(E) and s_{32}(E) see Sheet 6 of 29.

The s_{30}(E), s_{31}(E) and s_{32}(E) bars shall be placed parallel to the beams. Spacing for these bars shall be at right angles to the beams.

Cost of 90 Lb. roofing felt is included with Concrete Superstructure.

The side retainer shall be galvanized after shop fabrication according to AASHTO M 111 and ASTM A 385. Paid for as Furnishing & Erecting Structural Steel

See Sheet 21 of 30 for anchor bolt details.

TY-LIN INTERNATIONAL

DESIGNED	- DE SP
CHECKED	- SP
DRAWN	- SP
CHECKED	- PF

DATE: 02-23-2005

SUPERSTRUCTURE DETAILS 2

MOFFETT ROAD OVER
DRAINAGE RAVINE
FAU 2758
LAKE COUNTY
S.N. 049-6803

...\Structural\Superst.dgn 02/23/05 11:04:37 AM