F.A. RTE.	SECTION	COUNTY	TOTAL SHEETS	SHEET NO.
	04-00001-00-PV	DEKALB	43	22
STA.		TO STA.		
FED. ROAD DIST. NO.	ILLINOIS	FED. AID PROJECT		

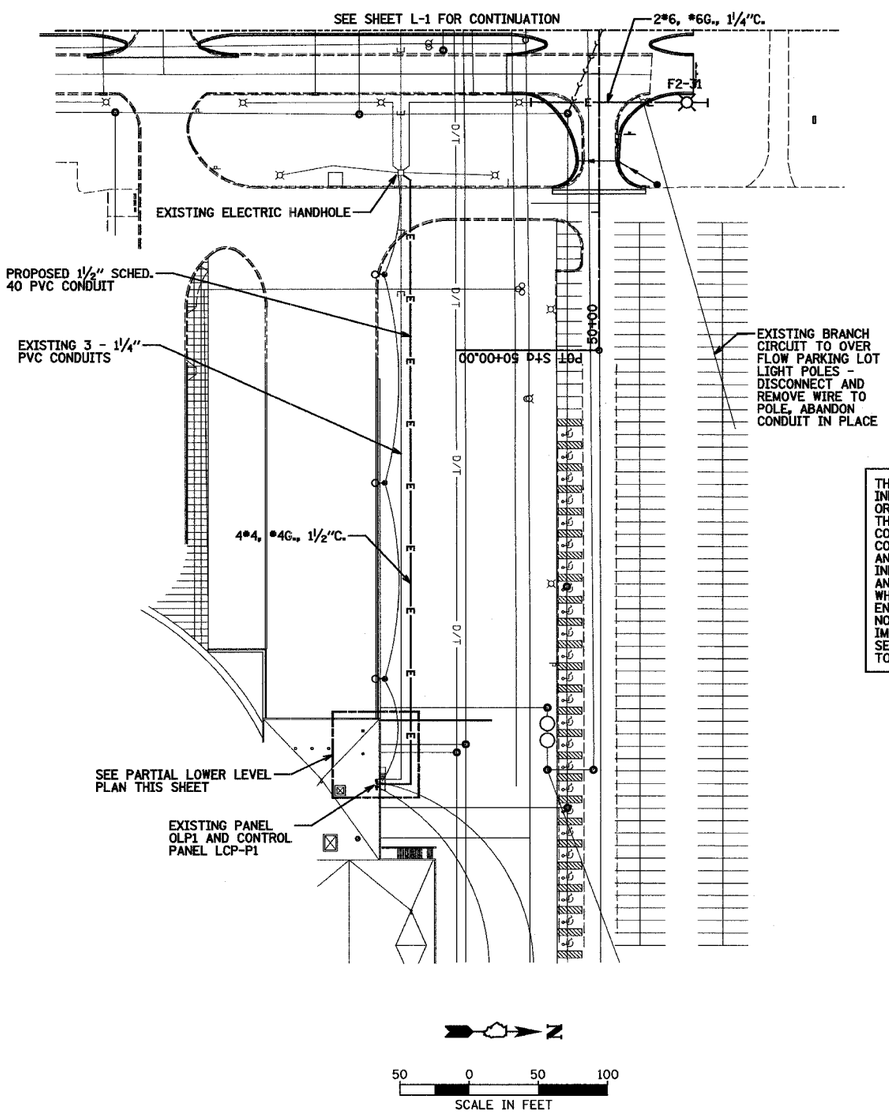

SUMMARY OF QUANTITIES - NIU WEST ACCESS ROAD		
LUMINAIRE, METAL HALIDE, CURVILINEAR, 400W (ARCHITECTURAL)	EACH	14
LIGHT POLE, STEEL 20 FT. M.H., SHORT BRACKET - 8 IN.	EACH	15
CONDUIT IN TRENCH, 1¼" DIA., PVC	LIN. FT.	1310
CONDUIT IN TRENCH 1½" DIA., PVC	LIN. FT.	445
CONDUIT PUSHED, 1¼" DIA., GLAVANIZED STEEL	LIN. FT.	250
CONDUIT PUSHED, 1½" DIA., GLAVANIZED STEEL	LIN. FT.	40
JUNCTION BOX ATTACHED TO STRUCTURE 10" x 8" x 4"	EACH	1
ELECTRIC CABLE IN CONDUIT, 600V (XLP-TYPE USE) 1/C, NO. 4	LIN. FT.	4800
ELECTRIC CABLE IN CONDUIT, 600V (XLP-TYPE USE) 1/C, NO. 6	LIN. FT.	6350
GROUNDING ELECTRODE BELOW GRADE	EACH	15
TRENCH AND BACKFILL FOR ELECTRIC WORK	LIN. FT.	1760
MODIFY EXISTING LIGHTING CONTROLLER	EACH	1
LIGHT POLE FOUNDATION	EACH	15
LIGHTING FOUNDATION REMOVAL	EACH	1
REMOVAL OF EXISTING LIGHTING UNIT, SALVAGE	EACH	1
RELOCATE EXISTING LUMINAIRE	EACH	1
MAINTENANCE OF LIGHTING SYSTEM	EACH	1
CONDUIT ENCASED, REINFORCED CONCRETE, 5" DIA. PVC 3 WIDE x 2 HIGH	LIN. FT.	75

THE LOCATION, SIZE AND TYPE OF MATERIAL OF EXISTING UNDERGROUND UTILITIES INDICATED ON THE PLANS IS NOT REPRESENTED AS BEING ACCURATE, SUFFICIENT OR COMPLETE. IT SHALL BE THE CONTRACTOR'S RESPONSIBILITY TO DETERMINE THE ACTUAL LOCATION OF ALL SUCH FACILITIES, INCLUDING THE SERVICE CONNECTIONS TO UNDERGROUND UTILITIES. PRIOR TO CONSTRUCTION THE CONTRACTOR SHALL NOTIFY THE UTILITY COMPANIES OF HIS OPERATIONAL PLANS AND SHALL OBTAIN FROM THE RESPECTIVE UTILITY COMPANIES DETAILED INFORMATION AND ASSISTANCE RELATIVE TO THE LOCATION OF THEIR FACILITIES AND THE WORKING SCHEDULE OF THE COMPANIES FOR REMOVAL OR ADJUSTMENT WHERE REQUIRED. IN THE EVENT AN UNEXPECTED UTILITY INTERFERENCE IS ENCOUNTERED DURING CONSTRUCTION, THE CONTRACTOR SHALL IMMEDIATELY NOTIFY THE UTILITY COMPANY OF JURISDICTION. THE ENGINEER SHALL ALSO BE IMMEDIATELY NOTIFIED. ANY SUCH MAINS AND SERVICES SHALL BE RESTORED TO SERVICE AT ONCE AND PAID FOR BY THE CONTRACTOR AT NO ADDITIONAL COST TO THE CONTRACT.

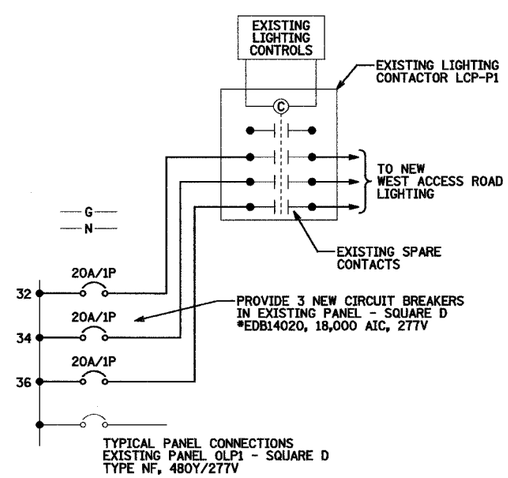

EXTERIOR LIGHTING CONTROL DIAGRAM

NOT TO SCALE

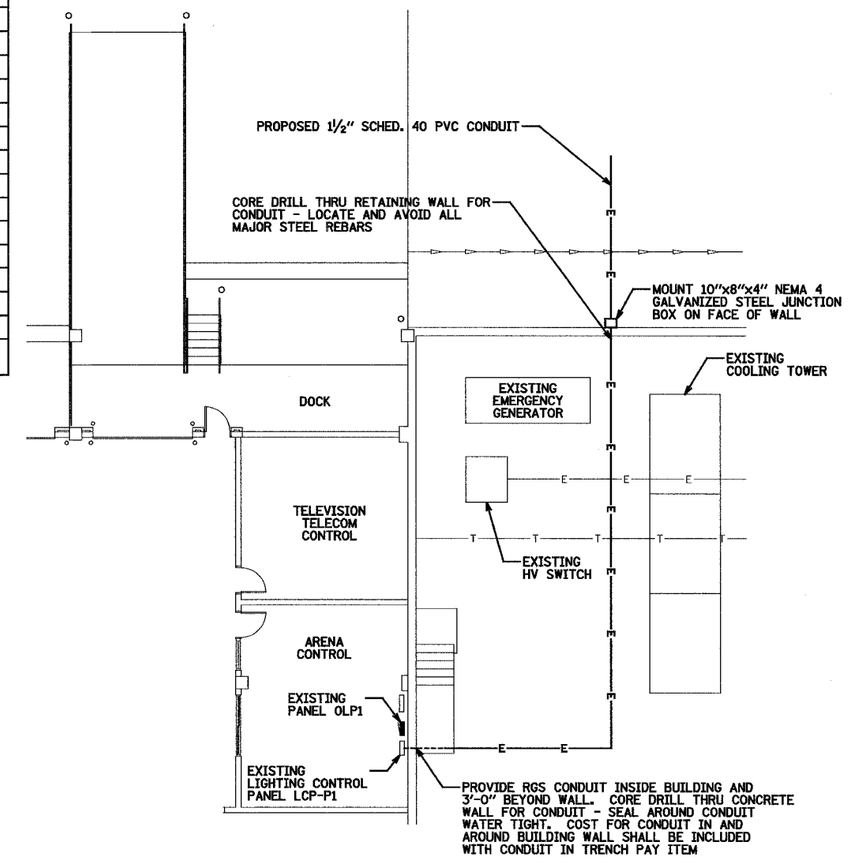

PARTIAL LOWER LEVEL PLAN

NOT TO SCALE

HANSON
Hanson Professional Services Inc.
© Copyright Hanson Professional Services Inc. 2005

LAYOUT	PJT	.../.../...	mwh
DRAWN	ANC	.../.../...	04/14/2005
REVIEWED	PJT	.../.../...	I:\04085\04189\Civil\Sheet\E0102.dgn

REVISIONS	
NAME	DATE

ILLINOIS DEPARTMENT OF TRANSPORTATION

SECTION 04-00001-00-PV
DEKALB COUNTY
NORTHERN ILLINOIS UNIVERSITY WEST ACCESS ROAD

ROADWAY LIGHTING PLAN

L-2

SCALE: VERT. 1"=50'-0"
HORIZ.
DATE 04/05/05

DRAWN BY ANC
CHECKED BY PJT