STATE OF ILLINOIS
DEPARTMENT OF TRANSPORTATION

ROUTE NO.	SECTION	COUNTY	TOTAL SHEETS	SHEET NO.
FAP 315	18B-1	FULTON		220
FED. ROAD DIST. NO. 7	ILLINOIS	FED. AID PROJECT-		

SHEET NO. 11
13 SHEETS

Contract #88753

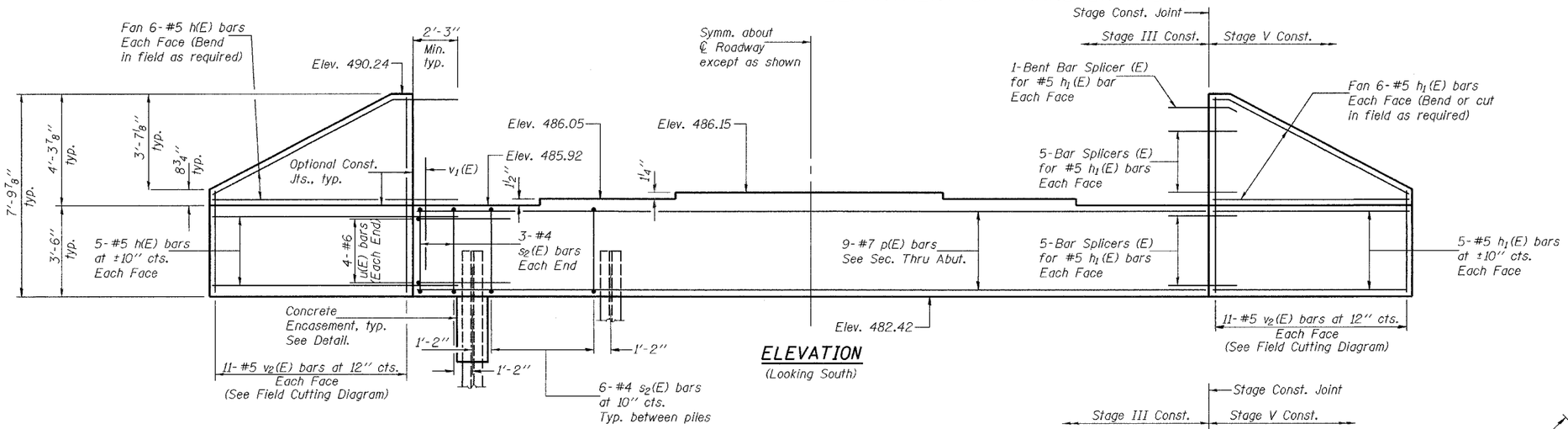

ELEVATION
(Looking South)

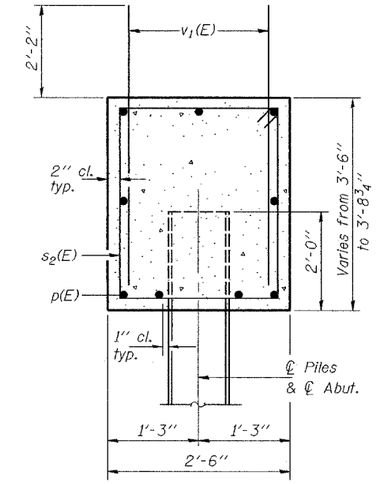

SEC. THRU ABUT.

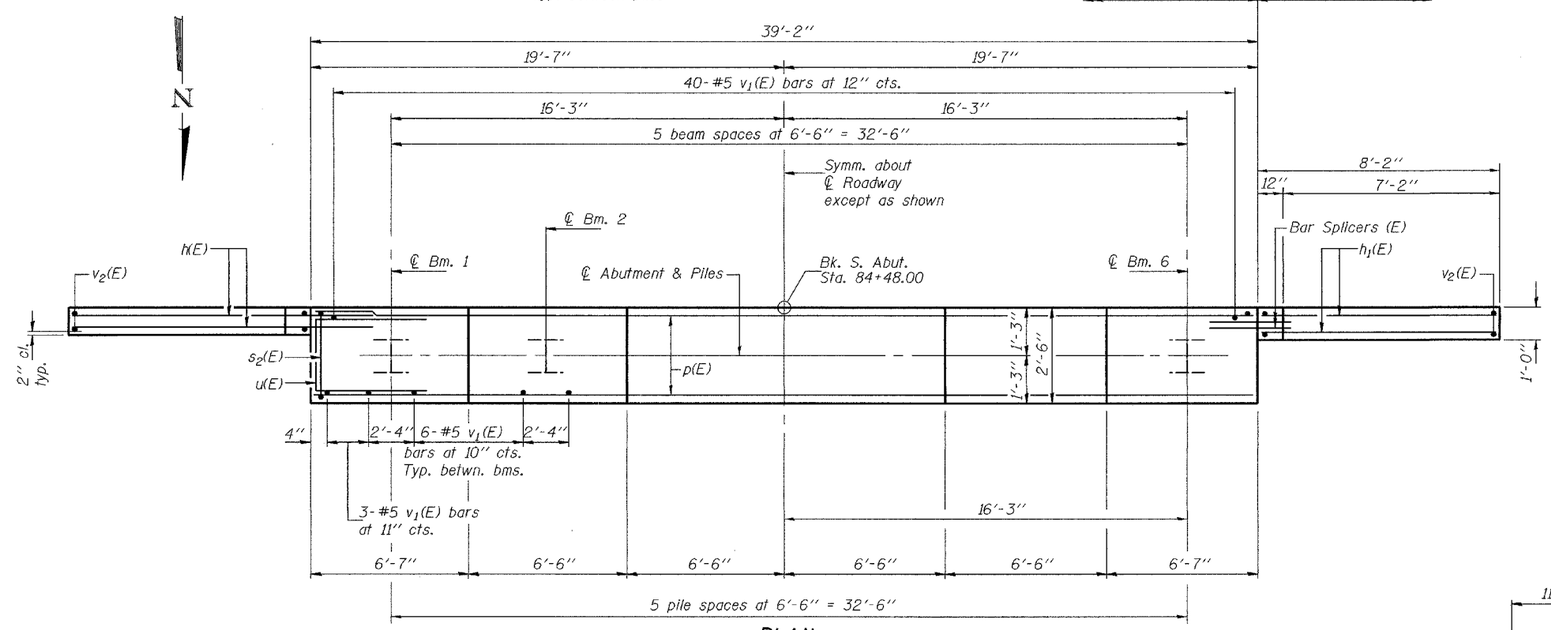

PLAN

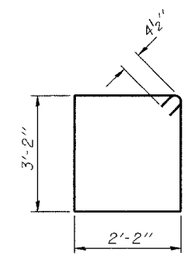

BAR s_2(E)

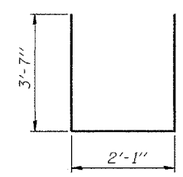

BAR u(E)

BILL OF MATERIAL

Bar	No.	Size	Length	Shape
h(E)	22	#5	11'-1"	
h_1(E)	22	#5	8'-8"	
p(E)	9	#7	38'-10"	
s_2(E)	36	#4	11'-5"	
u(E)	8	#6	9'-3"	
v_1(E)	76	#5	4'-4"	
v_2(E)	22	#5	11'-5"	
Structure Excavation			Cu. Yd.	190
Concrete Structures			Cu. Yd.	16.9
Reinforcement Bars, Epoxy Coated			Pound	2160
Furnishing Steel Piles HP12x53			Foot	175
Driving Steel Piles			Foot	175
Test Pile Steel HP12x53			Each	1

Notes:
Pour steps monolithically with cap.
Reinforcement bars designated (E) shall be epoxy coated.
For bar splicer (E) details, see sheet 12 of 13.

PILE DATA

Type: Steel HP12x53
Capacity: Driven to refusal
Est. Length: 35'
No. Required: 5 + 1 test pile

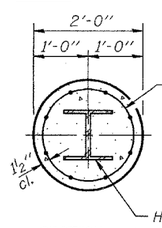

SECTION A-A

Welded wire fabric 6x6-W4.0xW4.0 weighing 58#/100 sq. ft. The cost of excavation, Concrete Encasement and reinforcement is included with furnishing piles. Forms for encasement may be omitted when soil conditions permit.

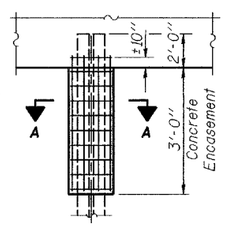

PILE ENCASEMENT DETAIL

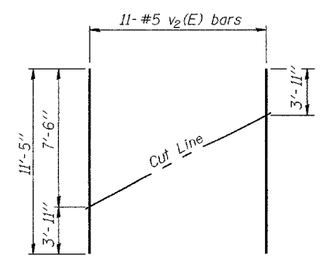

FIELD CUTTING DIAGRAM

Order v_2(E) bars full length. Cut as shown and use remainder of bars in opposite face.

DESIGNED	Stephen M. Ryan
CHECKED	SJB & SEM
DRAWN	R. Doty ØMC
CHECKED	SMR/SJB/SEM

April 11, 2005
EXAMINED Thomas J. Domagalski
ENGINEER OF BRIDGE DESIGN
PASSED Ralph E. Anderson
ENGINEER OF BRIDGES AND STRUCTURES

SOUTH ABUTMENT
F.A.P. RT. 315 SEC. 18B-1
FULTON COUNTY
STATION 84+17.00
STRUCTURE NO. 029-0060

...\projects\bm100029\0250060.dgn 4/11/2005 11:30:14 AM