CONTRACT NO. 88753

F.A.P. RTE.	SECTION	COUNTY	TOTAL SHEETS	SHEET NO.
317	***	FULTON	684	245
STA.		TO STA.		
FED. ROAD DIST. NO.	ILLINOIS	FED. AID PROJECT		

*** 181,(18BRY&18BRY-1)BR,18B-1

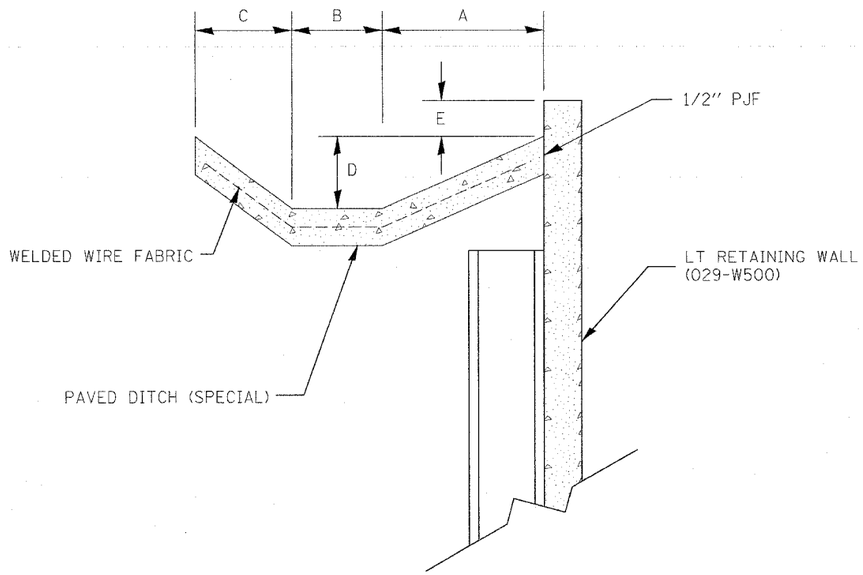

SECTION A-A
STA 81+60 TO 81+90

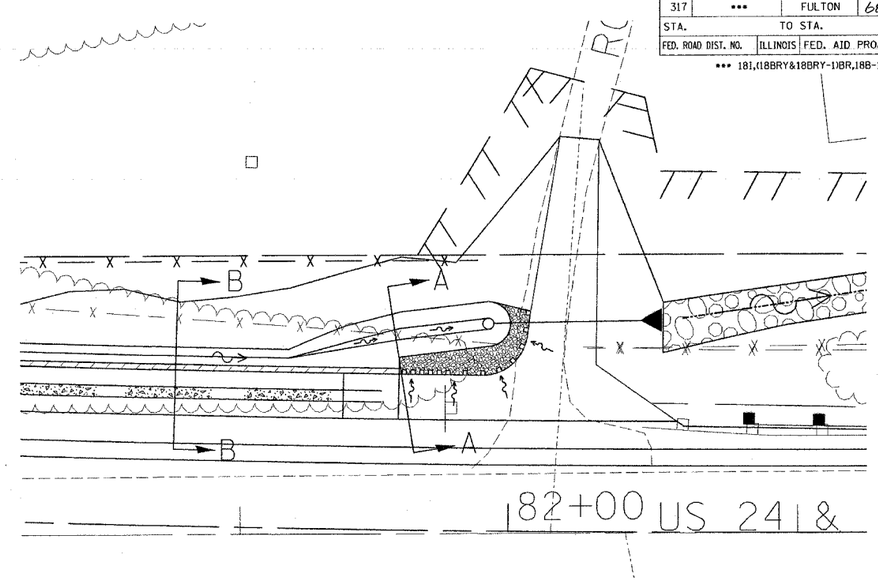

STATION	A	B	C	D	E
81+60	18	0	18	3	5.5
81+70	39	12	36	6	8
81+80	60	24	36	6	30
81+90	36	24	36	6	0

STATION	F
79+60 TO 80+50	2
80+60	2 3/8
80+70	2 3/4
80+80	3 1/8
80+90	3 1/2
81+00	3 7/8
81+10	4 3/16
81+20 TO 81+60	2

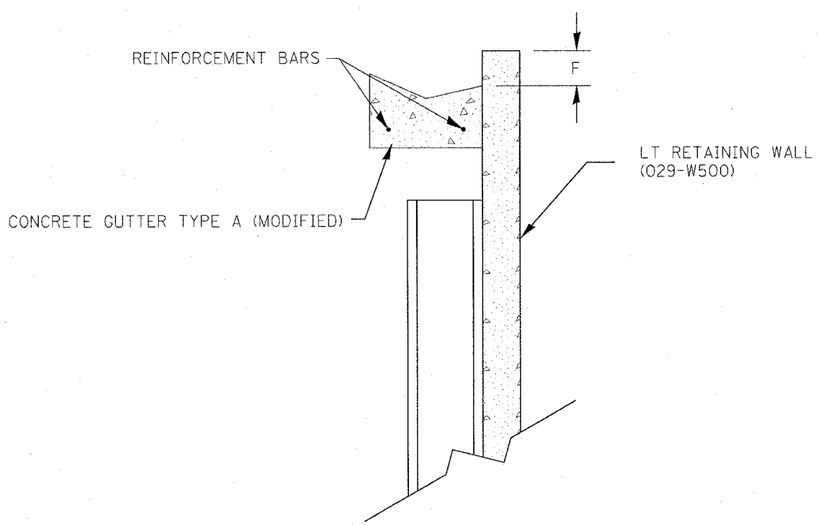

SECTION B-B
STA 79+60 TO 81+60

NOTES

1. ALL DIMINSIONS ARE IN INCES UNLESS OTHERWISE SPECIFIED
2. CONCRETE GUTTER TYPE A (MODIFIED) AND PAVED DITCH (SPECIAL) SHALL BE POURED MONOLITHICALLY INCLUDING THE APRON AROUND THE MEDIAN INLET (SPECIAL)
3. FINISH SHALL BE A RAKED FINISH ALONG THE LENGTH OF THE TYPE A GUTTER AND PAVED DITCH (SPECIAL)
4. CONSTRUCTION SHALL BE ACCORDING TO SECTION 606 UNLESS OTHERWISE NOTED IN THE PLANS

REVISIONS	
NAME	DATE

ILLINOIS DEPARTMENT OF TRANSPORTATION

PAVED DITCH SPECIAL DETAIL

SCALE: VERT. HORIZ.
DATE
DRAWN BY
CHECKED BY

PLOT DATE = 4/7/2005
FILE NAME = c:\projects\us24spoon_ph_2\detail_paveddtch.dgn
PLOT SCALE = 50.0000 ' / IN.
USER NAME = heggtemd