ROUTE NO.	SECTION	COUNTY	TOTAL SHEETS	SHEET NO.
TR 38	*	Vermilion	18	10
FED. ROAD DIST. NO. 7		ILLINOIS	FED. AID PROJECT-	

91306 *00-19134-00-BR

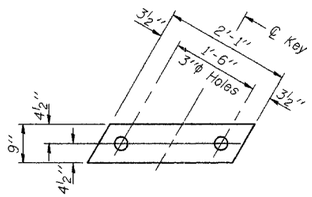

FABRIC BEARING PAD
(Interior)

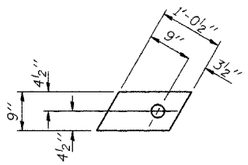

FABRIC BEARING PAD
(Exterior)

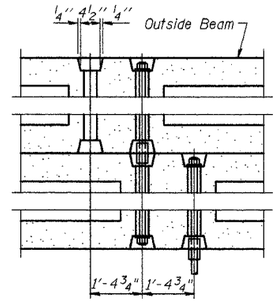

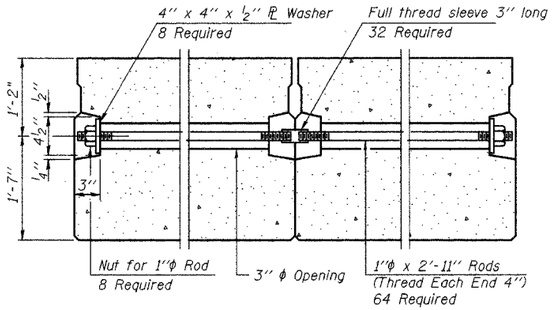

TYPICAL TRANSVERSE TIE ASSEMBLY

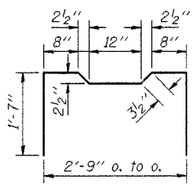

BAR A_1

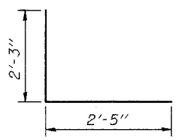

BAR D

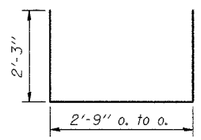

BARS U & U_1

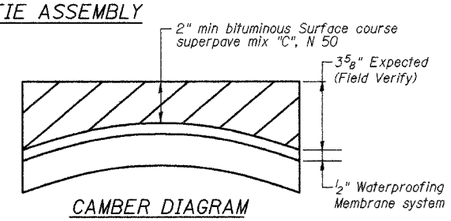

CAMBER DIAGRAM

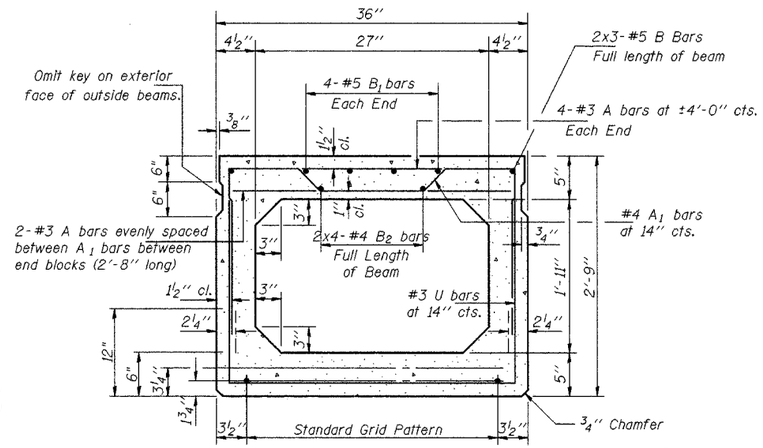

TYPICAL SECTION

20-½"φ Strands Each Strand Stressed to 28,900 Lbs.
8-Strands 1¾" up, 8-Strands 3¼" up,
2-Strands 6" up, 2-Strands 12" up

Note: Place strands symmetrically about ℄ of beam.

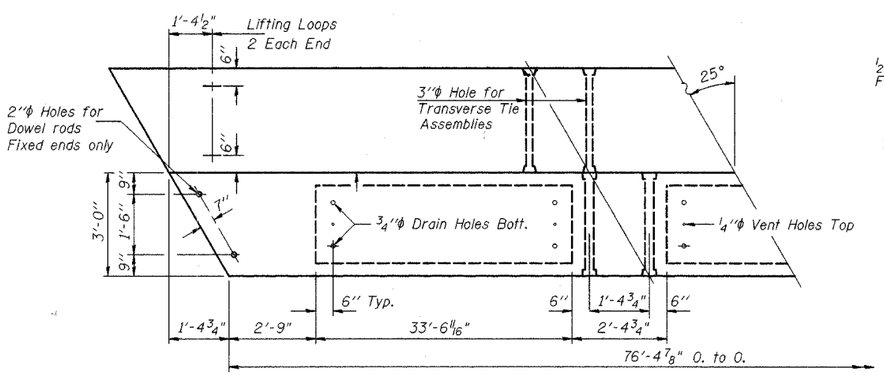

PLAN

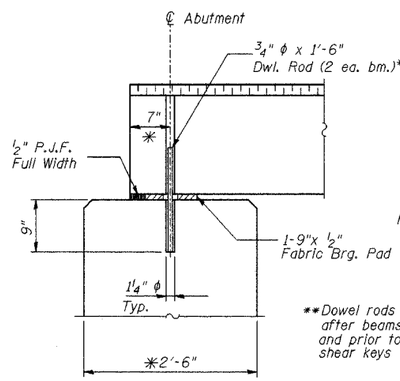

SECTION AT ABUTMENT

* Perpendicular to ℄ of abutment.

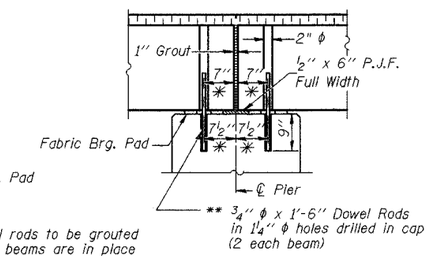

**Dowel rods to be grouted after beams are in place and prior to grouting the shear keys

SEC. THRU PIER

* Perpendicular to ℄ of Pier

1" Joint shall be packed with a very dry mix of 2:1 sand and P.C. mortar.
1" Dimension may vary plus or minus to accomodate tolerance in beam lengths.

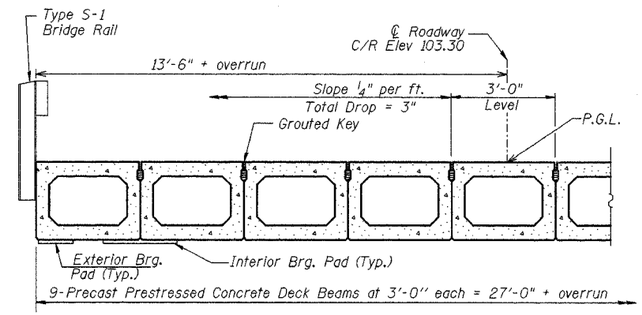

HALF CROSS SECTION

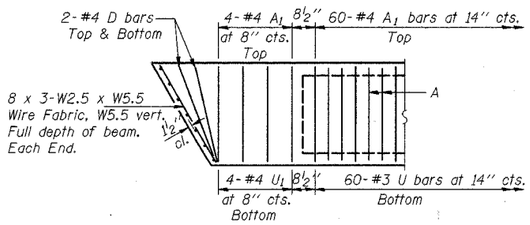

END PLAN

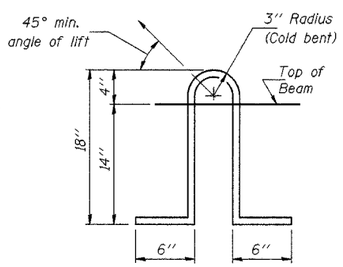

LIFTING LOOP DETAIL

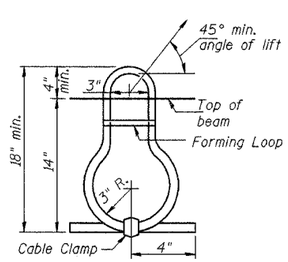

LIFTING LOOP ALTERNATE

NOTES

Prestressing steel shall be uncoated high strength, stress-relieved 7-wire strand, Grade 270.

The nominal diameter shall be ½" and the nominal cross-sectional area shall be 0.153 sq. in.

Lifting loops shall be ⅞" diameter, 6 x 25 class wire rope with fiber core and shall have a minimum ultimate tensile strength of 63,000 or 4-½"φ-270 ksi strands, as shown.

The 1" φ rods in the transverse tie assembly shall be tightened to a snug fit and the threads set. Pockets that receive transverse tie bar on outside shall be filled with grout after transverse tie assembly is in place.

Reinforcement bars shall conform to the requirements of AASHTO M-31, M-42 or M-53 Grade 60.

The bearing seat surfaces shall be adjusted by shimming to assure firm and even bearing. Two ⅛" fabric adjusting shims of the dimensions of the Exterior Bearing Pad shall be provided for each bearing.

Keyway surfaces shall be cleaned to remove form oil or other bond breaking material prior to shipment of the beams. Cleaning shall be done by sandblasting the keyway areas between top of the beam and the bottom edge of the key.

A Calcium Nitrite Corrosion Inhibitor, as covered in the Special Provisions, shall be used in the concrete for precast prestressed concrete deck beams.

Required Release Strength, f'ci, shall be 4100 p.s.i.

An equal substitution of the low-relaxation strands for the stress-relieved strands will be permitted.

BILL OF MATERIAL (One Beam)

Bar	No.	Size	Length	Shape
A	122	#3	2'-8"	—
A_1	68	#4	6'-1"	⊓
B	6	#5	26'-10"	—
B_1	8	#5	15'-4"	—
B_2	8	#4	20'-5"	—
D	8	#4	4'-8"	L
U	60	#3	7'-3"	⊔
U_1	8	#4	7'-3"	⊔
Precast Prestressed Conc. Deck Bms.			Sq. Ft.	8252*

*Total Quantity of Beams

DSGN L.A. Rolf					
DR L.A. Rolf					
CHK K.E. Brandau					
APVD K.E. Brandau	NO.	DATE	REVISION	BY	APVD

Revised 5/25/05

FRAUENHOFFER
Frauenhoffer and Associates, P.C. Consulting Engineers
3002 Crossing Court Champaign, IL 61822 217-351-6268

SUPERSTRUCTURE
VANCE ROAD DISTRICT
SECTION 00-19134-00-BR
VERMILION COUNTY

SHEET 10
DWG NO. van-sup.dgn
DATE AUG2004
PROJ NO. 2088