MARKING QUANTITIES

DESCRIPTION	UNIT AREA	NO. REQUIRED	WHITE (S.F.)	YELLOW (S.F.)	BLACK (S.F.)
RUNWAY ℄ STRIPE (SOLID)	360	16	5,760		
RUNWAY ℄ STRIPE (BORDER)	124	16			1,984
TAXIWAY AND TURN AROUND ℄ STRIPE (SOLID)	2,177	1		2,177	
TAXIWAY AND TURN AROUND ℄ STRIPE (BORDER)	2,195	1			2,195
NUMBER 2 (SOLID)	652	1	652		
NUMBER 2 (BORDER)	106	1			106
NUMBER 7 (SOLID)	471	1	471		
NUMBER 7 (BORDER)	85	1			85
NUMBER 9 (SOLID)	712	1	712		
NUMBER 9 (BORDER)	114	1			114
TAXIWAY HOLD LINES (SOLID)	104	2		208	
TAXIWAY HOLD LINES (BORDER)	176	2			352
TURN AROUND HOLD LINES (SOLID)	76	2		152	
TURN AROUND HOLD LINES (BORDER)	124	2			248
THRESHOLD STRIPE (SOLID)	862.5	4	3,450		
THRESHOLD STRIPE (BORDER)	176.75	4			627
		TOTAL	11,045	2,537	5,711
					TOTAL AREA
PAVEMENT MARKING – WATERBORNE					13,582
PAVEMENT MARKING – BLACK BORDER					5,711

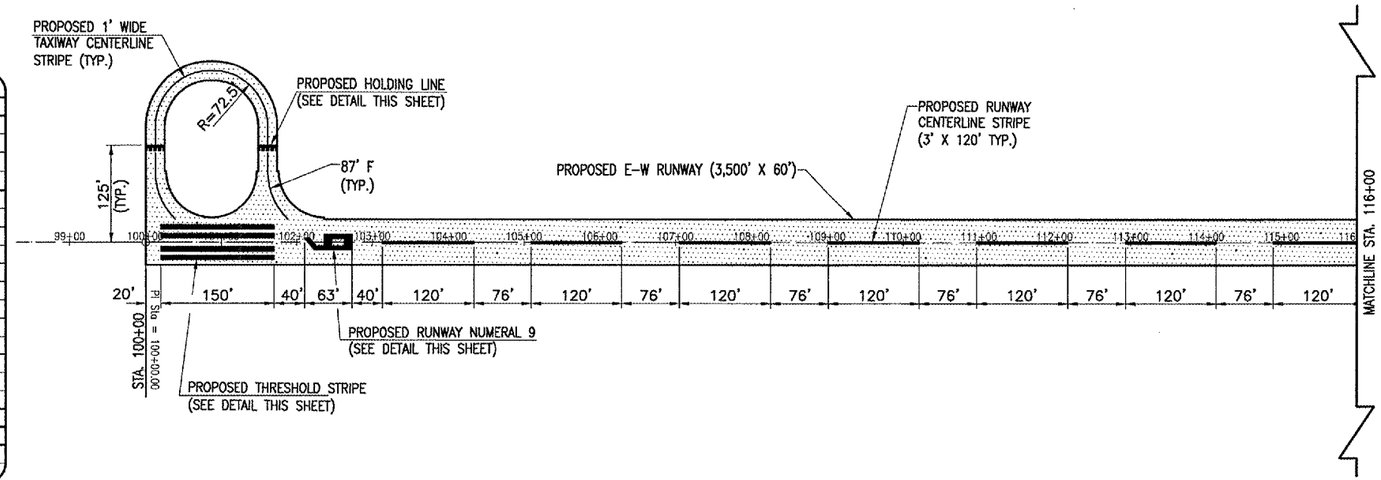

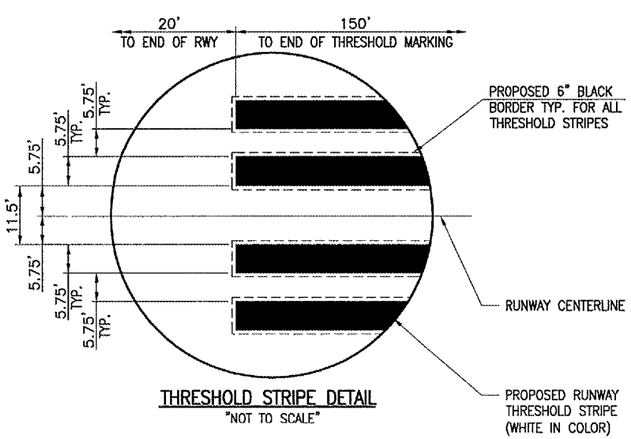

THRESHOLD STRIPE DETAIL
"NOT TO SCALE"

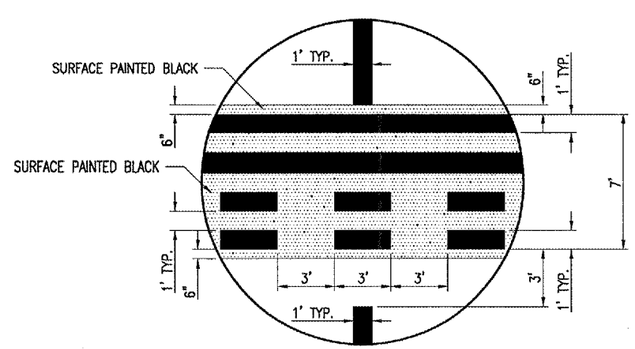

HOLDING POSITION DETAIL
"NOT TO SCALE"

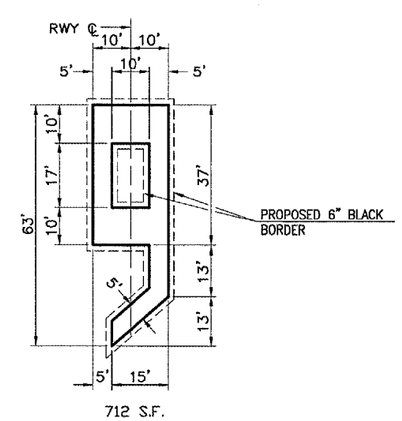

PROPOSED NUMERAL DETAILS
"NOT TO SCALE"

LEGEND

- EXISTING IMPROVEMENTS
- PROPOSED IMPROVEMENTS
- PROPOSED MARKING

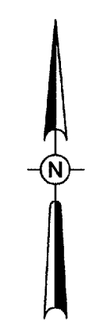

0' 50' 100' 200'
HALF SIZE SCALE 1"= 200'
FULL SIZE SCALE 1"= 100'

DATE	REVISION	BY

TAYLORVILLE MUNICIPAL AIRPORT
TAYLORVILLE, ILLINOIS

A.I.P. PROJ.: 3-17-0100-B7
IL PROJ.: TAZ-3166

HEI Project No. 828-03RWYGD.0800
Filename: R-151MRK.DWG
Scale: 1" = 100'
Date: 02/05/04

LAYOUT	JMB	02/05/04
DRAWN	JMB	02/05/04
REVIEWED	CAH	03/28/05

HANSON
Hanson Professional Services Inc.
1525 South Sixth Street
Springfield, Illinois 62703-2888
Offices Nationwide

CONSTRUCT RUNWAY 9-27
PROPOSED MARKING PLAN
STA. 100+00 TO STA. 116+00

APR 22, 2005 11:09 AM RAW
I:\AIRPORTS\TVILLE\828-03RWYGD\AIRPORT\SHEETS\R-151MRK.DWG – STA. 100+00 TO STA. 116+00