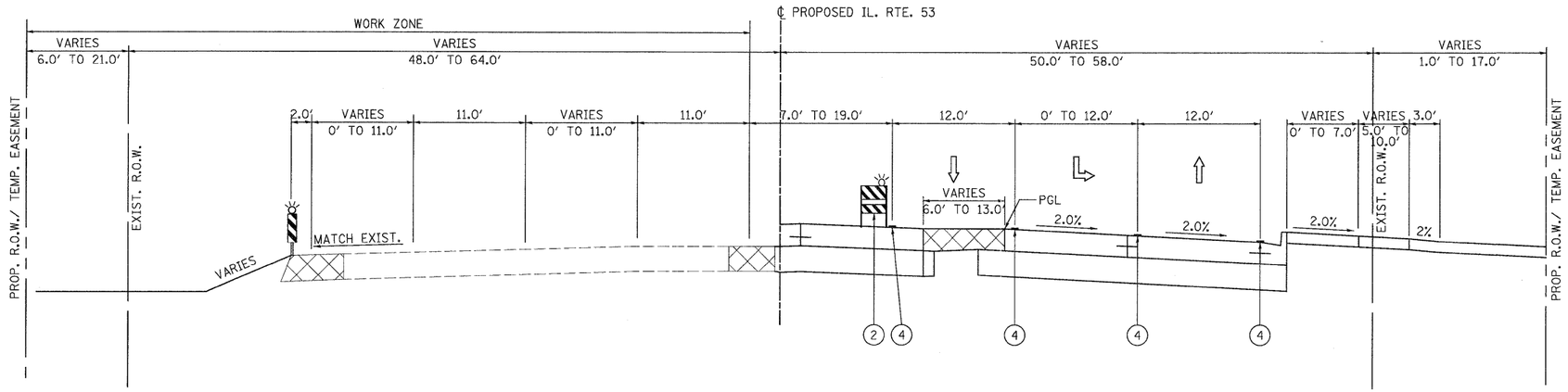

STAGE 2 - PHASE 1
STA. 50+00.00 TO STA. 64+28.99

LEGEND

1. TEMPORARY PAVEMENT (SEE SPECIAL PROVISION)
2. TYPE II BARRICADES WITH STEADY BURNING LIGHTS (50 FT C-C TANGENTS, 25 FT C-C @ TAPERS & 12 FT C-C ALONG RADII)
3. VERTICAL PANELS WITH STEADY BURNING LIGHTS @ 50 FT C-C
4. WET TEMPORARY PAVEMENT MARKING TAPE
5. VERTICAL BARRICADES WITH STEADY BURNING LIGHTS (50 FT C-C @ TANGENTS, 25 FT C-C @ TAPERS & 12 FT C-C ALONG RADII)

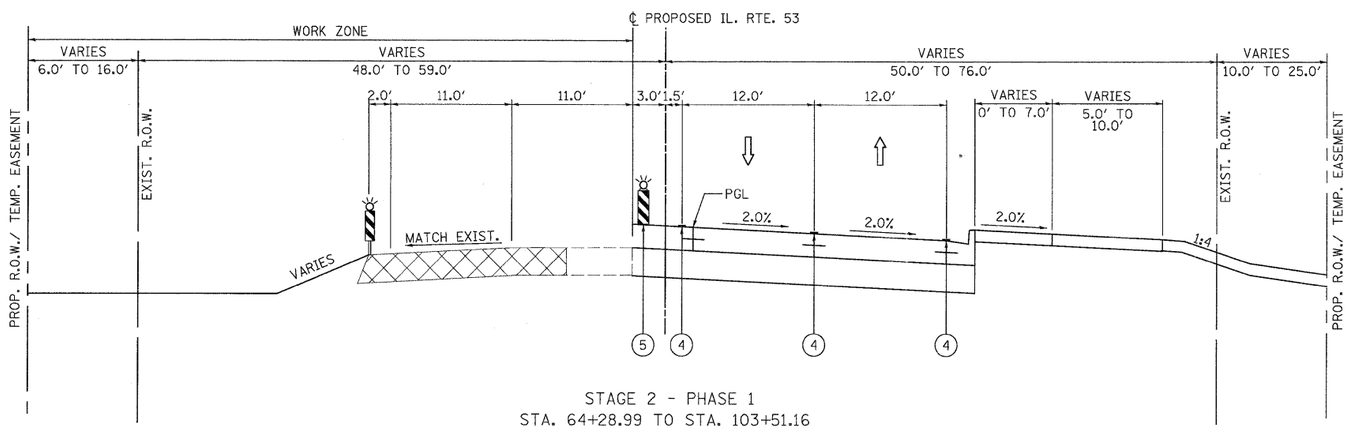

STAGE 2 - PHASE 1
STA. 64+28.99 TO STA. 103+51.16

PATRICK ENGINEERING INC.
4970 VARSITY DRIVE
LISLE, IL 60532
patrickengineering.com
PATRICK ENGINEERING

USER NAME = okersten(Lisle_R)	DESIGNED - MJV	REVISED -	
PLOT CONFIG= PDF(Grey_Large).pit	DRAWN - EJB	REVISED -	
PLOT SCALE = 1:6.66667	CHECKED - CPK	REVISED -	
PLOT DATE = 12/3/2010	DATE - 12/3/2010	REVISED -	

Illinois Department of Transportation

ILLINOIS ROUTE 53
SUGGESTED MAINTENANCE OF TRAFFIC
TYPICAL SECTIONS – STAGE 2 PHASE 1

SCALE: 1"=50' | SHEET MOT-10 OF 136 | STA. | TO STA.

F.A. RTE.	SECTION	COUNTY	TOTAL SHEETS	SHEET NO.
2578	532B	DUPAGE	781	116
		CONTRACT NO. 60477		
FED. ROAD DIST. NO.	ILLINOIS	FED. AID PROJECT		

D:\IDOT\9356_A2_(IL53)\Drawings\CADD Sheets\D19139797-sht-stagingtypical_110-171.dgn