11-02-2009

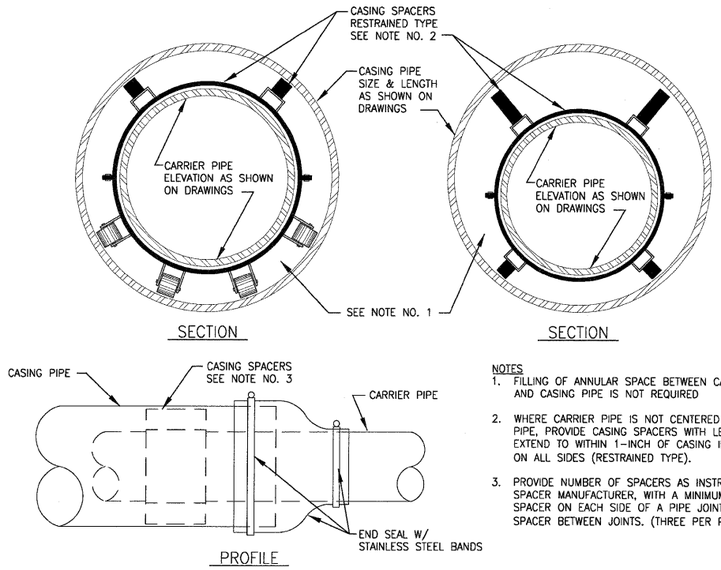

NOTES
1. FILLING OF ANNULAR SPACE BETWEEN CARRIER PIPE AND CASING PIPE IS NOT REQUIRED
2. WHERE CARRIER PIPE IS NOT CENTERED IN CASING PIPE, PROVIDE CASING SPACERS WITH LEGS THAT EXTEND TO WITHIN 1-INCH OF CASING INSIDE WALL ON ALL SIDES (RESTRAINED TYPE).
3. PROVIDE NUMBER OF SPACERS AS INSTRUCTED BY SPACER MANUFACTURER, WITH A MINIMUM OF ONE SPACER ON EACH SIDE OF A PIPE JOINT, AND ONE SPACER BETWEEN JOINTS. (THREE PER PIPE LENGTH)

CASING DETAIL
NO SCALE

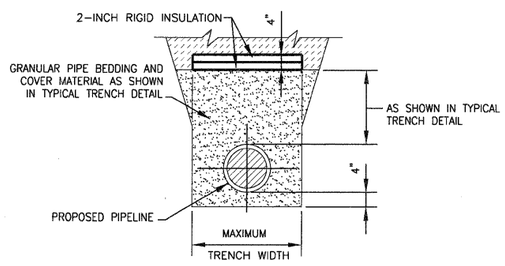

PIPE INSULATION DETAIL
NO SCALE

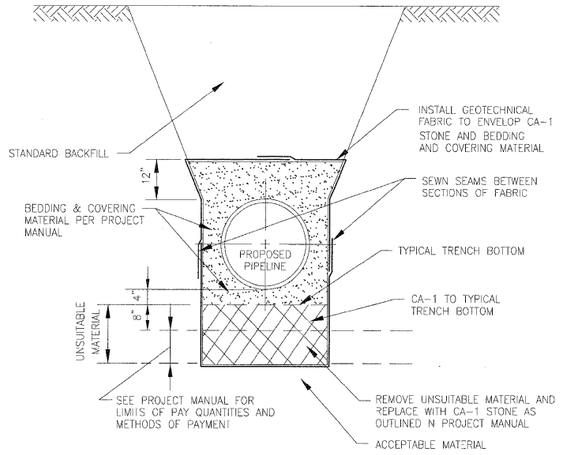

OPEN CUT PIPELINE INSTALLATION
UNSUITABLE MATERIAL
REMOVAL/REPLACEMENT DETAIL
NO SCALE

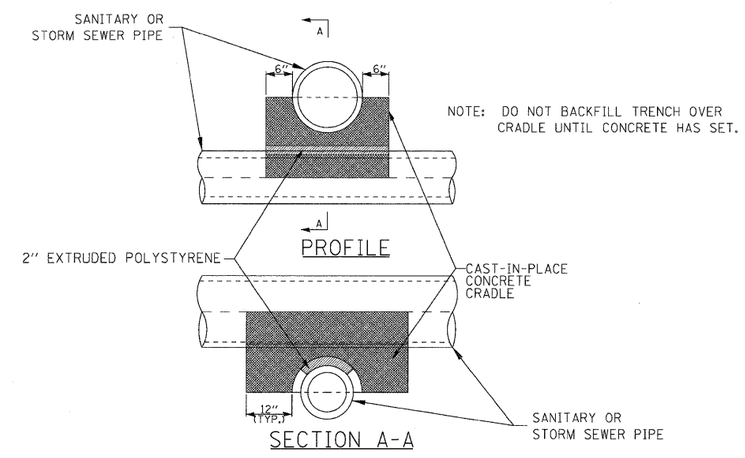

NOTE: DO NOT BACKFILL TRENCH OVER CRADLE UNTIL CONCRETE HAS SET.

CONCRETE CRADLE
FOR SEWER PIPE SUPPORT*
NO SCALE

*TO BE USED WHEN CLEARANCE BETWEEN SEWER PIPES IS 6" OR LESS OR WHEN NOTED ON DRAWINGS

PLAN
NOTE BOOK NO. ____
SURVEYED ____
PLOTTED ____
ALIGNMENT CHECKED ____
RT. OF WAY CHECKED ____
CADD FILE NAME ____
BY ____ DATE ____

PROFILE
NOTE BOOK NO. ____
SURVEYED ____
PLOTTED ____
GRADES CHECKED ____
B.M. NOTED ____
STRUCTURE NOTATNS CHKD ____
BY ____ DATE ____

BAXTER & WOODMAN Consulting Engineers	USER NAME = (username)	DESIGNED - SMV	REVISED -8-27-10 VILLAGE REVIEW
	PLOT CONFIG= PDF22X34.plt	DRAWN - UKB	REVISED -
	PLOT SCALE = 1:1	CHECKED - SMV	REVISED -
	PLOT DATE = 11/24/2010 9:40:57 AM	DATE - 7-30-10	REVISED -

Illinois Department of Transportation

ILLINOIS ROUTE 53
WATER AND SEWER REPLACEMENT DETAILS

SCALE:NONE | SHEET NO. * OF * | STA. | TO STA.

F.A.U RTE.	SECTION	COUNTY	TOTAL SHEETS	SHEET NO.
2578	532B	DUPAGE	781	365
		CONTRACT NO. 60477		
FED. ROAD DIST. NO.	ILLINOIS	FED. AID PROJECT		

I:\Crystal Lake\ITASV\100547-Rt 53 W and S\CADD-SURVEY\DRAWINGS\DGNS\B&W-Details-sht.dgn