SIGN DETAIL
1:10

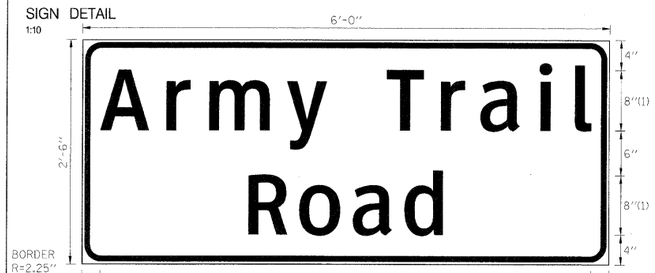

FONT:
(1) ClearviewHwy-3-W

15 Sq. Ft. each

2 Required

Panel Style: Street name Sign.ssi
Dimensions are in inches.tenths

Panel Style: Street name Sign.ssi
M.U.T.C.D.: 2003 Edit'on

Letter locations are panel edge to lower left corner

SIGN NUMBER	Army Trail Rd
WIDTH x HGHT.	6'-0" x 2'-6"
BORDER WIDTH	0.75"
CORNER RADIUS	2.25"
MOUNTING	Overhead
BACKGROUND	TYPE: Reflective
	COLOR: Green
LEGEND/BORDER	TYPE: Reflective
	COLOR: White/White

SYMBOL	ROT	X	Y	WID	HT

LETTER POSITIONS (X)

																						LENGTH	SERIES/SIZE
A	r	m	y		T	r	a	i	l														Clearview-Hwy-3-W
2.5	11.5	17.3	27.9	33.4	41.6	49	54.4	62.4	67.3													67	86.5
R	o	a	d																				Clearview-Hwy-3-W
22.7	29.7	37	44.1																			26.6	86.5

SIGN DETAIL
1:10

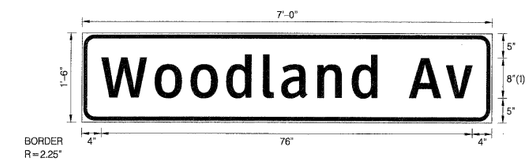

FONT:
(1) ClearviewHwy-3-W

Panel Style: Street name Sign.ssi
M.U.T.C.D.: 2003 Edition

10.5 Sq. Ft. each

2 Required

Panel Style: Street name Sign.ssi
Dimensions are in inches.tenths

Letter locations are panel edge to lower left corner

SIGN NUMBER	Woodland Av
WIDTH x HGHT.	7'-0" x 1'-6"
BORDER WIDTH	0.75"
CORNER RADIUS	2.25"
MOUNTING	Overhead
BACKGROUND	TYPE: Reflective
	COLOR: Green
LEGEND/BORDER	TYPE: Reflective
	COLOR: White/White

SYMBOL	ROT	X	Y	WID	HT

LETTER POSITIONS (X)

																						LENGTH	SERIES/SIZE
W	o	o	d	l	a	n	d		A	v													Clearview-Hwy-3-W
4	15	22.3	29.6	37.2	40.9	48.3	55.4	60.6	67	74.6												76	86.5

SUPPORTING CHANNELS

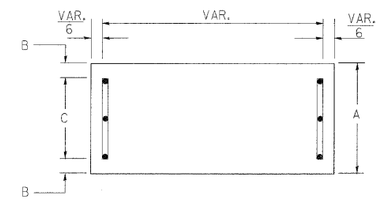

A	B	C
18"	2"	14"

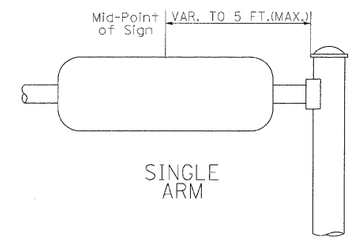

SUPPORTING CHANNELS

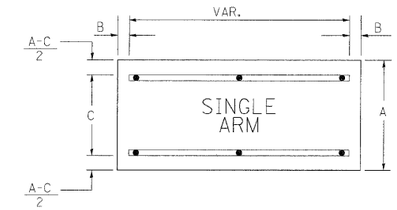

A	B	C
18"	2"	12"
30"	2"	22"

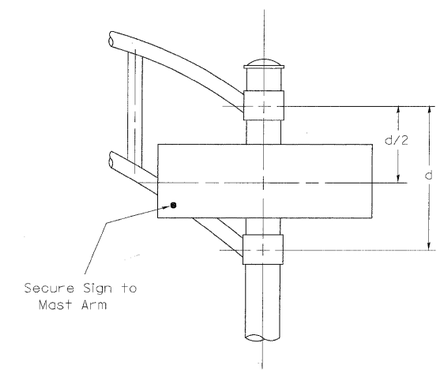

DUAL
ARM

SIGNFIX ALUMINUM CHANNEL FRAMING SYSTEM
Shall be used. See Note #5.

GENERAL NOTES

1. WHERE MAST ARM MOUNTED STREET NAME SIGNS ARE SPECIFIED, THE MAST ARM ASSEMBLY AND POLES SHALL BE DESIGNED TO SUPPORT THE LOADINGS CALLED FOR ON STANDARDS 877001, 877002, 877006, 877011 AND 877012, AS APPLICABLE, PLUS TWO (2) SIGN PANELS 2'-6" x 8'-0" MOUNTED AS SHOWN. THE DESIGN SHALL BE IN ACCORDANCE WITH THE REQUIREMENTS OF THE CURRENT "STANDARD SPECIFICATIONS FOR STRUCTURAL SUPPORTS FOR HIGHWAY SIGNS, LUMINAIRES, AND TRAFFIC SIGNALS" AS PUBLISHED BY THE AMERICAN ASSOCIATION OF STATE HIGHWAY AND TRANSPORTATION OFFICIALS FOR 80 M.P.H. WIND VELOCITY.
2. ALL SIGNS SHALL HAVE A WHITE 3-W CLEARVIEW HIGHWAY FONT WITH 3M-S NEW DG3 REFLECTIVE LEGEND AND BORDER ON A GREEN 3M-S NEW DG3 REFLECTIVE BACKGROUND SHEETING.
3. THE SIGN LENGTH SHOULD BE INCREASED IN 6-INCH INCREMENTS, BUT THE OVERALL LENGTH SHOULD NOT EXCEED 8'-0".
4. ALL BORDERS SHALL BE ¾" WIDE AND CORNER RADIUS SHALL BE 2-1/4 ".
5. SIGNFIX ALUMINUM CHANNEL FRAMING SYSTEM SHALL BE USED FOR ALL SIGNS ATTACHED TO SIGNAL POLES AND POSTS. LOCAL SUPPLIERS OF THE SIGNFIX ALUMINUM CHANNEL FRAMING SYSTEM ARE:
   - * A.K.T. CORPORATION, SCHAUMBURG, IL
   - * TUCKER COMPANY, INC., WAUWATOSA, WI
   - * AMERICAN FABRICATION CO., CHICAGO HEIGHTS, IL
   - * WESTERN TRAFFIC CONTROL INC., CICERO, IL

   PARTS LISTING:

SIGN CHANNEL	PART #HPN053 (MED. CHANNEL)
SIGN SCREWS	¼" x 14 x 1" H.W.H. #3 SELF TAPPING WITH NEOPRENE WASHER
BRACKETS	PART #HPN034 (UNIVERSAL) CHANNEL CLAMPS WITH STAINLESS STEEL STRAPPING

   OTHER BRANDS OF MOUNTING HARDWARE ARE ACCEPTABLE, BASED UPON THE DEPARTMENT'S APPROVAL AND COMPATIBILITY WITH THE CHANNEL/BRACKET OF THE ABOVE PRODUCT.