STATE OF ILLINOIS
DEPARTMENT OF TRANSPORTATION

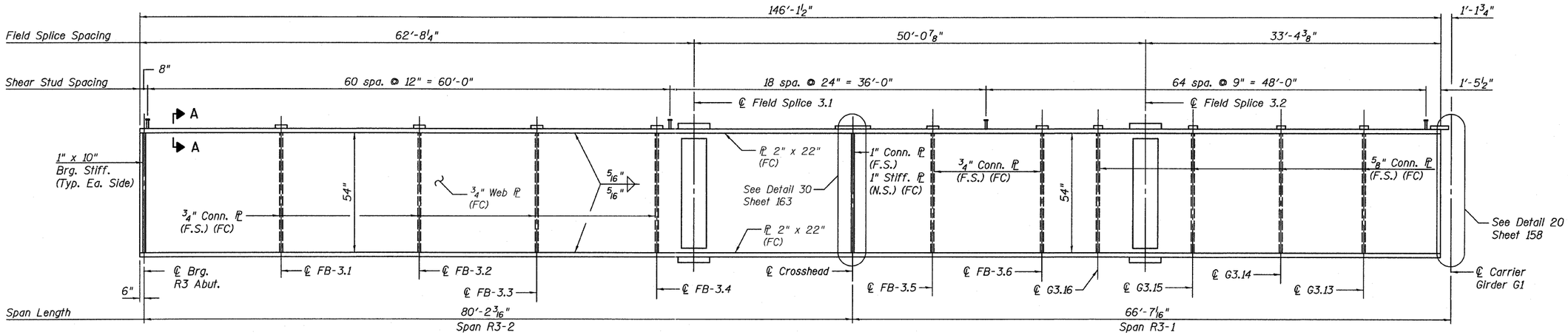

GIRDER ELEVATION - G3.12
(Looking South)
(F.C.M.)

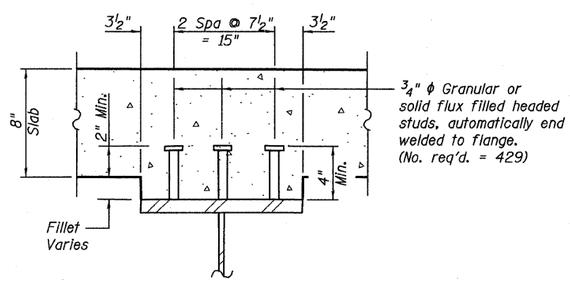

SECTION A-A

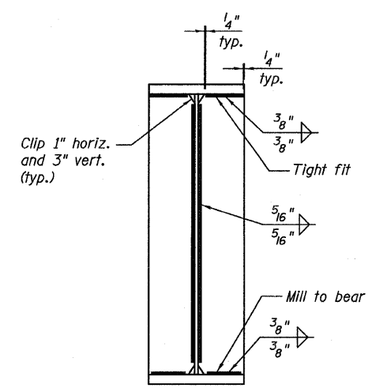

BEARING STIFFENER

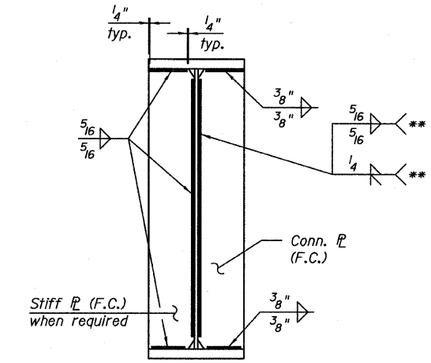

** Weld type based on angle between web and connection plate where angles warrant combination of fillet and groove welds. Fillet weld is acute angle and groove weld is obtuse angle.

TYPICAL CONNECTION
PLATE DETAIL

NOTES:

1. All steel shown on this sheet shall conform to the requirements of AASHTO M270 GR 50.
2. F.C. denotes Fracture Critical Material, AASHTO Zone II.
3. For Field Splice details, See Sheet 167.
4. F.S. denotes far side.
5. N.S. denotes near side.

GIRDER ELEVATIONS 3
RAMP 3 FLARE
STRUCTURE NO. 016-0724

TYLIN INTERNATIONAL	DESIGNED - JPN	REVISIONS	
	CHECKED - AMD,	NAME	DATE
	DRAWN - MAU		
	CHECKED - AMD,		
	DATE - 03/25/2011		

SHEET NO. 154
239 SHEETS

F.A.I RTE.	SECTION	COUNTY	TOTAL SHEETS	SHEET NO.
55	0711.2R & 1011.1BR	COOK	741	478
		CONTRACT NO. 60999		
FED. ROAD DIST. NO. 1	ILLINOIS	FED. AID PROJECT		

P:\01345\Structur\C2 Central Ave. 016-0724\55F3Framed15.dgn 4/29/2011 2:28:06 PM