SECTION 10, TOWNSHIP 36, RANGE 13

N

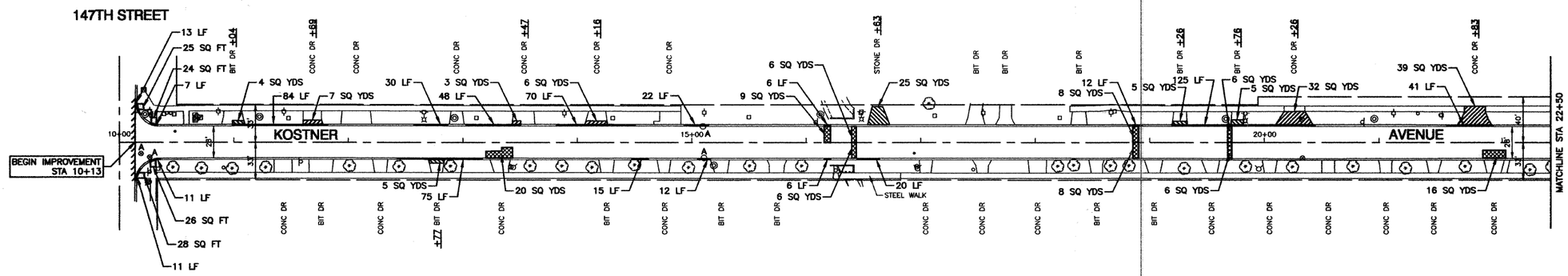

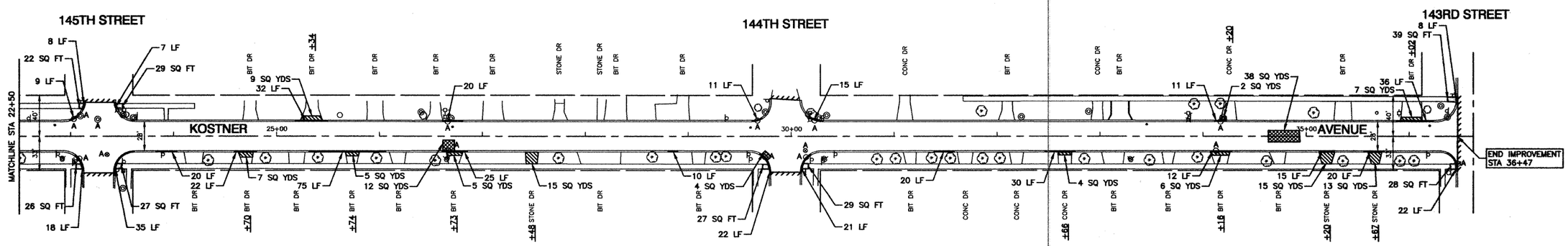

LEGEND

- HMA PAVEMENT REPAIR
- HMA DRIVEWAY REMOVAL AND REPLACEMENT
- CONCRETE DRIVEWAY REMOVAL AND REPLACEMENT
- CONCRETE SIDEWALK REMOVAL AND REPLACEMENT
- BUTT JOINTS
- CURB REMOVAL
- A — CATCH BASIN TO BE ADJUSTED, FRAME & LID TO BE ADJUSTED SPECIAL, VALVE BOX TO BE ADJUSTED.

NOTE:

1. DETECTABLE WARNINGS ARE TO BE INSTALLED AT LOCATIONS OF SIDEWALK REMOVAL AND REPLACEMENT. CONTRACTOR TO POSITION AND PLACE DETECTABLE WARNINGS AT THE DIRECTION OF THE ENGINEER.
2. LIMIT OF CONSTRUCTION ON ALL SIDE STREETS IS THE RADIUS RETURN PLUS 10' BUTT JOINT OR R.O.W. AS NOTED.
3. ACCESS TO ALL DRIVEWAYS SHALL BE MAINTAINED UPON COMPLETION OF EACH WORKDAY. RESIDENTS SHALL BE NOTIFIED 24 HOURS IN ADVANCE OF WHEN DRIVEWAY REPLACEMENT WILL TAKE PLACE.

FILE NAME = 10510-PLAN-01 - IDOT PD1	USER NAME =	DESIGNED — JPH	REVISED —	STATE OF ILLINOIS DEPARTMENT OF TRANSPORTATION	KOSTNER AVENUE RESURFACING 147TH STREET TO 143RD STREET PAVEMENT PLAN	F.A.U. RTE.	SECTION	COUNTY	TOTAL SHEETS	SHEET NO.
		CHECKED — PKB	REVISED —			2404	11-00026-00-RS	COOK	10	4
	PLOT SCALE =	DRAWN — SR / PS	REVISED —					CONTRACT NO. 63574		
	PLOT DATE = 03-18-11	CHECKED — AG	REVISED —		SCALE: 1"=50' / SHEET NO. 4 OF 10 SHEETS / STA. 10+13 TO STA. 36+47	FED. ROAD DIST. NO. 1	ILLINOIS	FED. AID PROJECT M-9003(775)		