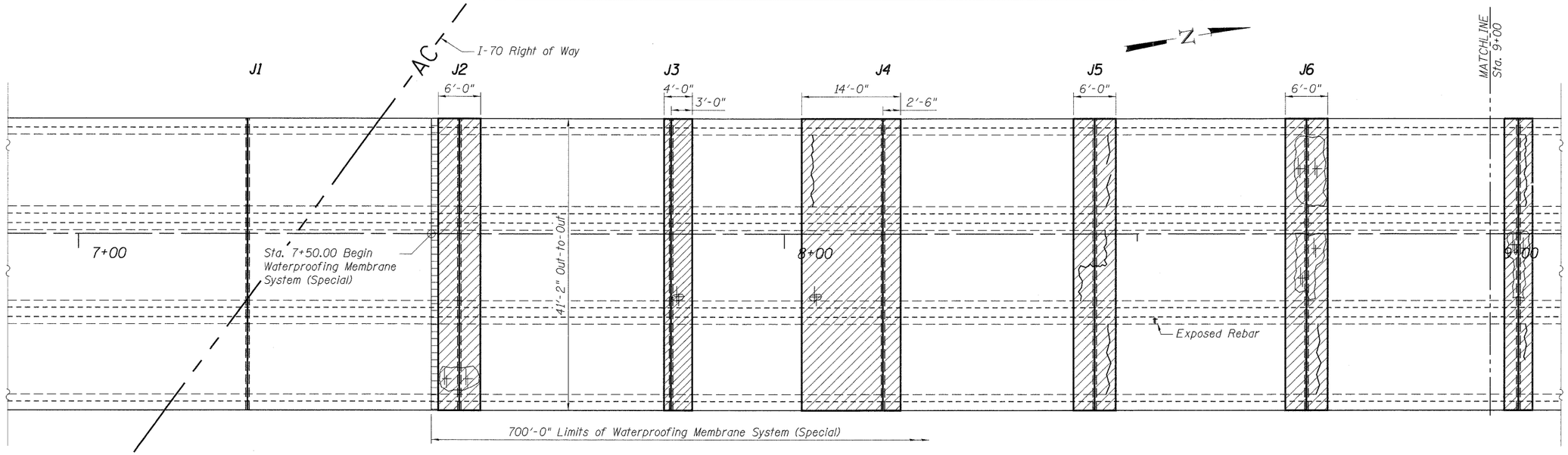

TOP SLAB PLAN

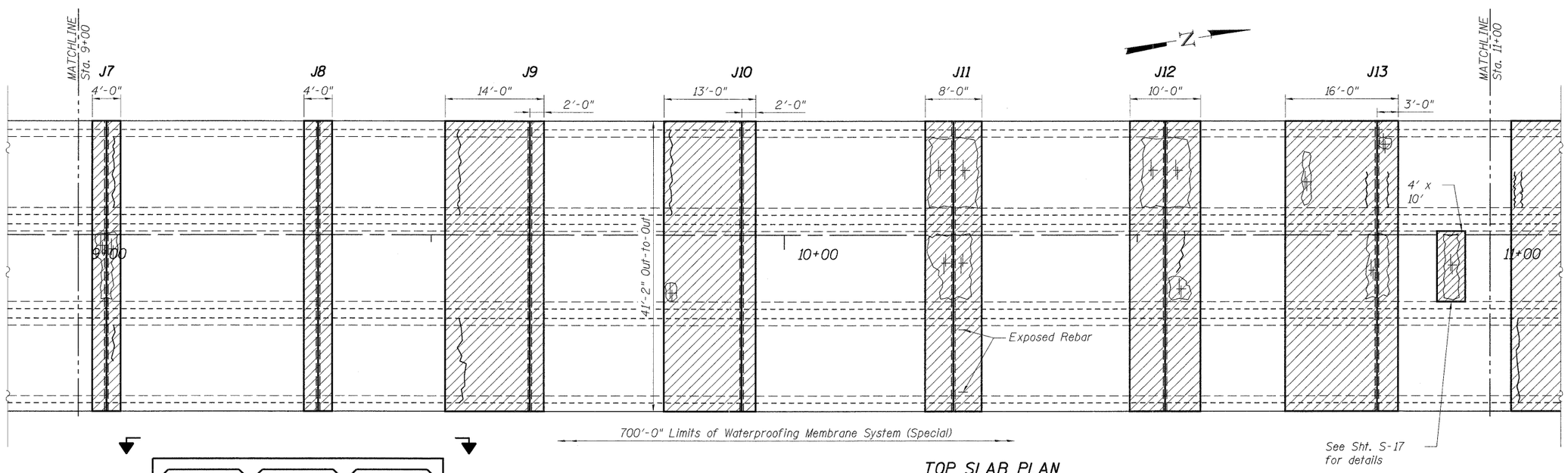

TOP SLAB PLAN

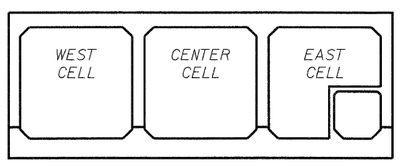

BOX CULVERT CROSS SECTION

(LOOKING NORTH)

NOTE

All cracks, spalls, and exposed rebar indicated are on the underside of slab.

FILE NAME = $FILEL$	USER NAME = $USER$	DESIGNED - MDJ	REVISED -
		DRAWN - MDJ	REVISED -
TENG & ASSOCIATES, INC. ENGINEERS/ARCHITECTS/PLANNERS CHICAGO, ILLINOIS	PLOT SCALE = $SCALE$	CHECKED - JLR	REVISED -
	PLOT DATE = $DATE$	DATE - 02/04/11	REVISED -

STATE OF ILLINOIS
DEPARTMENT OF TRANSPORTATION
I-70 CONNECTION
CAHOKIA CANAL BOX CULVERT REPAIR PLANS

TOP SLAB REPAIR PLAN
SHEET 1 OF 2

SCALE: | SHEET NO. S-4 OF S-18 | STA. 150+80.33 TO STA.

F.A. RTE.	SECTION	COUNTY	TOTAL SHEETS	SHEET NO.
998	82-1A	ST. CLAIR	190	147
SN 082-2010		CONTRACT NO. 76C41		
FED. ROAD DIST. NO.	ILLINOIS	FED. AID PROJECT		

..\082201B-CONN-06-001-ES.DGN,..\082201B-CONN-06-001-ES.DGN,..\082201B-CONN-06-001-ES.DGN,..\082201B-CONN-99-001-BO.DGN,..\DBCONN-99-ROW2.DGN
3-22-2011, 15:37:41 RITCHJL \\FS-0044\AM\VAULT\D-TRANS_07\2202\208E8-001\STRUCT\CAD\01 DESIGN\082201B\SHEET\082201B CONN 06-001-SHT-BE.DGN