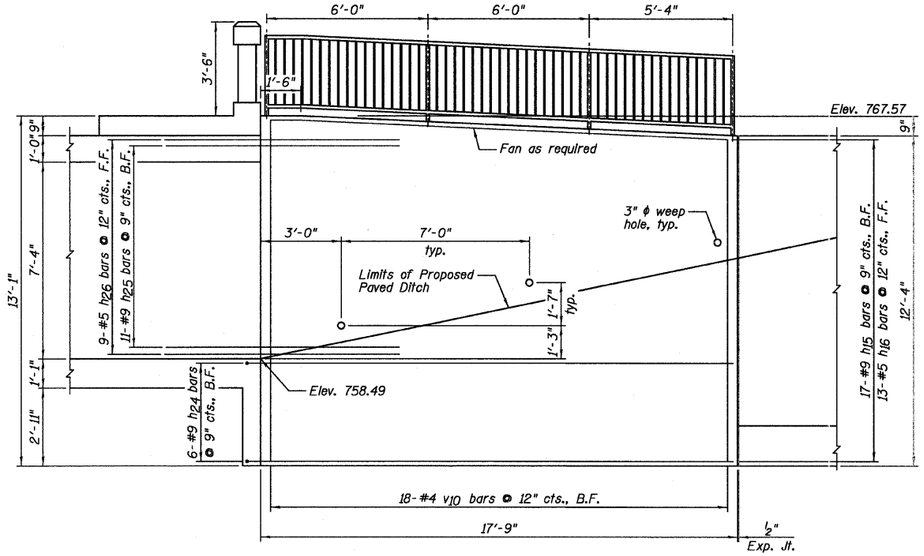

SOUTHWEST WINGWALL ELEVATION

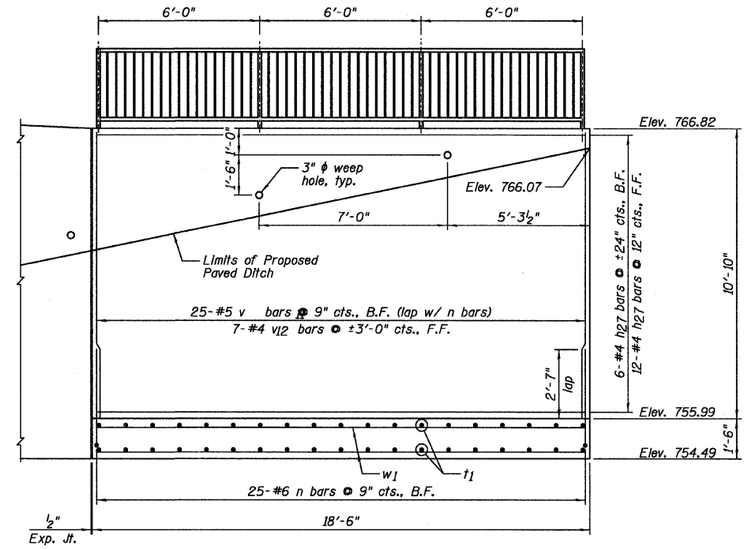

SOUTHWEST RETAINING WALL ELEVATION

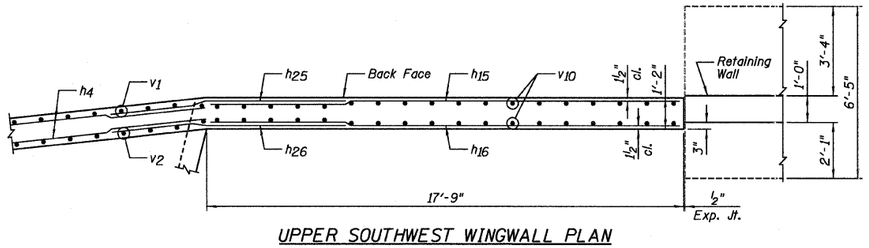

UPPER SOUTHWEST WINGWALL PLAN

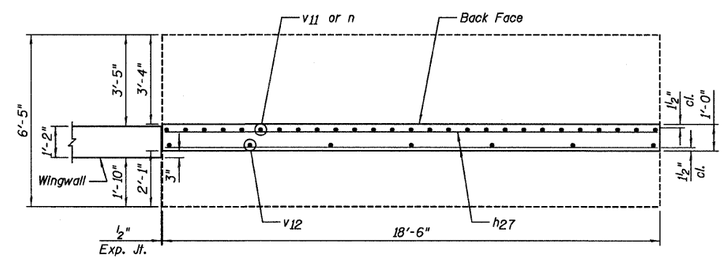

UPPER SOUTHWEST RETAINING WALL PLAN

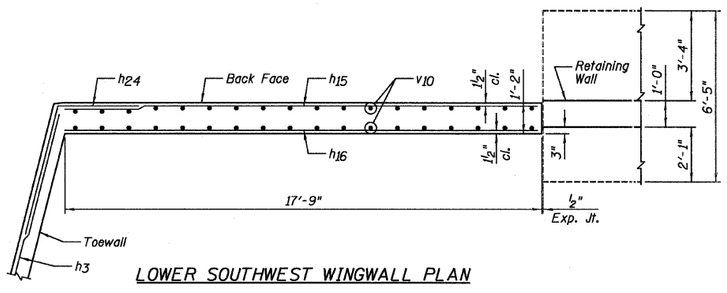

LOWER SOUTHWEST WINGWALL PLAN

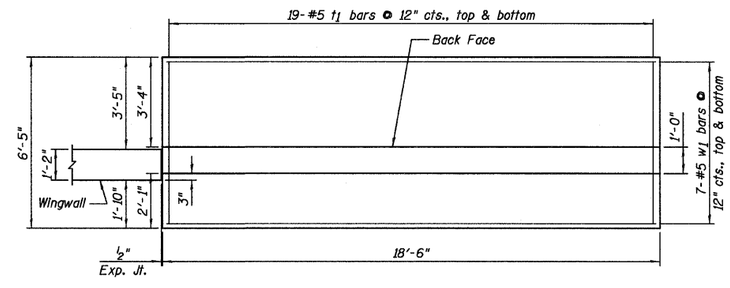

LOWER SOUTHWEST RETAINING WALL PLAN

SOUTHWEST WINGWALL AND RETAINING WALL STRUCTURE NO. 057-7841

DESIGNED	JCZ
CHECKED	MSW
DRAWN	JWK
CHECKED	MSW
DATE	02/25/11

NOTES:

1.) E.F. denotes Each Face, F.F. denotes Front Face and B.F. denotes Back Face.
2.) Order v10 bars full length, cut according to Bar Cutting Diagram on Sheet C16. Use remainder of bars in front face.
3.) See Sheet C16 for Bar Bending Diagrams, Bill of Material and Joint Detail.
4.) For bar lap lengths, see the General Notes on Sheet C2.
5.) For Southwest Retaining Wall, calculated maximum soil pressure = 2,010 psf.

SHEET NO. C15	F.A.P. RTE.	SECTION	COUNTY	TOTAL SHEETS	SHEET NO.
19 SHEETS		07-00233-00-BR	MCLEAN	40	30
		SN 057-7841	CONTRACT NO. 91422		
		FED. ROAD DIST. NO. 5	ILLINOIS	FED. AID PROJECT	

FARNSWORTH GROUP, INC. CONSULTING ENGINEERS - 2709 MCGRAW DRIVE BLOOMINGTON, ILLINOIS 61704 (309) 663-8435 / (309) 663-1571 FAX

24-8175