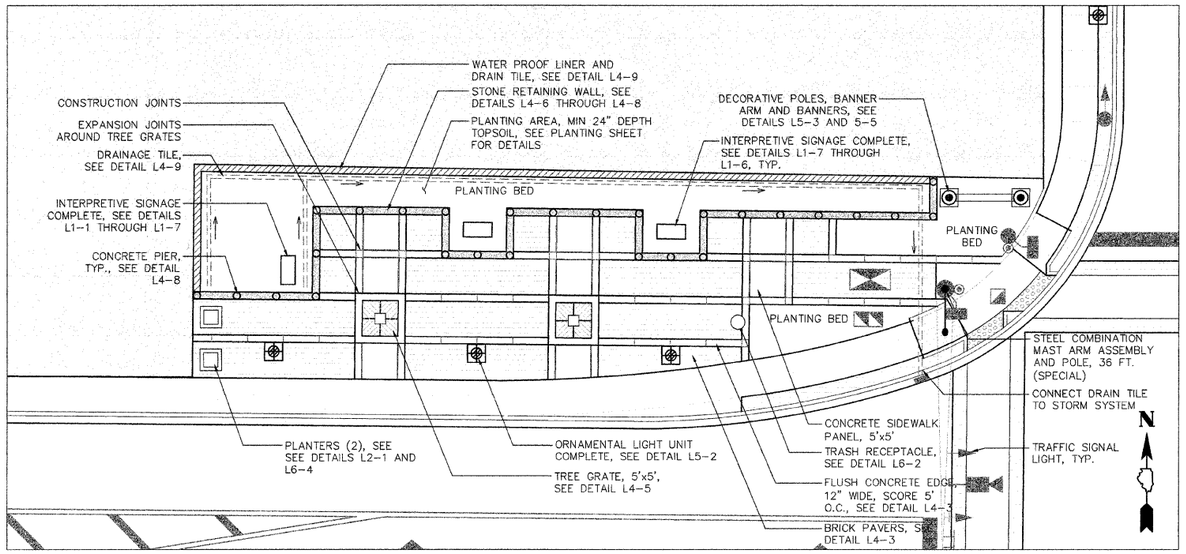

A NORTHWEST PLAZA

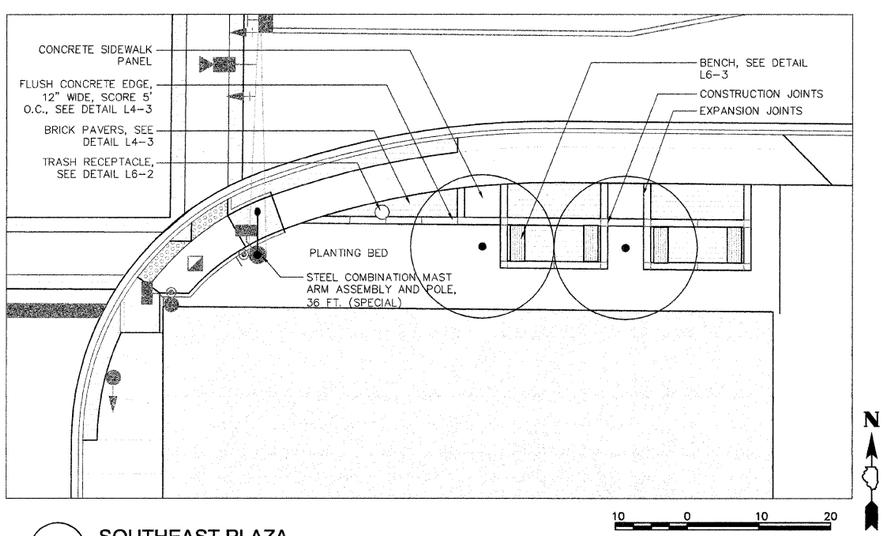

B SOUTHEAST PLAZA

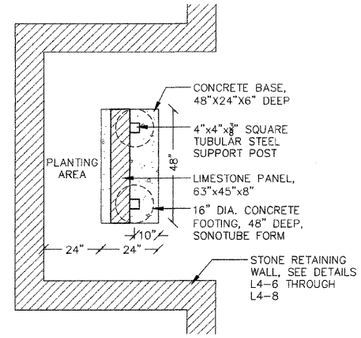

L 1-1 INTERPRETIVE SIGNAGE PLAN NOT TO SCALE

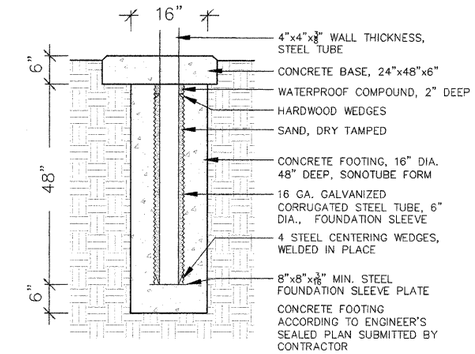

L 1-2 INTERPRETIVE SIGNAGE FOOTING NOT TO SCALE

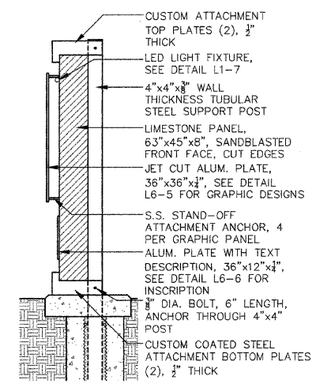

L 1-3 INTERPRETIVE SIGNAGE SECTION NOT TO SCALE

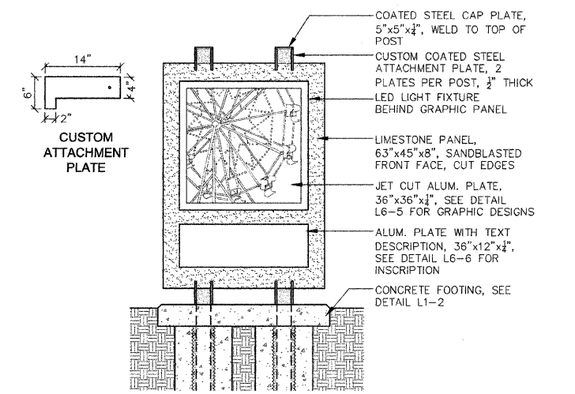

L 1-4 INTERPRETIVE SIGNAGE ELEVATION NOT TO SCALE

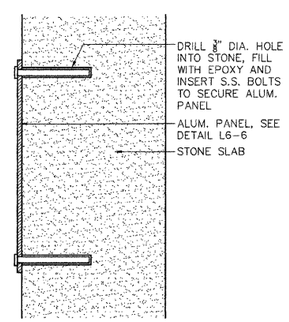

L 1-5 ALUMINUM PANEL WITH TEXT INSCRIPTION NOT TO SCALE

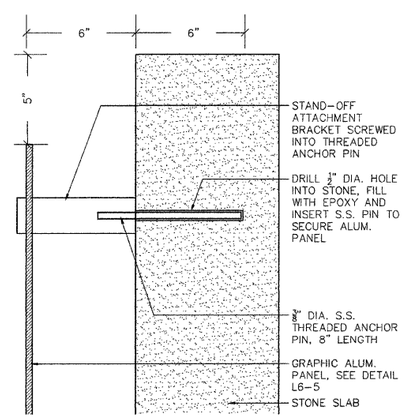

L 1-6 ALUMINUM PANEL LASER CUT GRAPHIC NOT TO SCALE

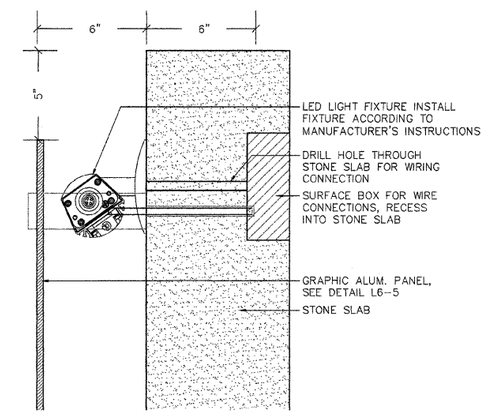

L 1-7 LED LIGHT FIXTURE NOT TO SCALE

Massie & Massie Associates
1210 S. 5th Street, Springfield, IL 62703 217-544-3210
421 West Main Street, Decatur, IL 62522 217-424-0792

FILE NAME = $FILEL$	USER NAME =	DESIGNED — SM	REVISED —
		DRAWN — NFB	REVISED —
	PLOT SCALE = 1" = 10'	CHECKED — SM	REVISED —
	PLOT DATE = 2-8-2011	DATE — 2-8-2011	REVISED —

STATE OF ILLINOIS
DEPARTMENT OF TRANSPORTATION

CITY OF JACKSONVILLE DOWNTOWN MAIN STREET IMPROVEMENTS
PLAZA PLANS

SCALE: 1"=10' | SHEET NO. – OF – SHEETS | STA. _____ TO STA. _____

F.A. RTE.	SECTION	COUNTY	TOTAL SHEETS	SHEET NO.
N/A	10-00121-01-PV	MORGAN	77	46

CONTRACT NO. 93547

FED. ROAD DIST. NO. _ | ILLINOIS | FED. AID PROJECT