MATERIALS SPECIFICATIONS FOR WATER DISTRIBUTION

1. Pipe Material for Water Mains

Water mains shall be constructed of ductile iron pipe, Class 52 (AWWA-C151) with cement mortar lining and seal coating (AWWA-C104).

The joints shall be rubber gasket push-on or mechanical (AWWA-C111). Water main fittings shall be of ductile iron with cement mortar lining and seal coating with mechanical joints and shall conform to (AWWA-C110).

All pipe and fittings shall be manufactured in the United States unless prior approval is received from Illinois American.

2. Fire Hydrants

Fire hydrants shall be either American Flow Control "Waterous Pacer", model WB-67-250 or East Jordan Iron Works, Inc. "Watermaster" model 5BR. Each hydrant shall have a traffic flange, be compression type, open with pressure in a counterclockwise direction with rising stem, and meet or exceed AWWA specification C-502.

Threads for fire hydrants in all properties shall be National Standard, with the exception of the Moreland property where City of Chicago Standard is used. Hydrant is to have one 4 1/2" pumper port and two 2 1/2" hose ports.

Hydrant length shall be supplied to provide a minimum of 5.5 feet of cover over the top of the water main.

All fire hydrants are to be supplied painted on the exterior with two coats of Inemec brand "Inemec-Gloss" Federal Safety Yellow Enamel #2016 (OSHA 1910.44-ANSI 53.1).

Mechanical Joint (MJ) Anchoring Tee's shall be used for the auxiliary connection to the water main. The auxiliary valve shall be mechanical joint, resilient wedge type as manufactured by U.S. Pipe, Clow, Waterous and American Flow Control.

Connection of the auxiliary valve to the fire hydrant shall be completed utilizing a 6" dia. "Clow" MJ Anchoring coupling for laying distances 12" to 18". For greater distances, use Class 52 ductile iron pipe with "MEGALUG" (As manufactured by EBBA Irons Sales, Inc.) retainer glands.

Cover for fire hydrant auxiliary valve shall be painted with Inemec brand "Inemec-Gloss" Federal Safety Blue Enamel #2045 (OSHA 1910.144 - ANSI 53.1).

3. Valves - 12" and Smaller

Valves 12" and smaller shall be push-on or mechanical joint fitted resilient wedge type and shall conform to AWWA C-509-80. Valves shall open counterclockwise having non-rising stem.

Valves shall be resilient wedge type as manufactured by U.S. Pipe, Clow, Waterous and American Flow Control.

4. Valves - Larger than 12"

Valve shall be manufactured by Dresser "450", Clow, Mueller or approved equal.

Valves larger than 12" shall be of the butterfly type with rubber seat and stainless ring on the disc edge to mate with the rubber seat, shall open counterclockwise, shall meet or exceed AWWA C-504 or AWWA C-505.

5. Valve Box

The entire valve box assembly shall be Tyler 664S, Clow F-2454 with F-2490 cover, or Mueller H-10360.

6. Vaults

Vaults required for pressure taps, check valves and meter installations, shall be of precast concrete unit construction (ASTM-C478) with a concentric cone and joints sealed with butyl-based material. Concrete adjustment rings shall be used if adjustment is necessary. Adjustment sections shall not exceed 12" vertically overall. All joints shall be sealed with Rubber-Nec, or approved equal butyl-based material. Cement grouting of the seams and joints shall not be completed. Butyl material shall total a minimum width of 2" as applied in two pieces.

A flexible union between the pipe and manhole wall, meeting ASTM C-923, cast integrally into the manhole wall, shall be provided for each pipe connection to the manhole. Unions shall be Interpace Lock Joint Flexible Manhole Sleeve, A-Lok Manhole Pipe Connector, Link Seal, or approved equal. Such unions shall be selected and installed in accordance with the manufacturer's specifications for the specific type of pipe used. Manhole casting shall be Neenah R-1772-B or approved equal. Lid shall be Neenah foundry Type B "Self Sealing" with the word "WATER" imprinted. Manhole steps shall be M-A Industries plastic coated. Manholes are to be water-tight.

7. Pressure Taps

Pressure taps shall be performed in the presence of an Illinois-American representative. The outside diameter of the cutter must be at least 1/4" less than the nominal size of the tap to be made. Illinois-American must be provided with a minimum of 48 hours advance notice (630/739-8839) so that inspection by an Illinois-American representative can be scheduled.

8. Sizing of Taps

Size-on-size taps will not be allowed. The tap shall be no larger than one pipe size smaller than the main being tapped. For example, the pressure tap size allowed on an 8 inch main shall be 6 inches.

A. Taps 2" and Larger on:

1. Cast Iron Pipe

a. Clow Model F-5205 tapping sleeve, or approved equal, for sizes 4 inch through 16 inch. All bolts shall be stainless steel (Type 304), or high strength, corrosion resistant, low alloy material such as Armco CorTen.

2. Asbestos Cement Pipe

a. Clow Model F-5207 tapping sleeve, or approved equal for sizes 4 inch through 12 inch.

b. In specifying tapping sleeves to fit on the "rough barrel" or, that is, the full outside diameter portion of the pipe, it is important that the outside diameter of the pipe be measured before ordering the tapping sleeve. Outside diameters of asbestos pipe can vary significantly and may not remain consistent even within the same pressure class of pipe.

c. All bolts shall be stainless steel (Type 304), or high strength, corrosion resistant low alloy material such as Armco Cor Ten.

3. Ductile Iron Pipe

a. Romac Industries, Inc., Style "SST", stainless steel tapping sleeve may use the sleeve indicated above for cast iron, or approve equal. Tapping valves shall be the resilient wedge type as manufactured by U.S. Pipe, Clow, Waterous, or American Flow Control.

B. Taps 2" or Less

Taps two inch and less may be made by direct tap connection on cast or ductile iron mains. A two inch direct tap on a 6" cast or ductile iron main is not allowed and requires a saddle. All asbestos cement and PVC main taps require saddles. Saddles must be off all bronze or all stainless steel construction.

Bronze: Mueller H 16105, Rockwell 323 or James Jones Co. J-979

Stainless Steel: Cascade CS22, or Romac Style 305

9. Small Service Line Appurtenances

A. Curb Box

Curb box shall be Minneapolis Pattern, 1-1/2 inch inside diameter upper section with a 6 foot fully extended length tapped 2 inch at the bottom and supplied with a bushing for smaller curb stops. The lid shall be a two-piece plug type, with a brass sleeve in the cap threaded to receive the brass plug.

Acceptable units are:

Mueller H-10302-72" with lid and plug #89980 with an H-10343 bushing

A.Y. McDonald box Model 5623 with lid Model 5623-L including plug #4511-204.

B. Curb Stop

For 1" service lines the curb stop shall be:

Mueller Mark II Oriseal H-15155 or A.Y. McDonald 6104-22.

For 1-1/2" and 2" services the curb stop shall be:

Ford No. B44-666M for 1-1/2" and No. B44-777M for 2", or A.Y. McDonald 6104-22.

C. Corporation Stop

Corporation stops for 1" through 2" shall be

Mueller 110 #15008
A.Y. McDonald #4701-B-22.

NOTE: The curb stop and corporation stop shall be equipped with conductive compression connections. Flared or sweat connections are not allowed.

10. Service Lines

All water service lines shall be Type K copper. One piece shall be used from the main to the curb stop and one piece from the curb stop to the meter spread, for lengths of 100 feet or less. The minimum size shall be 1" for a single-family residence. Lines for larger services shall be in accord with AWWA Manual of Practice #22.

When the distance from the curb stop to the meter in the building exceeds the length of copper available, a connection may be made using a Mueller, Ford, or A. Y. Mcdonald three-part union with conductive, compression connections.

INSTALLATION SPECIFICATIONS

1. Protection of Water Mains from Sanitary Sewers and Storm Sewers

Water mains shall be protected for horizontal and vertical separation in accordance with the Technical Policy Statements or the requirements of MWRDGC, whichever applies. Further, no water main shall pass through or come into contact with any part of a sewer or sewer manhole.

2. Depth of Pipe Cover

A minimum depth of five feet six inches shall be maintained for all water main. The five feet six inches depth shall be from proposed final grade elevation to the crown of the main. Maximum depth of cover shall be seven feet.

MINIMUM BEARING AREA IN SQUARE FEET[*

	BENDS (degrees)					
PIPE SIZE	11-1/4	22-1/2	45	90	TEE	DEAD END
6"	1.0	2.5	4.5	8.0	5.5	5.5
8"	2.0	4.0	7.5	14.0	10.0	10.0
10"	3.0	6.0	11.0	20.5	14.5	14.5
12"	4.0	8.0	16.0	29.0	20.5	20.5

* Bearing areas are based on soil having an allowable safe lateral bearing of one ton per square foot. Areas must be revised for soils with a lower bearing capacity.

3. Corrosion Protection

All pipe, fittings, fire hydrant leads, sleeves and valves are to be encased in polyethylene in accordance with AWWA C-105, unless a soil survey has been performed and non-corrosive soils are shown to exist.

4. Laying of Pipe on Curves

Long radius curves, either horizontal or vertical, may be laid with standard pipe by deflections at the joints. If the pipe is shown curved on the plans and no special fittings are shown, it may be assumed that the curves can be made by deflection of the joints with standard lengths of pipe. In approved situations, shorter lengths of pipe may be used to avoid the use of fittings.

Maximum deflections at pipe joints and laying radius for various pipe lengths shall be in accordance with the manufacturer's recommendations based on the size of pipe and type of joint. When rubber gasketed pipe is laid on a curve, the pipe shall be jointed in a straight alignment, then deflected. Trenches shall be made wider on curves for this purpose.

5. Thrust Restraint

All fittings, bends and hydrants shall be properly braced by means of restrained joint assemblies as shown in the standard detail or using methods as described below:

A. Mechanical joint fittings, bends and hydrants shall be properly anchored by means of "Megalug" (as manufactured by EBBA Iron Sales, Inc.) retainer glands. All set screws shall be installed and tightened in accord with manufacturer's recommendations.

B. All push-on joint fittings and bends shall be properly anchored by means of a U.S. Pipe Field Lok gasket or approved equal.

C. All push-on or mechanical joint fittings, bends, and hydrants shall be properly anchored by means of a concrete thrust block as outlined in the Standard Details. The minimum bearing area specifications to be utilized are outlined as follows:

Reaction blocking shall be designed for a minimum internal pipe pressure of 300 psi. The blocking shall be kept clear of the entire bell configuration of any adjacent joint and shall be at least as large as is necessary to restrain the fittings from movement. All concrete shall have a minimum compressive strength of 3000 psi at the end of 28 days.

D. Fire hydrant shall be positively anchored directly to the tee on the main using mechanical joint anchoring fittings, or other approved restraining system.

E. Valves at tees and crosses, where required, shall be anchored directly to the fitting using Clow (or equal) mechanical joint anchoring fittings, or other approved restraining system.

6. Bedding

Type I backfill in accordance with ANSI/AWWA C600-87 as illustrated in the Standard Detail shall be used unless the main is being laid under pavement or within right-of-way.

If soil conditions are encountered which require removal of unsuitable material below the depth of the standard bedding, the material removed shall be replaced with granular material of the gradation approved by Illinois-American.

Testing and Disinfection

7. Pressure Test

All newly laid water main shall be subjected to hydrostatic pressure test equal to 200 psi for a period of at least two hours. The pressure shall be maintained at 200 psi for the duration of the test. Each section of the main to be tested, as determined by Illinois-American, shall be slowly filled with water to the specified test pressure utilizing a test pump connected to the main in a satisfactory manner. The test pump, pipe connection and all necessary apparatus, including gauges and the meters, shall be furnished by the developer.

Before applying the specified test pressure, all air shall be expelled from the main utilizing fire hydrants or pressure taps, if necessary, installed at points of highest elevation along the water main installation.

Connection to Illinois-American's water system will not be permitted unless the installation has been constructed in accordance with approved plans and specifications and has been satisfactorily pressure tested in the presence of an Illinois-American designated representative. During the test, the entire length of main being tested, along with all appurtenances, will be carefully inspected by an Illinois-American representative.

Any cracked or defective pipes, fittings, valves or hydrants discovered as a result of this pressure test shall be removed and replaced by the Developer at his expense with sound, new material and retested until satisfactory to an Illinois-American representative. When pressure testing against an existing water main valve and should the valve be found to be leaking or fail during the pressure test, the Developer shall provide and install a new valve at the location of the defective valve.

8. Leakage Test

In conjunction with the pressure test, a leakage test shall be conducted to determine the quantity of water lost by leakage under the specified test pressure. The allowable leakage in gallons per hour per pipeline shall not be greater than that determined by the formula:

$$L = \frac{ND\sqrt{P}}{7400}$$

L = The allowable leakage in gallons per hour

N = Number of joints for length of pipeline tested

D = The nominal diameter of the pipe in inches

P = Average test pressure during the leakage test in pounds per square inch gauge

The test will be conducted at an average pressure of not less than 200 psi at the high point of the main and for a period of not less than two hours.

9. Disinfection of Water

The section of main to be disinfected shall first be flushed to remove any solids or contaminated material that may have become lodged in the main. All flushing is to be done under continuous supervision of an Illinois-American representative.

No valves or fire hydrants or other appurtenances are to be purged or flushed unless an Illinois-American representative is present. Illinois-American must be provided with a minimum of 48 hours advance notice (630/739-8839) so that inspection by an Illinois-American representative can be scheduled.

All chlorination, flushing, and testing is to be done in strict accord with "Illinois Standards", Division IV, Section 41-2.14. All new mains shall be chlorinated so that the initial chlorine residual of not less than 25 mg/l and that a chlorine residual of not less than 10 mg/l remains in the water after standing 24 hours in the pipe. Watermain disinfection is per AWWA standard C651. All chlorine concentrations listed are free chlorine. Water test samples are to be collected on two consecutive days after chlorination and final flushing. The first sample is to be collected 24 hours after the final flushing. Chlorine shall be applied in liquid or gas form.

OPERATION OF WATER SYSTEM

The operation of main valves and fire hydrants on the water system in service often results in disturbance of the natural sediments and mineral deposits in mains, causing problems for Illinois-American's customers. Illinois-American has a responsibility to provide its customers the highest level of service possible. Therefore, Illinois-American has adopted a strict policy that no one, other than an employee of Illinois-American, unless expressly authorized, is to operate any valve, fire hydrant, or other appurtenance of water system that is in service or which will affect the system that is in service. This operation is to be performed by an employee of Illinois-American or under his direct supervision.

Illinois-American must be provided with a minimum of 48 hours advance notice (630/739-8839) so that the filling/flushing operations can be scheduled.

When there is no alternative to using water from a fire hydrant, fire hydrant meters are available by contacting Illinois-American's office during normal working hours by calling 800/422-2782.

ILLINOIS-AMERICAN WATER COMPANY STANDARD

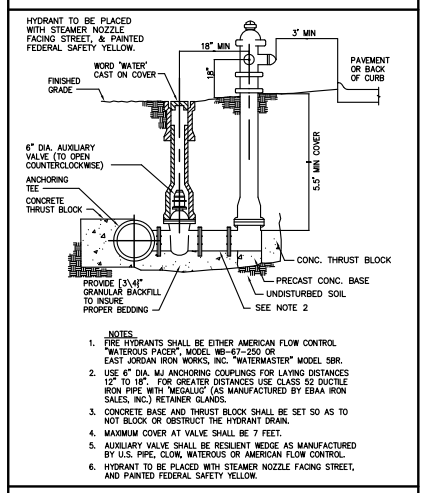

NOTES:
1. FIRE HYDRANTS SHALL BE EITHER AMERICAN FLOW CONTROL "WATEROUS PACER", MODEL WB-67-250 OR EAST JORDAN IRON WORKS, INC. "WATERMASTER" MODEL 5BR.
2. USE 6" DIA. MJ ANCHORING COUPLINGS FOR LAYING DISTANCES 12" TO 18". FOR GREATER DISTANCES USE CLASS 52 DUCTILE IRON PIPE WITH "MEGALUG" (AS MANUFACTURED BY EBAA IRON SALES, INC.) RETAINER GLANDS.
3. CONCRETE BASE AND THRUST BLOCK SHALL BE SET SO AS TO NOT BLOCK OR OBSTRUCT THE HYDRANT DRAIN.
4. MAXIMUM COVER AT VALVE SHALL BE 7 FEET.
5. AUXILIARY VALVE SHALL BE RESILIENT WEDGE AS MANUFACTURED BY U.S. PIPE, CLOW, WATEROUS OR AMERICAN FLOW CONTROL.
6. HYDRANT TO BE PLACED WITH STEAMER NOZZLE FACING STREET, AND PAINTED FEDERAL SAFETY YELLOW.

FIRE HYDRANT

ILLINOIS-AMERICAN WATER COMPANY STANDARD

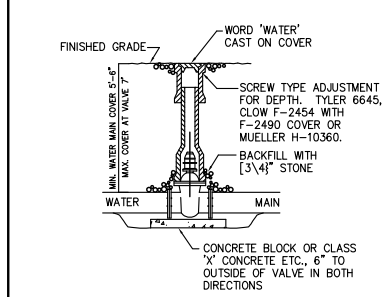

NOTES:
1. RESILIENT WEDGE GATE VALVE-U.S. PIPE, CLOW WATEROUS OR AMERICAN FLOW CONTROL.
2. VALVE BOX SHALL BE USED FOR WATER MAIN SIZE 6", 8", 10" AND 12" ONLY.
3. BACKFILL THE AREA AROUND THE VALVE BOX WITH [3\4" STONE.
4. VALVES WITHIN PAVED AREAS SHALL BE INSTALLED WITH A VALVE VAULT.

VALVE BOX INSTALLATION

ILLINOIS-AMERICAN WATER COMPANY STANDARD

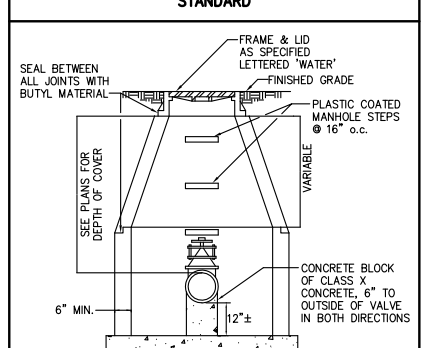

NOTES:
1. VALVES WITHIN PAVED AREAS SHALL BE INSTALLED WITH A VALVE VAULT.
2. VALVE VAULT DIA. SHALL BE 4' FOR 6", 8" AND 10" VALVES, AND 5' DIA. FOR VALVES GREATED THAN 10".

VALVE VAULT DETAIL

ILLINOIS-AMERICAN WATER COMPANY STANDARD

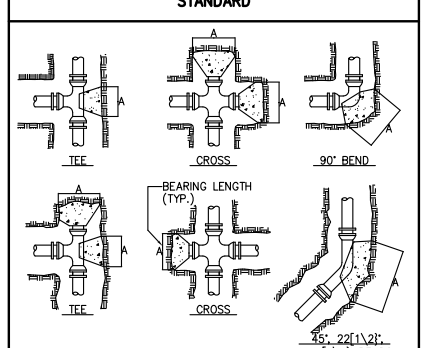

A=MINIMUM BEARING AREA IN SQUARE FEET*

PIPE	BENDS (DEGREES)					DEAD
SIZE	11[1\4	22[1\2	45	90	TEE	END
6"	1.0	2.5	4.5	8.0	5.5	5.5
8"	2.0	4.0	7.5	14.0	10.0	10.0
10"	3.0	6.0	11.0	20.5	14.5	14.5
12"	4.0	8.0	16.0	29.0	20.5	20.5

* BEARING AREAS ARE BASED ON SOIL HAVING AN ALLOWED SAFE LATERAL BEARING OF 1 TON PER SQUARE FOOT. AREAS MUST BE REVISED FOR SOILS WITH A LOWER BEARING CAPACITY.

THRUST BLOCK DETAIL

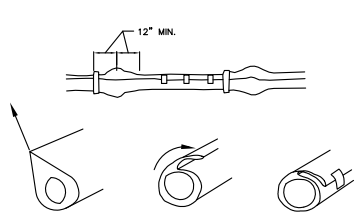

NOTE: REPAIR ALL SMALL RIPS, TEARS OR OTHER TUBE DAMAGE WITH ADHESIVE TAPE.

ONE LENGTH OF POLYETHYLENE TUBE FOR EACH LENGTH OF PIPE, OVERLAPPED AT JOINT.

POLYETHYLENE ENCASEMENT

ILLINOIS-AMERICAN WATER COMPANY STANDARD

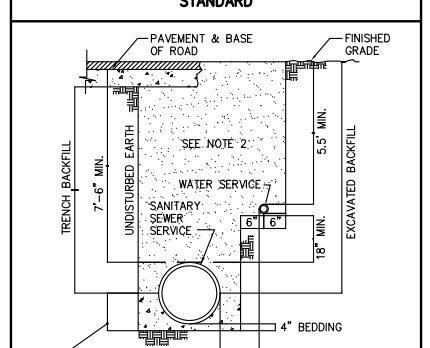

NOTES:
1. PROVIDE 10' SEPARATION BETWEEN THE SANITARY SEWER AND WATER SERVICE LINE. BENCHING IS TO BE ALLOWED ONLY WHEN THE REQUIRED SEPARATION IS NOT OBTAINABLE.
2. BACKFILL WITH EXCAVATED MATERIAL EXCEPT WHERE TRENCH MATERIAL IS REQUIRED.

BUILDING SERVICES SEPARATION

ILLINOIS-AMERICAN WATER COMPANY STANDARD

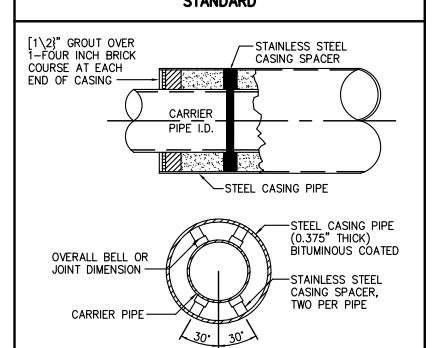

NOTES:
1. THE WATER MAIN SHALL BE 'CENTER SPACED' AND RESTRAINED ON TOP AND BOTTOM UTILIZING TWO CASING SPACERS EQUALLY SPACED PER LENGTH OF PIPE.
2. CASING SPACERS ARE TO BE CASCADE MFG. BRAND OR APPROVED EQUAL.
3. CASING IS TO BE SEALED AT BOTH ENDS WITH A MASONARY CAP AND MADE WATER-TIGHT.
4. WATER MAIN JOINTS WITHIN THE CASING SHALL BE RESTRAINED UTILIZING U.S. PIPE FIELD LOK GASKETS OR APPROVED EQUAL.

PIPE CASING DETAIL FOR WATER MAINS

ILLINOIS-AMERICAN WATER COMPANY STANDARD

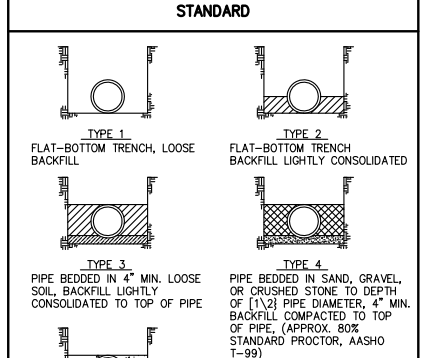

NOTES:
1. FOR 30" AND LARGER PIPE. CONSIDERATION SHOULD BE GIVEN TO THE USE OF LAYING CONDITIONS OTHER THAN TYPE 1.
2. "FLAT BOTTOM" IS DEFINED AS UNDISTURBED EARTH.
3. "LOOSE SOIL" IS DEFINED AS NATIVE SOIL EXCAVATED FROM THE TRENCH, FREE OF ROCKS, FOREIGN MATERIALS, AND FROZEN EARTH.

LAYING CONDITIONS FOR DUCTILE IRON PIPE

K:\ChicagoExecAp\0829008 Txy E\Draw\Sheets\Taxiway
FILE: txy-watermain dtl.dwg
LAYOUT: Layout1
UPDATE BY: mkatz
SURVEY BOOK #
DATE: Fri 4/1/11 9:17am
XREF DWG: tb.dwg
tbclnt.dwg
tbclnt_txy.dwg

REVISIONS

NUMBER	BY	DATE

0 1 2
THIS BAR IS EQUAL TO 2" AT FULL SCALE (34X22).

CHICAGO EXECUTIVE AIRPORT
WHEELING/PROSPECT HEIGHTS, ILLINOIS
CONSTRUCT PARTIAL PARALLEL TAXIWAY ECHO AND PARTIAL OVERLAY OF TAXIWAY ECHO

WATERMAIN DETAILS

© Copyright CMT, Inc.

CMT
CRAWFORD, MURPHY & TILLY, INC.
CONSULTING ENGINEERS
License No. 184-000613

CHICAGO EXECUTIVE AIRPORT

DESIGN BY:	MLK
DRAWN BY:	MJW
CHECKED BY:	MLK
APPROVED BY:	DLP
DATE:	04/22/11
JOB No:	08290-08

ILLINOIS PROJECT: PWK-3244
A.I.P. PROJECT: 3-17-0018-B32