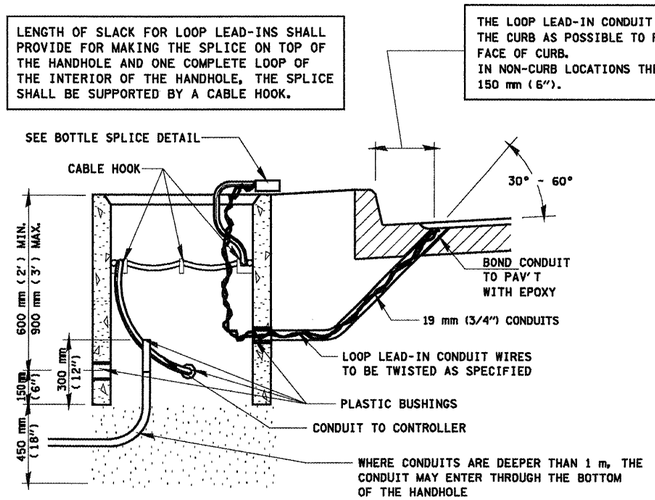

HANDHOLE CABLE CONNECTIONS

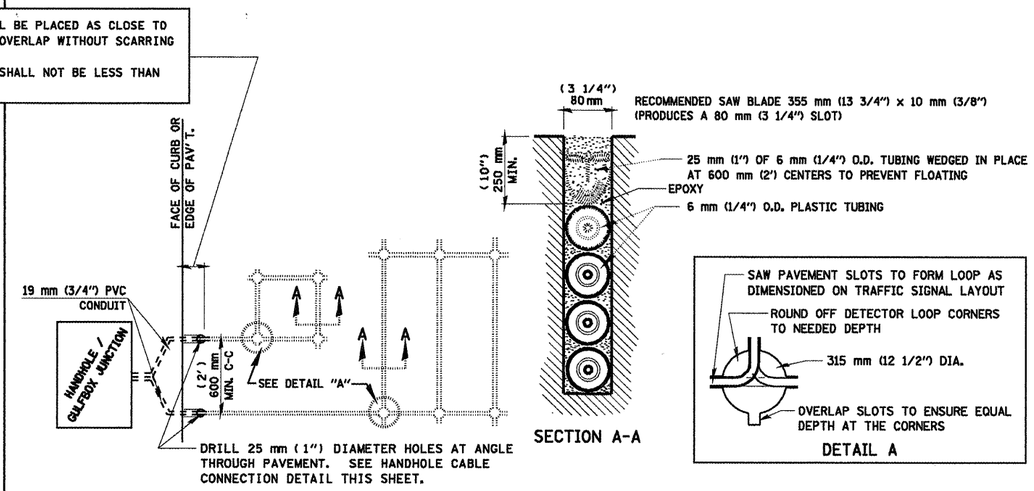

PAVEMENT SAWING DETAIL FOR TUBE ENCASED DETECTOR LOOP WIRE

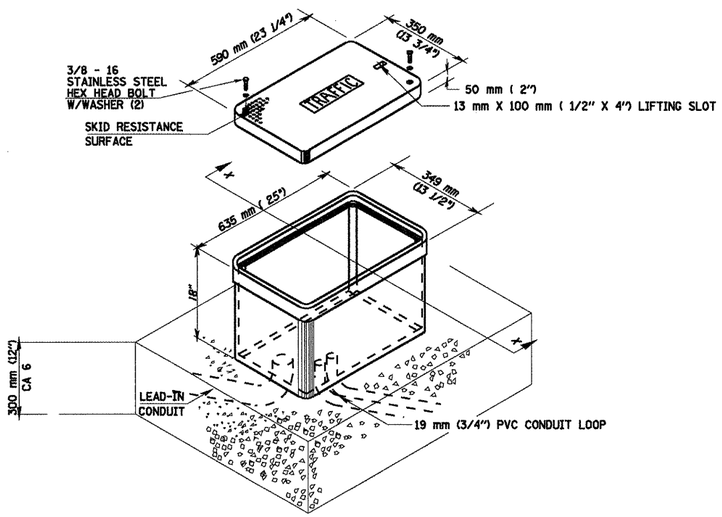

MINIMUM DIMENSIONS

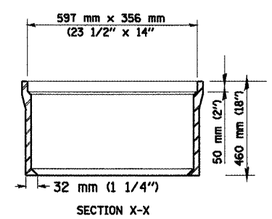

SECTION X-X

GULFBOX JUNCTION (SPECIAL)

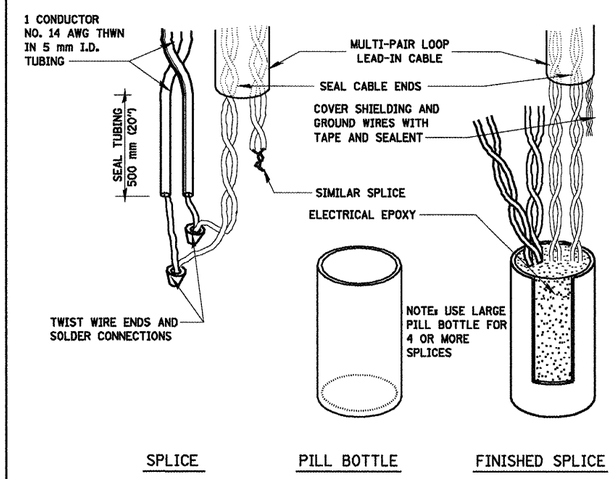

BOTTLE SPLICE DETAIL

*-325, 42
**- 20RS-7, 21RS-6, 104RS, 105RS-4

FILE NAME = c:\pw_work\PWIDOT\LAUGHLINRL\d0105356\D572C52-sht-ts.dgn	USER NAME = laughlinrl	DESIGNED -	REVISED -	STATE OF ILLINOIS DEPARTMENT OF TRANSPORTATION	TRAFFIC DETECTOR LOOP DETAILS	F.A.P. RTE.	SECTION	COUNTY	TOTAL SHEETS / SHEET NO.
	PLOT SCALE = 40.0000 ' / IN.	DRAWN -	REVISED -			*	**	MONTGOMERY	60 / 58
	PLOT DATE = Mar-26-2010 12:00:51PM	CHECKED -	REVISED -					CONTRACT NO. 72C52	
		DATE -	REVISED -		SCALE: / SHEET NO. 3 OF 5 SHEETS / STA. / TO STA.			ILLINOIS FED. AID PROJECT	