STATE OF ILLINOIS
DEPARTMENT OF TRANSPORTATION

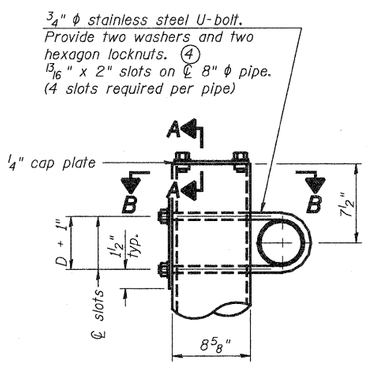

DETAIL A

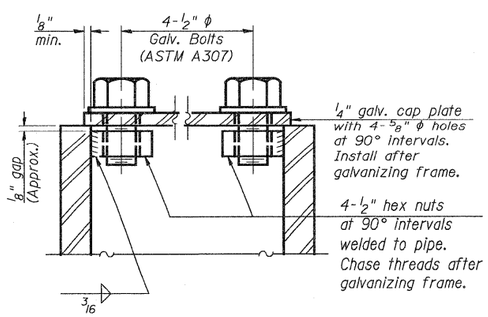

SECTION A-A

As an alternate to bolts, may use galvanized drive-fit caps installed after galvanizing frame.

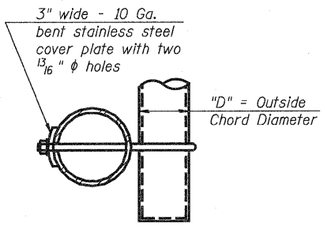

SECTION B-B

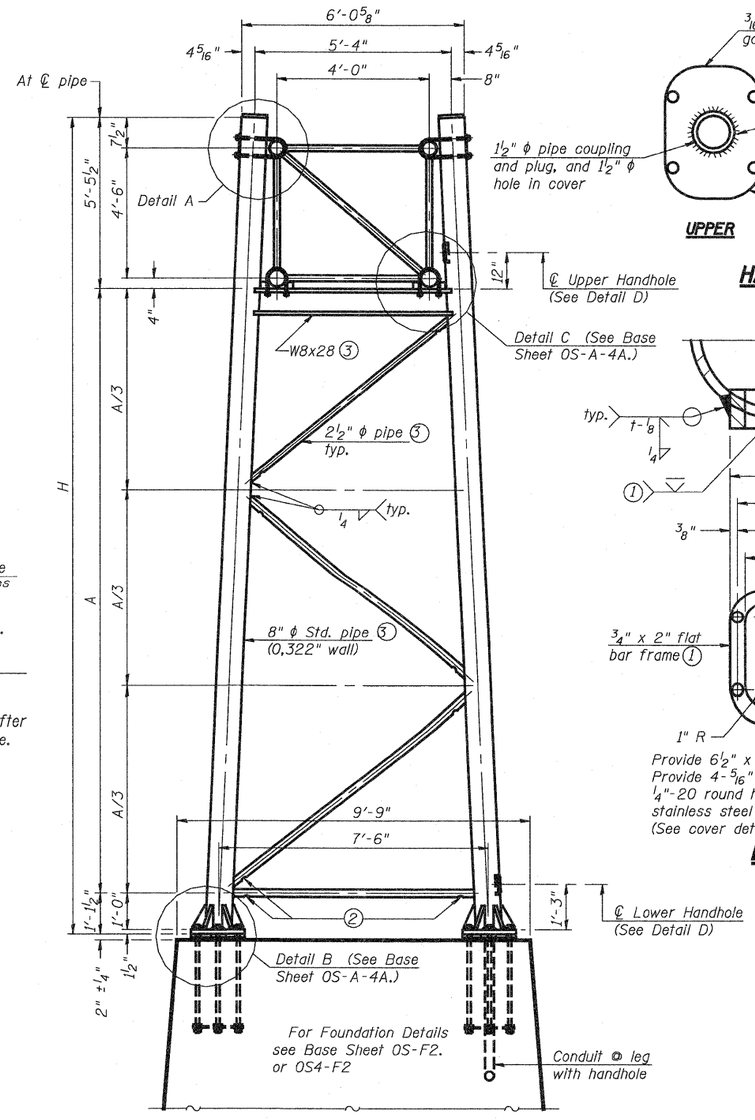

SIDE ELEVATION

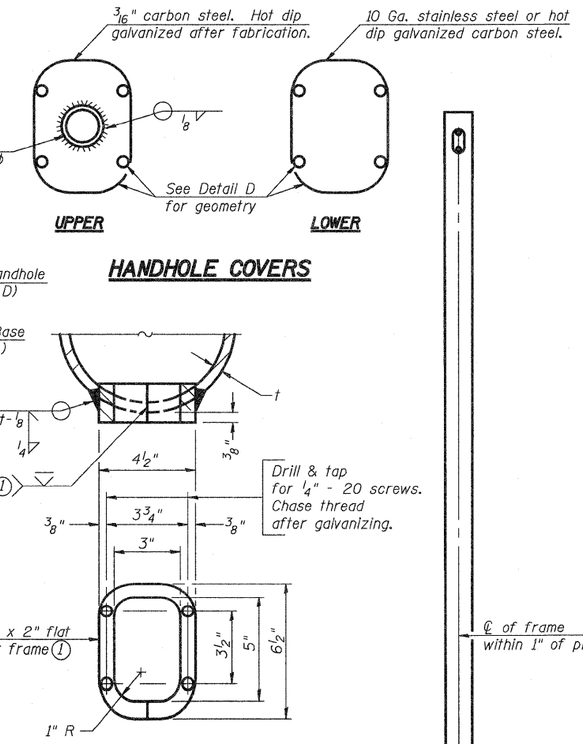

HANDHOLE COVERS

DETAIL D

END ELEVATION

Support Design Loads: See Base Sheet OS-A-1 for design and loading criteria.
Load combinations checked include deadload plus:
a) 100% wind normal to sign, 20% parallel to sign
b) 60% wind normal to sign, 30% parallel to sign

(1) In lieu of fabricated handhole frame as shown, may cut from 2" plate (rolling direction vertical). All cut faces to be ground to ANSI Roughness of 500 μin or less.

(2) Galvanizing vent holes of adequate size shall be provided on underside at each end of bracing pipes. Alternately, holes may be provided in wall of pipe column. All vent holes shall be drilled and de-burred, typ.

(3) Steel pipe, plate, carbon steel handhole covers and rolled sections shall be hot dip galvanized after fabrication. Painting is not permitted. See Base Sheet OS-A-1.

(4) See General Notes for fasteners.

(5) Dimensions shown are based on selection criteria in the Sign Structures Manual. Nonstandard applications must have dimensions verified or amended as appropriate.

(6) "H" based on 15'-0" or actual sign height, whichever is greater.

Structure Number	Station	Support Left	Support Right	H (6)	A
7S025I070R091.4	2008+85		✓	26'-11"	20'-4"
7S025I070R091.4	2008+85	✓		27'-5"	20'-10"
7S025I070R091.8	2028+00		✓	27'-7"	21'-0"
7S025I070R091.8	2028+00	✓		27'-5"	20'-10"
7S025I057L158.0	2077+87		✓	28'-0"	21'-5"
7S025I057L158.0	2077+87	✓		28-0"	21'-5"

8" ϕ PIPE TRUSS SUPPORT FRAME

NUMBER	REVISION	DATE

DESIGNED -	ESW
CHECKED -	JWS
DRAWN -	PDB
CHECKED -	BRM

OS-A-4 12-1-08

OVERHEAD SIGN STRUCTURES
SUPPORT FRAME FOR TYPE I-A ALUMINUM TRUSS

SHEET NO.	F.A.I RTE.	SECTION	COUNTY	TOTAL SHEETS	SHEET NO.
16	57/70	(25-3)R	EFFINGHAM	1416	368
SHEETS 33			CONTRACT NO. 74296		
	FED. ROAD DIST. NO.	ILLINOIS	FED. AID PROJECT		