* As alternate to the bolted connection shown, the guide bars may be connected to the top bearing plate by groove welds or the guide bars and top bearing plate may be fabricated as a single piece.

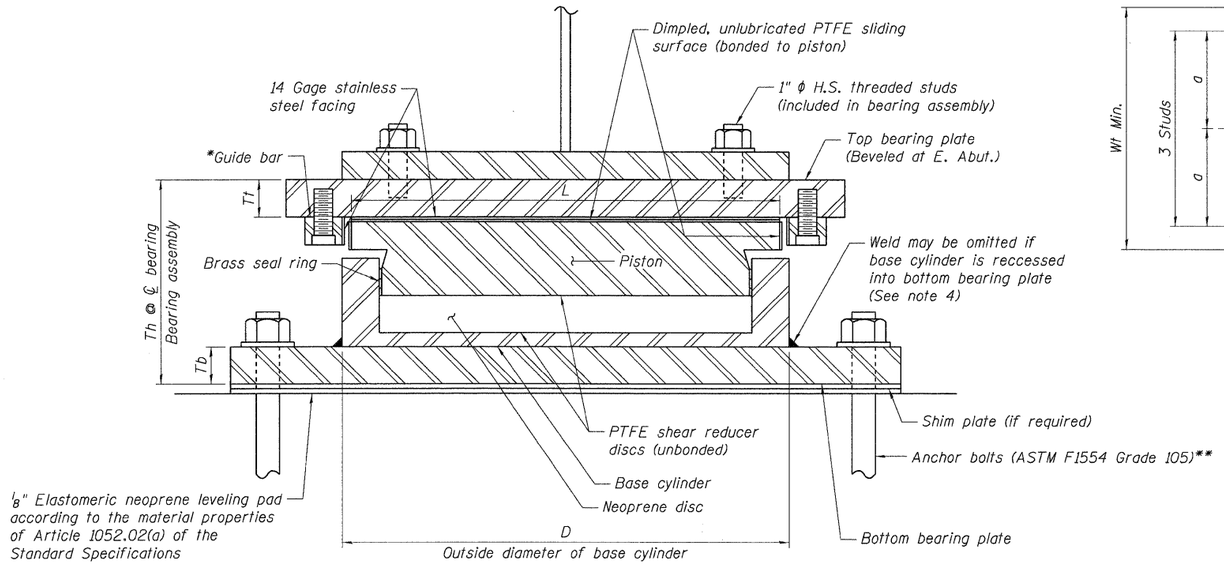

GUIDED EXPANSION POT BEARING

(Pier 23 & E. Abutment)

**1" ϕ x 12" Anchor bolts
2 1/4" x 2 1/4" x 5/16" ℙ. Washer under nut
1 1/2" ϕ holes in bottom bearing ℙ, typ.

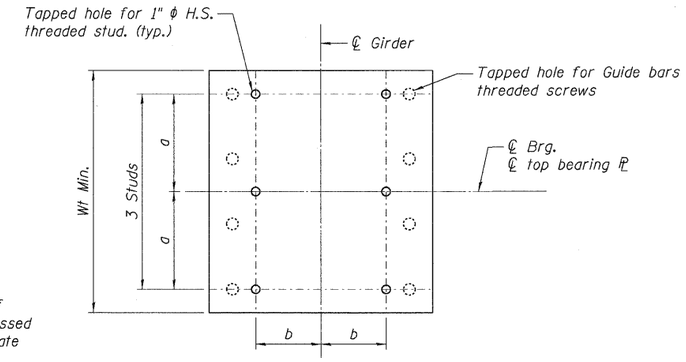

TOP BEARING ℙ PLAN

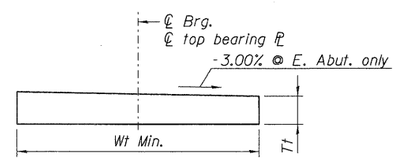

TOP BEARING ℙ ELEVATION

DIMENSIONS (IN)

Dimension	Pier 23/E. Abut.
D	13 7/8
L	14
Tb	2
Th	10 3/16
Tt	2
Wt	26
a	11
b	7
c	9
d	13 1/2

DESIGN DATA

Data	Pier 23	E. Abut.
Service Vertical Design Load (kips)	290	295
Factored Horizontal Design Load (kips)	75	90
Factored Design Rotation (rad)	0.02	0.02
Total Required Movement (in)	9 1/2	5 3/4

BILL OF MATERIAL

Item	Unit	Total
High Load Multi-Rotation Bearings, Guided Expansion, 300K	Each	22
Anchor Bolts, 1" ϕ	Each	88

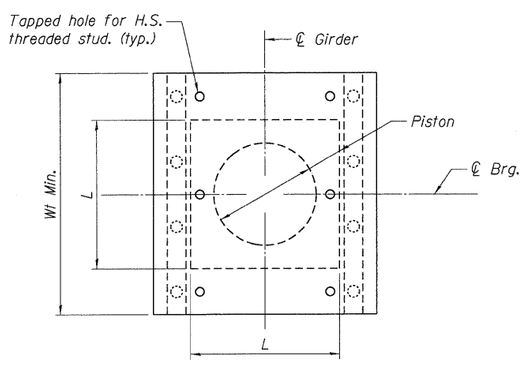

TOP BEARING ℙ AND PISTON PLAN

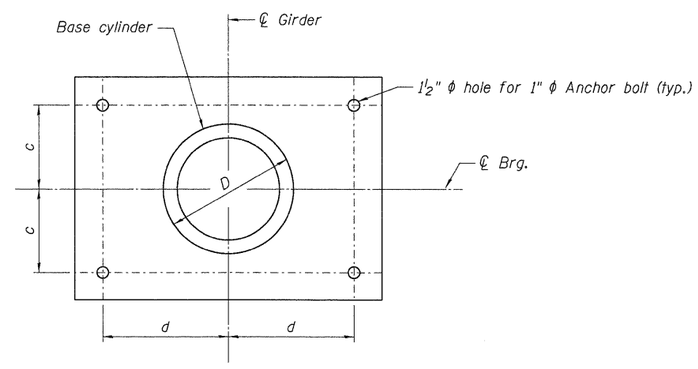

BOTTOM BEARING ℙ AND BASE CYLINDER PLAN

NOTES:

1. The structural steel plates of the bearing assembly shall conform to the requirements of AASHTO M 270 Grade 50W.
2. Two 1/8 in. adjusting shims shall be provided for each bearing in addition to all other plates or shims and placed as shown on bearing details.
3. H.S. bolts in bearing assembly shall be galvanized according to AASHTO M298 Class 50.
4. If base cylinder is recessed into the bottom bearing plate, the thickness of the bottom plate shall be Tb plus the depth of the recess.

\\082\2318-CONN-05-001-BR.DGN, \\082\2318-CONN-05-001-BR.DGN, \\082\2318-CONN-99-001-BR.DGN
6-03-2010, 10:49:23 BONDNJ03 \\VS-9814\WIVIAL_I2-TRANS.B7\2222-2886B-001\STRUCT\CAD\01 DESIGN\082\2318\SHEET\082\2318-CONN-05-001-SHT-BR.DGN

FILE NAME = $FILEL$	USER NAME = $USER$	DESIGNED - KK	REVISED -	STATE OF ILLINOIS DEPARTMENT OF TRANSPORTATION I-70 CONNECTION OVER NS, TRRA, MCT AND INDUSTRIAL DR.	BEARING DETAILS 1 OF 2	F.A.P. RTE.	SECTION	COUNTY	TOTAL SHEETS	SHEET NO.
		DRAWN - KK	REVISED -			998	82-2-1HVB	ST. CLAIR	285	183
TENG & ASSOCIATES, INC. ENGINEERS/ARCHITECTS/PLANNERS CHICAGO, ILLINOIS	PLOT SCALE = $SCALE$	CHECKED - TCU	REVISED -			SN 082-0318 (EB) & 0319 (WB)		CONTRACT NO. 76C44		
	PLOT DATE = $DATE$	DATE - 06/04/10	REVISED -		SCALE: SHEET NO. S-73 OF S-111 STA. 134+22.00 TO STA.	FED. ROAD DIST. NO.	ILLINOIS	FED. AID PROJECT		