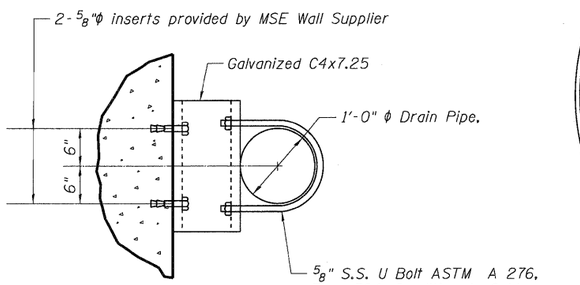

PLAN

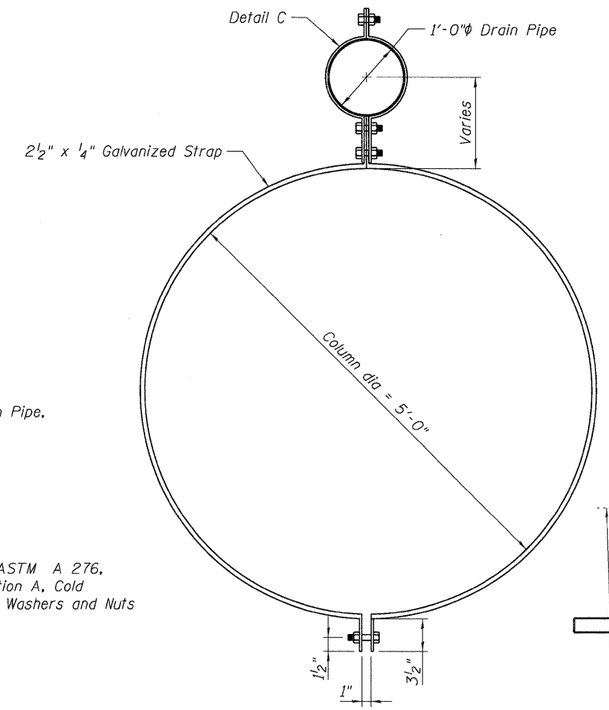

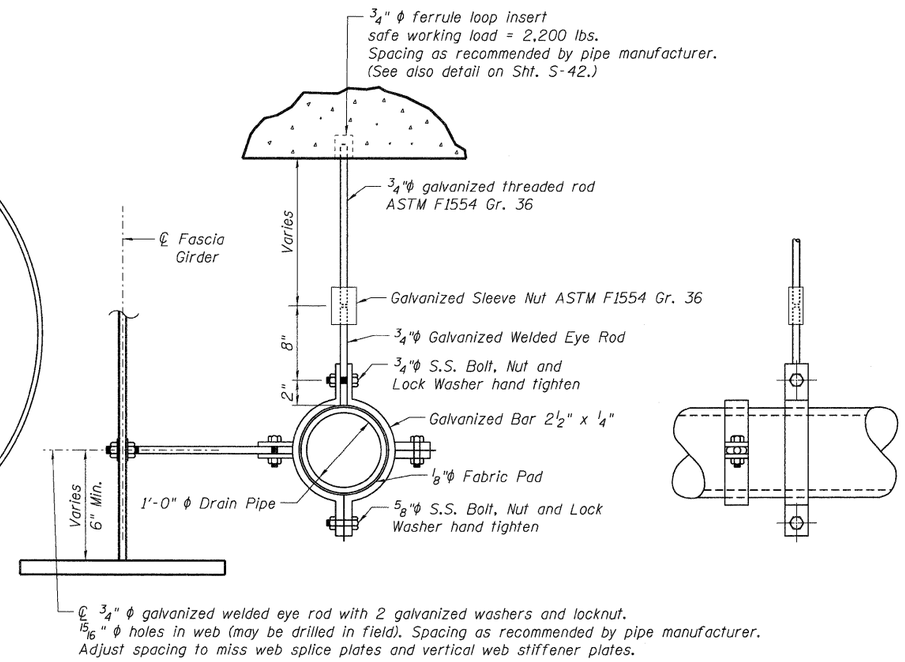

TYPICAL SECTION

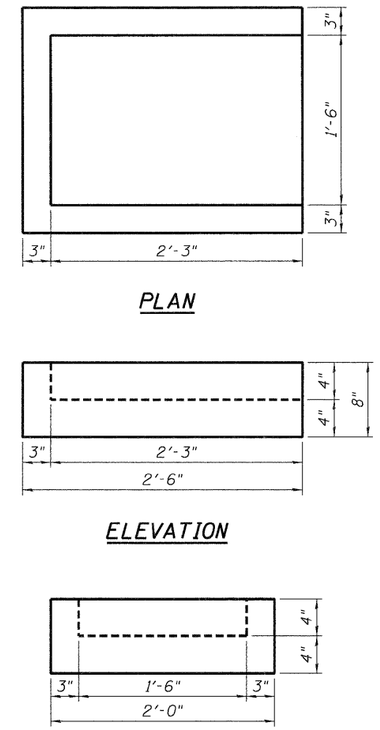

PLAN

ELEVATION

END VIEW

SPLASH BLOCK DETAIL

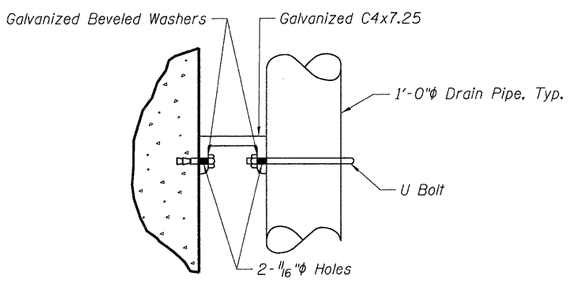

ELEVATION

DETAIL A - PIPE CLAMP DETAIL

(Use to support horizontal pipe runs along pier cap and vertical pipe runs along existing pier wall and abutment face)

DETAIL B - PIPE SUPPORT DETAIL

(Use to support Vertical Pipe runs along Column Piers)

DETAIL D - PIPE HANGER DETAILS

(Use similar pipe clamp at horizontal supports.)

NOTE:

All pipe hangers, supports and hardware shall be hot-dipped galvanized in accordance with AASHTO M232 (ASTM A153) unless otherwise noted. All bolts, nuts and washers shall be stainless steel. Stainless steel bolts shall conform to the requirements of ASTM A 193M (A193), Class 1, ASTM F593, TYPE 304 Grade B8. Stainless steel nuts shall conform to the requirements of AASHTO M 292, ASTM F594, TYPE 304 Grade 8 or 8F, and the washers shall conform to ASTM A 240, Type 302 or 304.

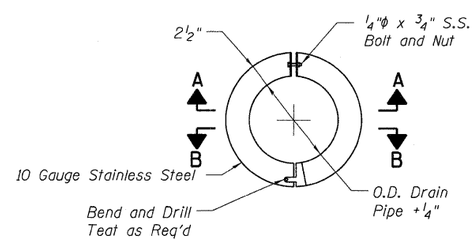

PLAN

(Looking Down)

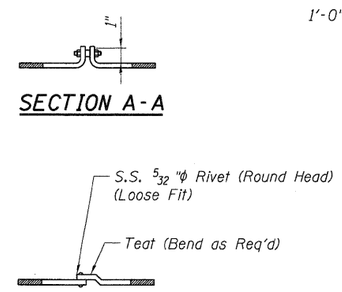

SECTION A-A

SECTION B-B

EXPANSION COLLAR DETAIL

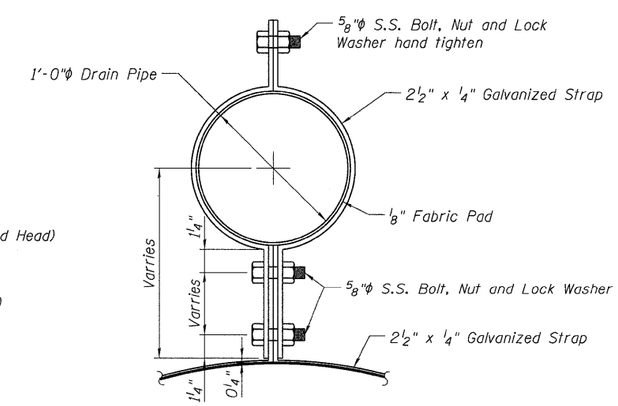

DETAIL C

FILE NAME = $FILEL$	USER NAME = $USER$	DESIGNED - TKL	REVISED -	STATE OF ILLINOIS DEPARTMENT OF TRANSPORTATION I-70 CONNECTION OVER NS, TRRA, MCT AND INDUSTRIAL DR.	BRIDGE DRAINAGE SYSTEM DETAILS	F.A.P. RTE.	SECTION	COUNTY	TOTAL SHEETS / SHEET NO.
		DRAWN - CPB	REVISED -			998	82-2-1HVB	ST. CLAIR	285 / 201
TENG & ASSOCIATES, INC. ENGINEERS/ARCHITECTS/PLANNERS CHICAGO, ILLINOIS	PLOT SCALE = $SCALE$	CHECKED - TCU	REVISED -			SN 082-0318 (EB) & 0319 (WB)		CONTRACT NO. 76C44	
	PLOT DATE = $DATE$	DATE - 06/04/10	REVISED -		SCALE: / SHEET NO. S-91 OF S-111 / STA. 134+22.00 TO STA.	FED. ROAD DIST. NO.	ILLINOIS	FED. AID PROJECT	

..\082@318-CONN-99-001-BGJDN..\082@318-CONN-05-001-JNJDN..\082@318-CONN-05-001-JNJDN
6-23-2010, 1:05:18 BDNDNJD \\FS-004A\HAVAL1\D-TRANS.07\C202\C2069-001\STRUCT\CAD\01 DESIGN\082@318\SHEET\082@318-CONN-05-002-SHT-DNJDN