| F.A.I. RTE. | SECTION | COUNTY | TOTAL SHEETS | SHEET NO. |
|---|---|---|---|---|
| 94 | 2005-036 I | COOK | 45 | 41 |
| STA. 135+99.6 (SB I-57) 2031+23.0 (NB FORD) | | TO STA. 1364+78.8 (SB RYAN) 2364+99.1 (NB RYAN) | | |
| FED. ROAD DIST. NO. | ILLINOIS | FED. AID PROJECT | | |

60A07

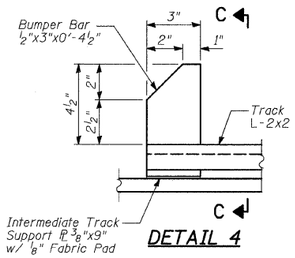


DETAIL 4

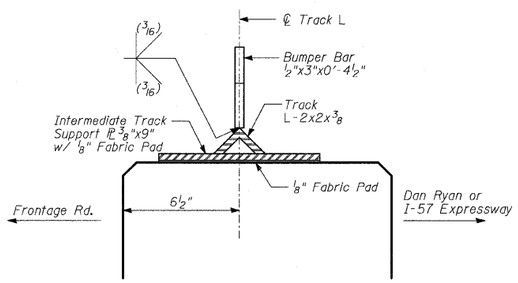


SECTION C-C

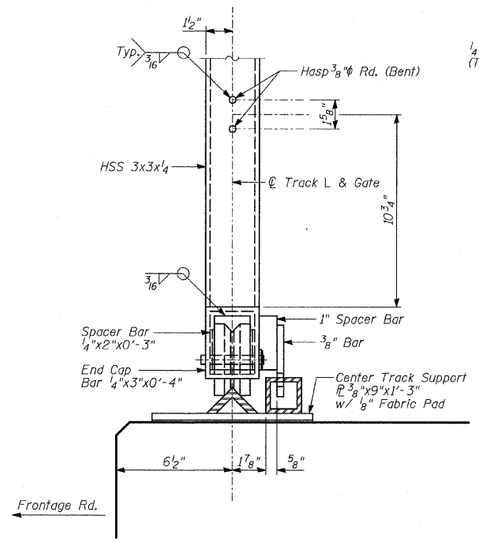


SECTION F-F

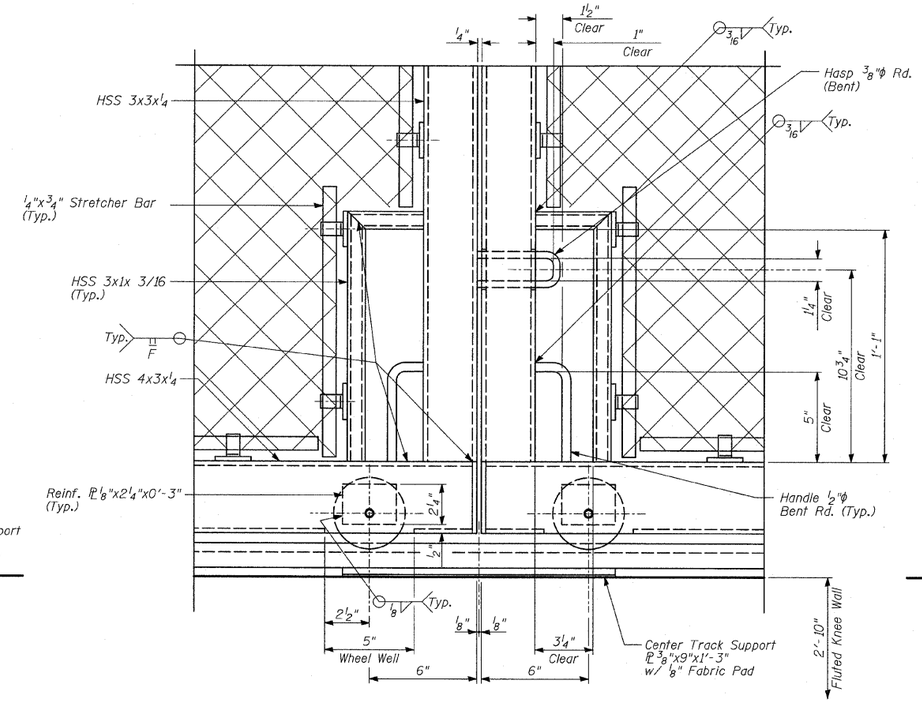


DETAIL 6

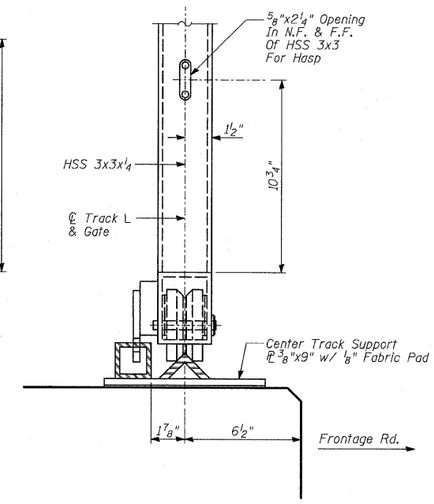


SECTION H-H

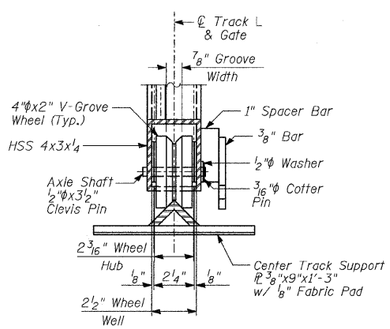


DETAIL 7

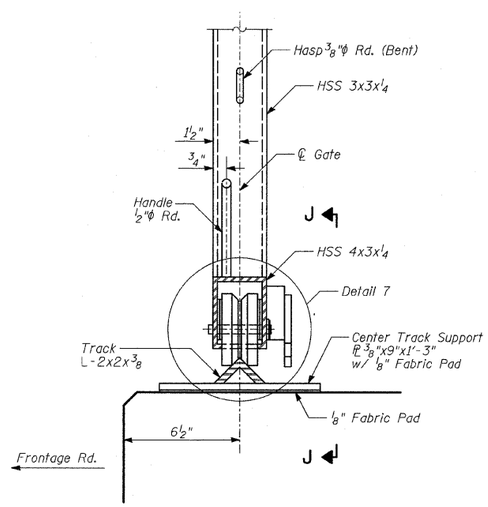


SECTION G-G

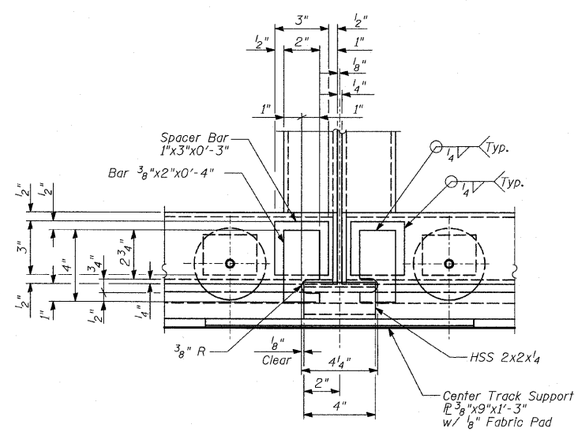


SECTION J-J

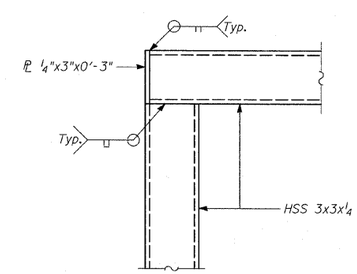


DETAIL 5

## NOTES:

1. For notes, see Sheet 38 of 45.
2. For Anchor Rod locations, see Sheet 38 of 45.
3. For Anchor Rod details, see Sheet 40 of 45.
4. N.F. - denotes Near Face.
5. F.F. - denotes Far Face.

| REVISIONS | |
|---|---|
| NAME | DATE |
| | |

ILLINOIS DEPARTMENT OF TRANSPORTATION

F.A.I. 94 (DAN RYAN EXPRESSWAY)

CHAIN LINK GATE ASSEMBLY (SPECIAL), GATE SECTIONS AND DETAILS

S.N. | DESIGNED BY: MAF
SCALE: N.T.S. | DRAWN BY: MAF
DATE: FEBRUARY 13, 2009 | CHECKED BY: MI

TY·LIN INTERNATIONAL

p:\0237.3\cad\c39\ms39dr\sht43.dgn 3/19/2009 11:46:17 AM