CONTRACT NO. 60B03

F.A.I. RTE.	SECTION	COUNTY	TOTAL SHEETS	SHEET NO.
55	99 (1&2) I-11	WILL	176	8
STA.		TO STA.		
FED. ROAD DIST. NO.	ILLINOIS	FED. AID PROJECT		

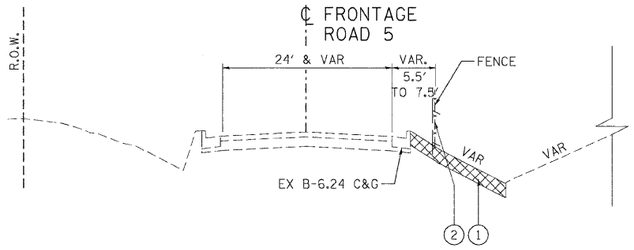

EXISTING ROADWAY TYPICAL SECTION
STA. 566+87.21 TO STA. 576+35.44

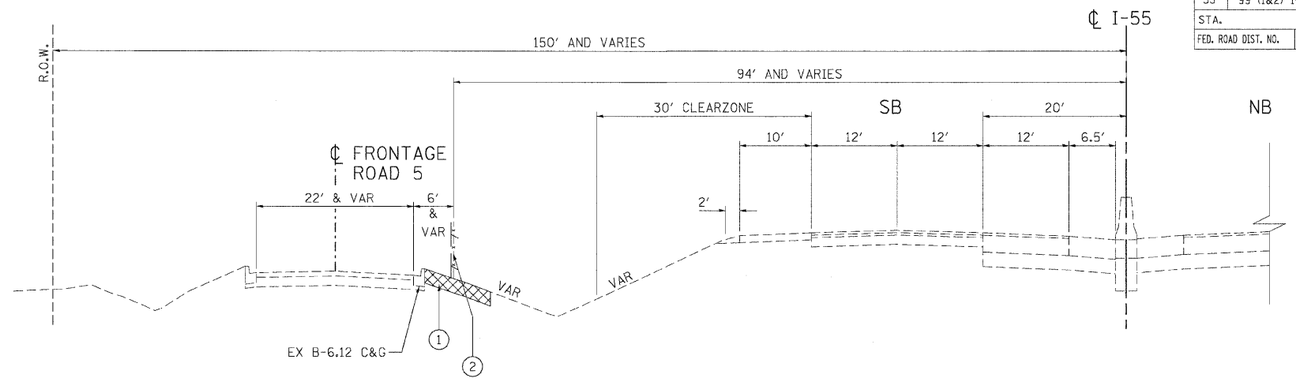

EXISTING ROADWAY TYPICAL SECTION
STA. 510+00.00 TO STA. 525+31.74

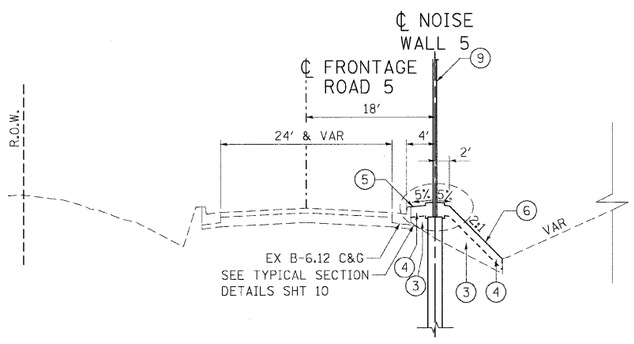

PROPOSED ROADWAY TYPICAL SECTION
STA. 566+87.21 TO STA. 576+35.44

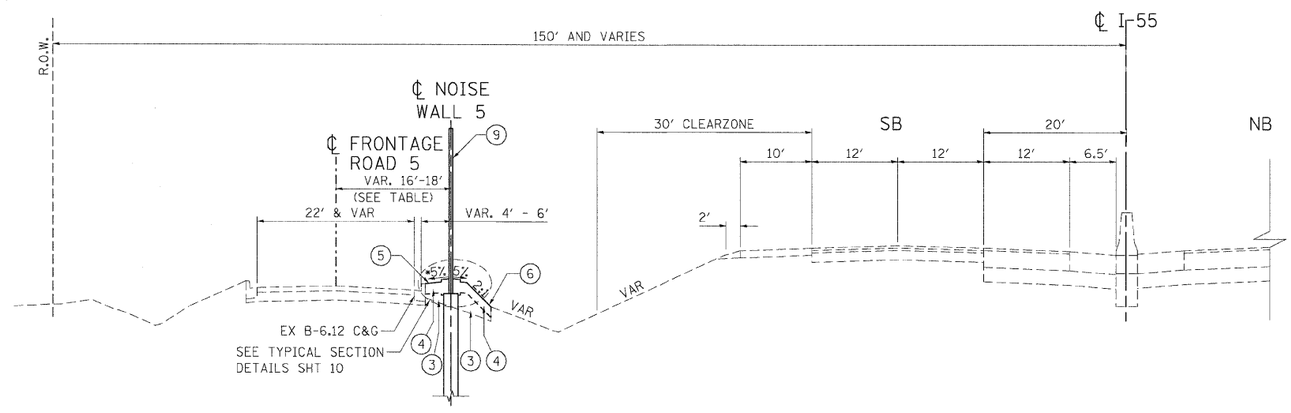

* VARIES FROM -5% AT STA. 510+00.00 TO 5% AT STA. 510+75.60

PROPOSED ROADWAY TYPICAL SECTION
STA. 510+00.00 TO STA. 525+31.74

FROM STA.	TO STA.	DISTANCE FROM ROAD ℄ TO WALL ℄
510+00.00	518+00.00	16′
518+00.00	519+00.00	TRANSITION FROM 16′ TO 18′
519+00.00	525+31.74	18′

LEGEND

1. REMOVAL AND DISPOSAL OF UNSUITABLE MATERIAL
2. FENCE REMOVAL (SEE ROADWAY PLANS FOR TYPE)
3. FURNISHED EXCAVATION
4. TOPSOIL FURNISH AND PLACE, 6″
5. SEEDING, CLASS 2A AND EROSION CONTROL BLANKET
6. SEEDING, CLASS 4 AND EROSION CONTROL BLANKET
7. HOT-MIX ASPHALT SHOULDERS, 3-3/4″
8. SUB-BASE GRANULAR MATERIAL, TYPE B 6″
9. NOISE ABATEMENT WALL, GROUND MOUNTED
10. NOISE ABATEMENT WALL, STRUCTURE MOUNTED
11. REMOVE AND RE-ERECT TRAFFIC BARRIER TERMINAL

NOTE:

DIMENSIONS ON TYPICAL SECTIONS ARE SHOWN TO CENTERLINE OF NOISE ABATEMENT WALL.

REVISIONS	
NAME	DATE

ILLINOIS DEPARTMENT OF TRANSPORTATION
FAI ROUTE 55 (BLACK ROAD TO U.S. ROUTE 30)
NOISE ABATEMENT WALLS

TYPICAL SECTIONS
NOISE WALL 5 - WEST
STA. 510+00.00 TO STA. 525+31.74
& STA. 566+87.21 TO STA. 576+35.44

SCALE: N.T.S. DRAWN BY SKJ
DATE 02/06/09 CHECKED BY DDH

TENG
TENG & ASSOCIATES, INC.
ENGINEERS/ARCHITECTS/PLANNERS
CHICAGO, ILLINOIS

PLOT DATE = $DATE$
FILE NAME = $FILE$
PLOT SCALE = $SCALE$
USER NAME = $USER$

..\B0914A01.DGN..\XW1214RS2.DGN..\VA1214A01.DGN..\VR1214A01.DGN..\VR9914A01.DGN..\GN1214A100.DGN..\TS1214A03.SHT
2-03-2009,17:27:40 GARCIAAZ S:\DOCUMENT\22361501\CIVIL\DGN\TS1214A04.SHT