F.A.I. RTE.	SECTION	COUNTY	TOTAL SHEETS	SHEET NO.
94	1516.1 I-9	COOK	59	35
STA. 117+38.11 (SB I-57) 218+95.72 (NB I-57)		TO STA. 154+09.94 (SB I-57) 225+79.12 (NB I-57)		
FED. ROAD DIST. NO.	ILLINOIS	FED. AID PROJECT		

62977

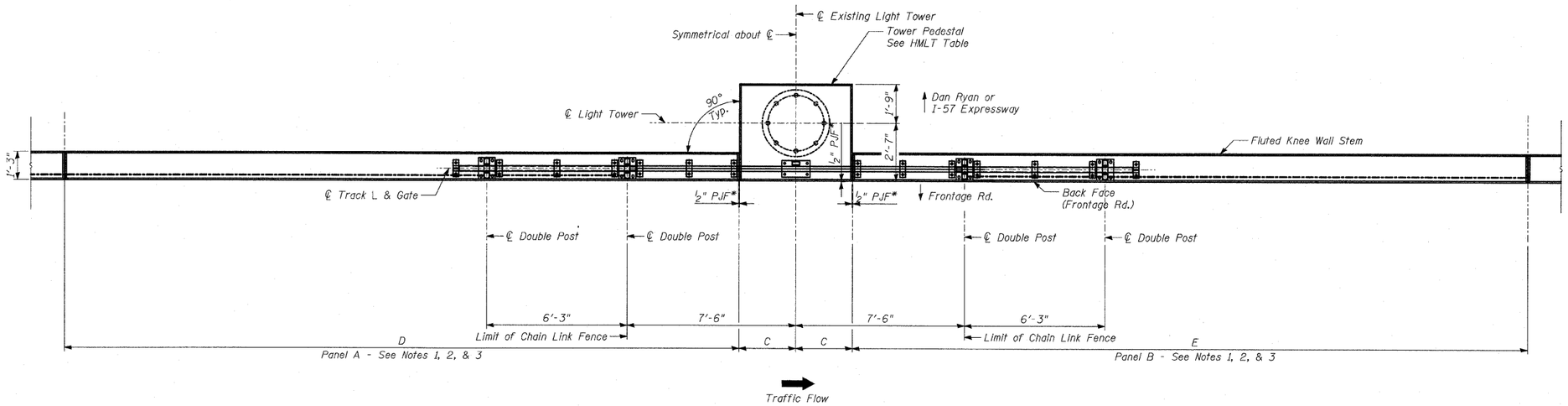

PLAN - CHAIN LINK GATE ASSEMBLY IN OPEN POSITION

HMLT TABLE

HMLT	C	D	E
6ACD4	2.5	17.9	18.0
6ACD5	2.5	34.4	25.0

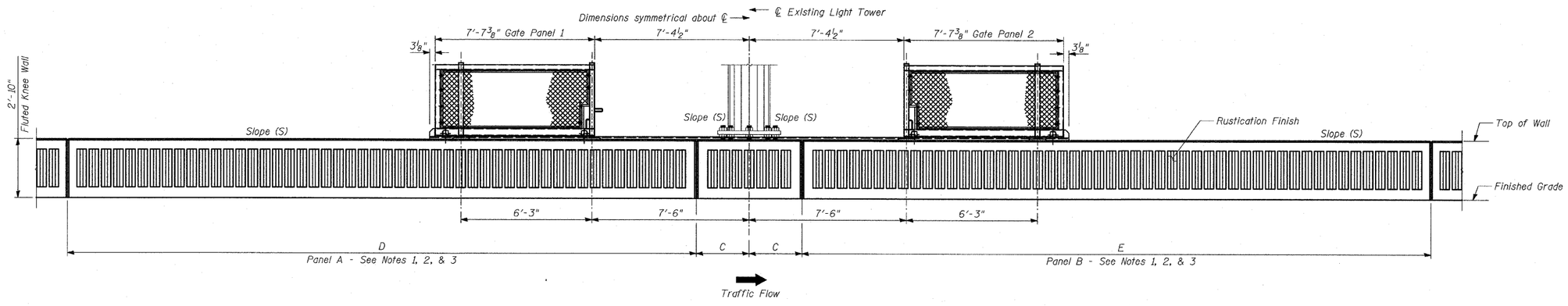

BACK FACE ELEVATION - LIMITS OF CHAIN LINK GATE ASSEMBLY IN OPEN POSITION

NOTES:

1. The Chain Link Gate Assembly (Special) is not included in this contract, but shall be furnished and installed by others in Contract 60A07.
2. Panels A & B shall be constructed to be aligned with the Back Face of existing High Mast Light Tower (HMLT).
3. The Slope (S) at the top of panels A & B and the HMLT foundation shall be the same.

* Cost included with "Fluted Knee Wall".

TY·LIN INTERNATIONAL

REVISIONS	
NAME	DATE

ILLINOIS DEPARTMENT OF TRANSPORTATION

F.A.I. 94 (DAN RYAN EXPRESSWAY)
FLUTED KNEE WALL ALONG LAFAYETTE AVE
N. WENTWORTH TO S. 95TH ST.
FLUTED KNEE WALL DETAILS AT HMLT

S.N.
SCALE: N.T.S.
DATE: JANUARY 16, 2009
DESIGNED BY: MAF
DRAWN BY: MAF
CHECKED BY: MI

P:\0237.3\Structur\C26a\fw26aDfls1033a.dgn
1/15/2009 12:29:48 PM