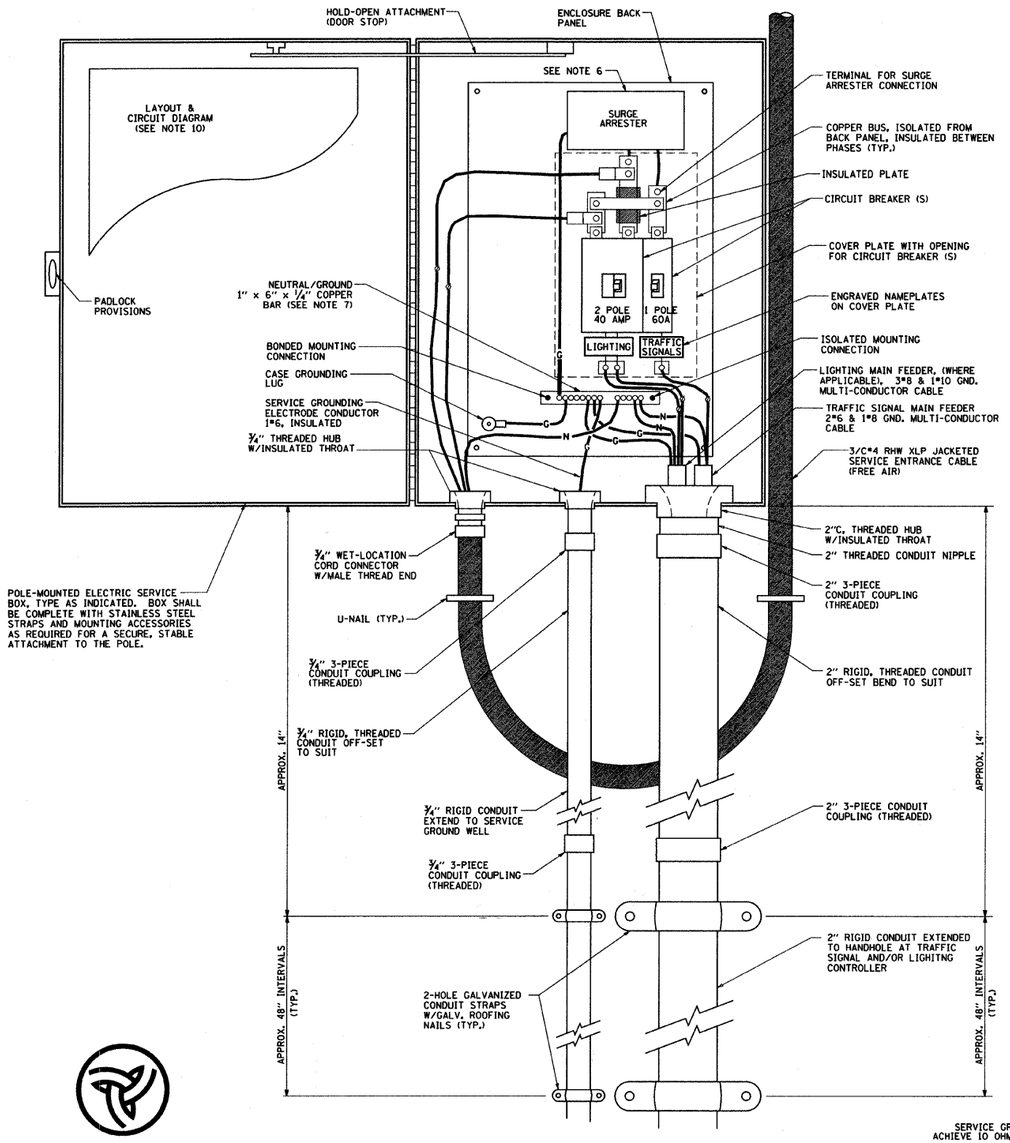

POLE-MOUNTED ELECTRIC SERVICE ENTRANCE
GENERAL LAYOUT DIAGRAM

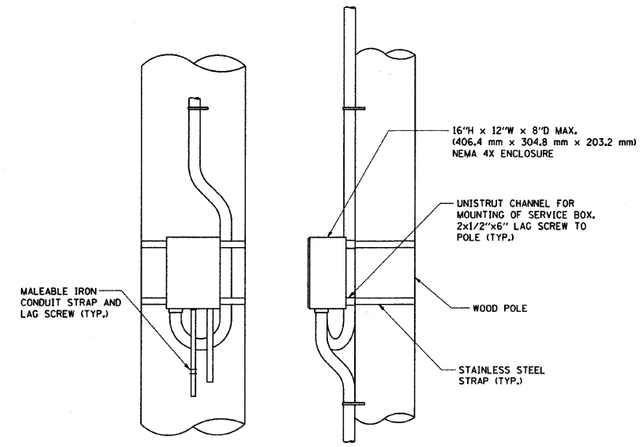

DISCONNECT MOUNTING DETAIL
N.T.S.

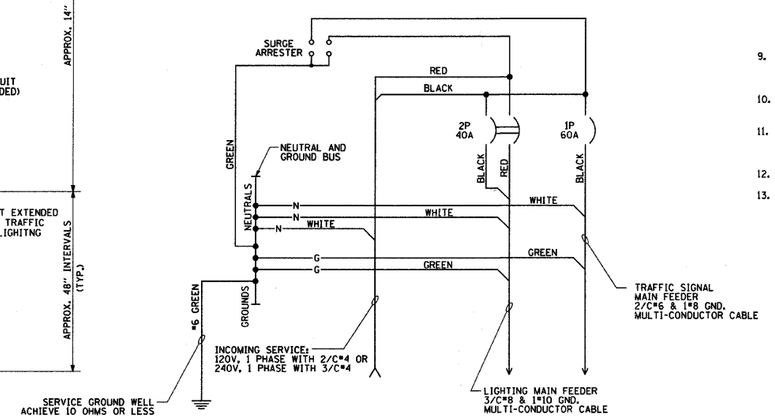

SCHEMATIC DIAGRAM

NOTES:

1. ELECTRIC SERVICE SHALL BE OF THE VOLTAGE INDICATED OR DESIGNATED BY THE ENGINEER, AND SERVICE DROP CABLE SHALL BE COMPATIBLE WITH THE SERVICE ACCORDINGLY. SOME INSTALLATIONS MAY CALL FOR SERVICE ENTRANCE EQUIPMENT SUITABLE FOR 3-WIRE SERVICE EVEN THOUGH INITIALLY WIRED FOR 2-WIRE SERVICE.
2. THE POLE-MOUNTED ELECTRIC SERVICE BOX DETAIL DEPICTS THE BASIC CONSTRUCTION OF THE EQUIPMENT. SLIGHT MODIFICATIONS APPLY FOR DIFFERING SERVICES AND APPLICATIONS AS FOLLOWS:
   - TYPE A — FULLY EQUIPPED FOR 240/120V. 3W SERVICE, COMPLETE WITH LIGHTING MAIN BREAKER
   - TYPE A1 — FULLY EQUIPPED FOR 240/120V. 3W SERVICE, BLANK COVER IN LIEU OF LIGHTING MAIN BREAKER
   - TYPE B — EQUIPPED FOR 120V. SERVICE, COMPLETE WITH 1P, 60A. TRAFFIC SIGNALS MAIN BREAKER
   - TYPE B1 — EQUIPPED FOR 120V. SERVICE, COMPLETE WITH 1P, 40A. TRAFFIC SURVEILLANCE MAIN BREAKER
3. THE ELECTRIC SERVICE EQUIPMENT ASSEMBLY SHALL BE UL LISTED AS SUITABLE FOR USE AS SERVICE ENTRANCE EQUIPMENT.
4. THE ELECTRIC SERVICE EQUIPMENT ENCLOSURE SHALL BE NEMA 4X STAINLESS STEEL, NOMINALLY 12"W X 16"H X 8"D, WITH A PIANO-HINGED DOOR, STEEL BACK PANEL, FAST-ACTING STAINLESS STEEL ENCLOSURE CLAMPS, PADLOCK PROVISIONS AND DOOR STOP, HOFFMAN CATALOG NO. A-16H1208SS6LP/A-16 P12/A-DSTOPK/C-PMK12, OR APPROVED EQUAL.
5. CIRCUIT BREAKERS SHALL BE THERMAL MAGNETIC BOLT-ON TYPE WITH A MINIMUM INTERRUPTING CAPACITY OF 25,000 SYMMETRICAL AMPERES AT 240 VOLTS. THEY SHALL BE LOCKABLE IN THE "OFF" POSITION FOR COMPLIANCE WITH OSHA LOCK-OUT/TAG-OUT REQUIREMENTS. HANDLES SHALL BE TRIP FREE.
6. THE SURGE PROTECTOR SHALL BE SUITABLE FOR 240/120 VOLT SINGLE PHASE 60HZ AC ELECTRICAL SERVICE, WITH A SURGE ENERGY CAPABILITY OF 2160 JOULES OR BETTER AT 8/20 MICRO-SECONDS, RATED -40 TO 60 DEGREES C., WITH LED OPERATING INDICATORS, AND SHALL BE UL LISTED PER UL 1449, CUTLER-HAMMER CMOV230L065XST OR APPROVED EQUAL.
7. BUS BARS, CONNECTORS, AND LUGS SHALL BE COPPER, INSULATED AND ISOLATED, AND CONFIGURED TO PREVENT SHORTED CONDITIONS FROM TIGHTENING TERMINATIONS, ETC. THE OVERALL BUS SECTION SHALL BE CONFIGURED BEHIND AN INSULATING BARRIER SHIELD WHICH IS REMOVABLE FOR ACCESS TO CONNECTIONS, OR THE ASSEMBLY SHALL BE A MANUFACTURED SPECIALTY PANELBOARD, CUTLER-HAMMER PRL2A OR APPROVED EQUAL.
8. THE COMBINATION GROUND AND NEUTRAL BAR SHALL BE CONFIGURED WITH SEPARATE GROUND AND NEUTRAL SECTIONS AND SPARE TERMINALS AS INDICATED. THE HEADS OF GROUND SCREWS SHALL BE PAINTED GREEN. THE HEADS OF NEUTRAL SCREWS SHALL BE PAINTED WHITE. THE SERVICE NEUTRAL AND SERVICE GROUNDING ELECTRODE CONDUCTOR SHALL BE TERMINATED ADJACENT TO EACH OTHER AT THE DIVIDE BETWEEN THE SECTIONS AND WIRING SHALL BE TERMINATED ONLY UPON THE APPROPRIATE SECTION.
9. THE WIRING TERMINALS, INCLUDING THE GROUND/NEUTRAL BAR SHALL BE ARRANGED TO PROVIDE ADEQUATE ROOM FOR PERFORMING FIELD TERMINATIONS.
10. A PLASTIC LAMINATED LAYOUT AND CIRCUIT DIAGRAM SHALL BE MECHANICALLY SECURED TO THE INTERIOR SIDE OF THE ENCLOSURE DOOR.
11. A 2-COLOR ENGRAVED PLASTIC NAMEPLATE, ATTACHED WITH SCREWS, AND ENGRAVED AS INDICATED, SHALL BE PROVIDED FOR EACH MAIN BREAKER.
12. LUGS AND CONNECTORS SHALL BE RATED FOR 75°C CONDUCTOR.
13. THE EXACT MOUNTING HEIGHT OF THE BOX SHALL BE FIELD DETERMINED TO AVOID OBSTRUCTIONS AND PUBLIC ACCESS. TYPICAL HEIGHT SHALL BE APPROXIMATELY 10 FEET ABOVE GRADE.

6" DECAL ON FRONT COVER

FILE NAME = W:\diststd\22x34\be230.dgn	USER NAME = gaglianobt	DESIGNED -	REVISED - R. TOMSONS 08-13-04	STATE OF ILLINOIS DEPARTMENT OF TRANSPORTATION	COMBINATION LIGHTING & TRAFFIC POLE MOUNTED ELECTRIC SERVICE BOX DETAIL	F.A. RTE.	SECTION	COUNTY	TOTAL SHEETS / SHEET NO.
		DRAWN -	REVISED -						26 / 19
	PLOT SCALE = 50.0000 ' / IN.	CHECKED -	REVISED -				BE-230	CONTRACT NO.	
	PLOT DATE = 1/4/2008	DATE -	REVISED -		SCALE: NONE / SHEET NO. 1 OF 1 SHEETS / STA. TO STA.	FED. ROAD DIST. NO. 1	ILLINOIS	FED. AID PROJECT	