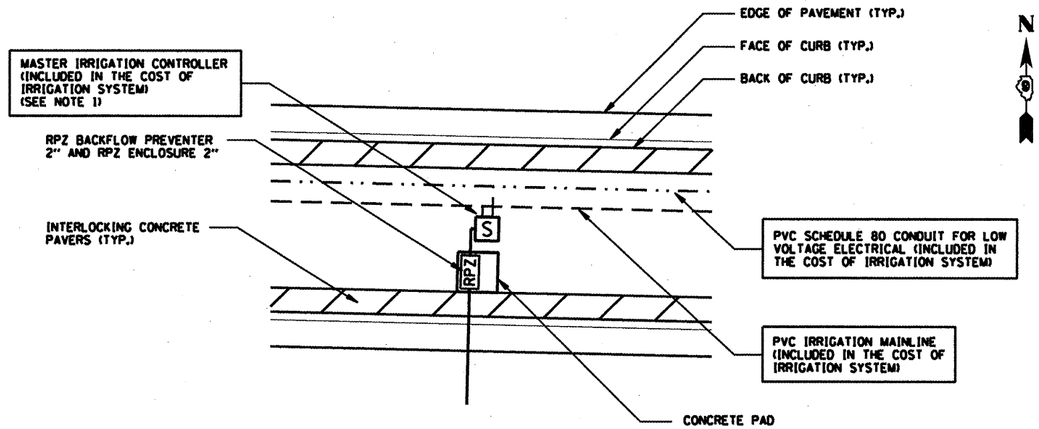

PLAN VIEW

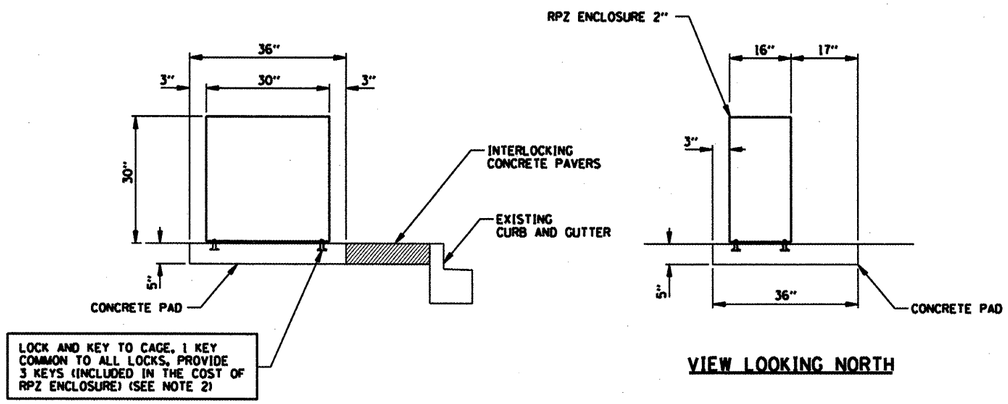

VIEW LOOKING WEST

VIEW LOOKING NORTH

NOTES:

1. THE IRRIGATION SYSTEM SHALL BE SOLAR POWERED UNLESS OTHERWISE APPROVED BY THE ENGINEER.
2. THE CONTRACTOR SHALL COORDINATE THE HARDWARE REQUIREMENTS FOR KEYING OF THE LOCK WITH THE RESIDENT ENGINEER.

RPZ LAYOUT AND ENCLOSURE DETAIL

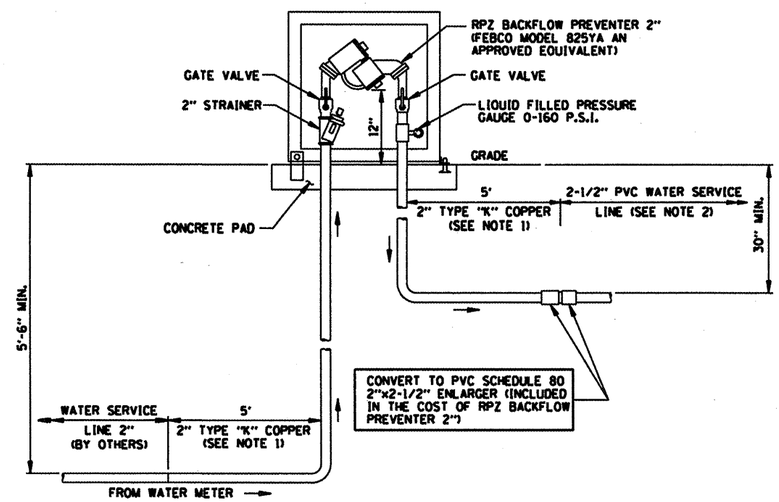

NOTES:

1. 2" TYPE "K" COPPER PIPE SHALL BE INCLUDED IN THE CONTRACT. UNIT PRICE FOR RPZ BACKFLOW PREVENTER 2".
2. 2-½" PVC WATER SERVICE LINE SHALL BE INCLUDED IN THE CONTRACT UNIT PRICE FOR IRRIGATION SYSTEM.

RPZ BACKFLOW PREVENTER INSTALLATION DETAIL

FILE NAME = c:\pw_work\PWIDOT\COLEMM\d0138303\d978096_sht_misc.dgn	USER NAME = colemm	DESIGNED -	REVISED -
		DRAWN -	REVISED -
	PLOT SCALE = 41.4703 ' / IN.	CHECKED -	REVISED -
	PLOT DATE = 5/7/2009	DATE -	REVISED -

STATE OF ILLINOIS
DEPARTMENT OF TRANSPORTATION

LOCATION #1 OLD IL 13 RPZ LAYOUT AND ENCLOSURE AND RPZ BACKFLOW PREVENTER INSTALLATION DETAILS

SCALE: NONE | SHEET NO. OF SHEETS | STA. TO STA.

F.A.I. RTE.	SECTION	COUNTY	TOTAL SHEETS	SHEET NO.
57	(X1-6)LS-2	WILLIAMSON	10	9
		CONTRACT NO. 78096		
		ILLINOIS FED. AID PROJECT		