07-31-2026 LETTING ITEM 009

F.A.I RTE.	SECTION	COUNTY	TOTAL SHEETS	SHEET NO.
80	FAI 80 23 Bridge Replacement 2	COOK	158	1
	ILLINOIS	CONTRACT NO. 62W20		

* 158 + 6 = 164 TOTAL SHEETS

STATE OF ILLINOIS
DEPARTMENT OF TRANSPORTATION

PROPOSED
HIGHWAY PLANS

FAI 80: (I-80 AT OAK PARK AVENUE (OVERHEAD)
SECTION FAI 80 23 BRIDGE REPLACEMENT 2
PROJECT NHPP-EU65(445)
BRIDGE SUPERSTRUCTURE REPLACEMENT
(S.N. 016-0927)
COOK COUNTY
C-91-113-24

FOR INDEX OF SHEETS, SEE SHEET NO. 2

THIS PROJECT IS LOCATED IN THE VILLAGE OF TINLEY PARK IN COOK COUNTY

OAK PARK AVENUE
FUNCTIONAL CLASSIFICATION
MAJOR COLLECTOR
2023 ADT = 2700
P.V. = 93.0% S.U. = 6.0% M.U. = 1.0%
POSTED SPEED LIMIT = 45 MPH
DESIGN SPEED LIMIT = 50 MPH

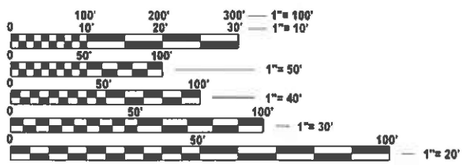

FULL SIZE PLANS HAVE BEEN PREPARED USING STANDARD ENGINEERING SCALES. REDUCED SIZED PLANS WILL NOT CONFORM TO STANDARD SCALES. IN MAKING MEASUREMENTS ON REDUCED PLANS, THE ABOVE SCALES MAY BE USED.

J.U.L.I.E.
JOINT UTILITY LOCATION INFORMATION FOR EXCAVATION
1-800-892-0123
OR 811

PROJECT MANAGER PRAVEEN KAINI, P.E. (847) 705-4237

CONTRACT NO. 62W20

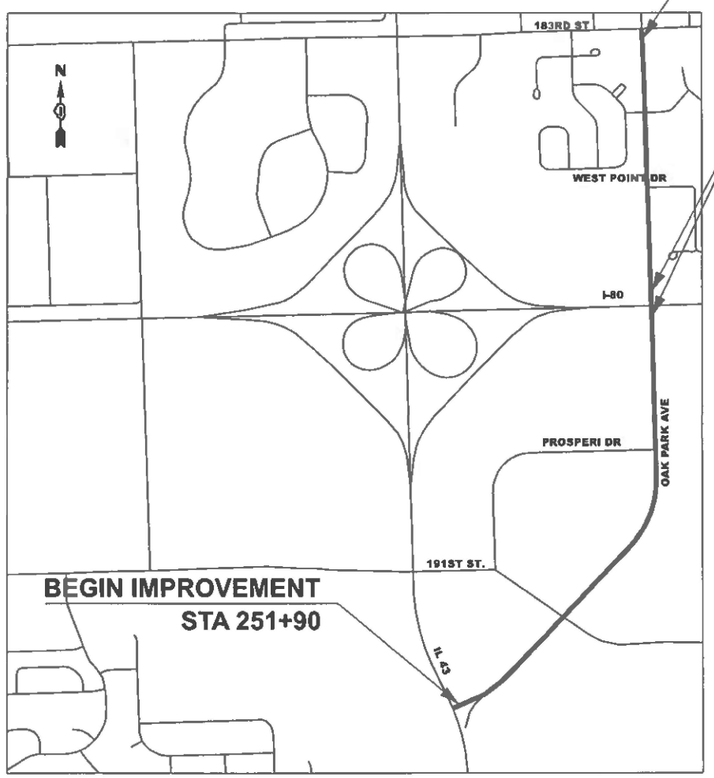

LOCATION MAP
N.T.S.

GROSS LENGTH = 7460 FT. = 1.413 MILE
NET LENGTH = 7460 FT. = 1.413 MILE

BRIDGE IMPROVEMENT
S.N. 016-0927
STA 298+86.62
TO STA 301+13.53

WI-SKIES, LLC
JOSEPH D. MARSH, P.E.
062-061554
EXPIRES 11/30/2027
DATE: 06/24/2026
SIGNATURE AND SEAL
APPLIES TO DRAWINGS: 075A-075C

LICENSED PROFESSIONAL ENGINEER — JOSEPH D. MARSH — 062-061554 — STATE OF ILLINOIS

MILLENNIA PROFESSIONAL SERVICES
THOMAS V. NGO, P.E.
062-058379
EXPIRES 11/30/2027
DATE: 05/06/2026
SIGNATURE AND SEAL
APPLIES TO DRAWINGS: 1-14, 37-53, 73-75

062-058379 REGISTERED PROFESSIONAL ENGINEER OF ILLINOIS — THOMAS V. NGO

ARDMORE-RODERICK
SHAWN BRODASKI, P.E., S.E.
81-7569
EXPIRES 11/30/2026
DATE: 05/06/2026
SIGNATURE AND SEAL
APPLIES TO DRAWINGS: 76-111

STATE OF ILLINOIS — SHAWN T. BRODASKI — 81-7569 — REGISTERED STRUCTURAL ENGINEER

PRIMERA
JACK RICE, P.E.
062-070520
EXPIRES 11/30/2027
DATE: 05/06/2026
SIGNATURE AND SEAL
APPLIES TO DRAWINGS: 15-36, 63-72, 112-158

LICENSED PROFESSIONAL ENGINEER — JACK M. RICE — 062-070520 — STATE OF ILLINOIS

D-91-099-24



LOCATION OF SECTION INDICATED THUS: -

Ardmore Roderick

MILLENNIA PROFESSIONAL SERVICES — www.millennia.pro

Primera

STATE OF ILLINOIS
DEPARTMENT OF TRANSPORTATION

SUBMITTED May 5th 20 26
REGIONAL ENGINEER
June 26 20 26
ENGINEER OF DESIGN AND ENVIRONMENT
June 26 20 26
DIRECTOR OF HIGHWAYS PROJECT IMPLEMENTATION

PRINTED BY THE AUTHORITY OF THE STATE OF ILLINOIS

REV-SEP

INDEX OF SHEETS

1	COVER SHEET
2	INDEX OF SHEETS, HIGHWAY STANDARDS, AND COMMITMENTS
3	GENERAL NOTES
4-14A	SUMMARY OF QUANTITIES
15-22	TYPICAL SECTIONS
23-24	SCHEDULE OF QUANTITIES
25-26	ALIGNMENT AND TIES
27-30	REMOVAL PLAN
31-36	PLAN AND PROFILE
37-44	SUGGESTED STAGES OF CONSTRUCTION AND TRAFFIC CONTROL PLAN
45-46	DETOUR PLAN
47-49	EROSION AND SEDIMENT CONTROL PLAN AND NOTES
50-53	DRAINAGE REMOVAL AND PROPOSED PLAN
54-62	PLAT OF HIGHWAYS
63-65	PAVEMENT MARKING & SIGNING
66	PCC CONNECTOR DETAIL
67	CONCRETE BARRIER TRANSITION DETAIL
68-72	ADA RAMP DETAILS
73-75	LANDSCAPING PLAN
75A-75E	LIGHTING PLANS
76-111	STRUCTURAL PLANS
112-141	CROSS SECTIONS
142	DETAIL OF STORM SEWER CONNECTION TO EXISTING SEWER (BD-07)
143	CURB OR CURB AND GUTTER REMOVAL AND REPLACEMENT (BD-24)
144	BUTT JOINT AND HMA TAPER DETAILS (BD-32)
145	BENCHING DETAIL FOR EMBANKMENT WIDENING (BD-51)
146	ENTRANCE AND EXIT RAMP CLOSURE DETAILS (TC-08)
147	TRAFFIC CONTROL DETAILS FOR FREEWAY & MULTI-LANE WEAVE (TC-09)
148	TRAFFIC CONTROL AND PROTECTION FOR SIDE ROADS, INTERSECTIONS, AND DRIVEWAYS (TC-10)
149	TYPICAL APPLICATIONS RAISED REFLECTIVE PAVEMENT MARKERS (SNOW-PLOW RESISTANT) (TC-11)
150-151	MULTI-LANE FREEWAY PAVEMENT MARKING DETAIL (TC-12)
152	DISTRICT ONE TYPICAL PAVEMENT MARKINGS (TC-13)
153	TRAFFIC CONTROL AND PROTECTION AT TURN BAYS (TO REMAIN OPEN TO TRAFFIC) (TC-14)
154	SHORT TERM PAVEMENT MARKING LETTERS AND SYMBOLS (TC-16)
155	TRAFFIC CONTROL DETAILS FOR FREEWAY SHOULDER CLOSURES AND PARTIAL RAMP CLOSURES (TC-17)
156	DETOUR SIGNING FOR CLOSING STATE HIGHWAYS (TC-21)
157	ARTERIAL ROAD INFORMATION SIGN (TC-22)
158	UTILITY VAULT DETAIL

COMMITMENTS

TO CONSERVE THE NORTHERN LONG EARED BAT (NLEB) AND TRICOLORED BAT (TCB), NO TREE REMOVAL SHALL OCCUR BETWEEN APRIL 1 AND OCTOBER 31 OF ANY GIVEN YEAR.

HIGHWAY STANDARDS

000001-09	STANDARD SYMBOLS, ABBREVIATIONS AND PATTERNS
001006	DECIMAL OF AN INCH AND OF A FOOT
202001-01	EARTH MEDIAN DITCH CHECK
280001-07	TEMPORARY EROSION CONTROL SYSTEMS
420001-11	PAVEMENT JOINTS
420401-13	PAVEMENT CONNECTOR (PCC) FOR BRIDGE APPROACH SLAB
424001-12	PERPENDICULAR CURB RAMPS FOR SIDEWALKS
424011-05	CORNER PARALLEL CURB RAMPS FOR SIDEWALKS
424021-07	DEPRESSED CORNER FOR SIDEWALKS
542301-03	PRECAST REINFORCED CONCRETE FLARED END SECTION
601001-05	PIPE UNDERDRAINS
601101-02	CONCRETE HEADWALL FOR PIPE UNDERDRAINS
602402-03	PRECAST MANHOLE TYPE A 5' (1.52m) DIAMETER
604001-05	FRAME AND LIDS TYPE 1
606001-09	CONCRETE CURB TYPE B AND COMBINATION CONCRETE CURB AND GUTTER
610001-09	SHOULDER INLET WITH CURB
630001-13	STEEL PLATE BEAM GUARDRAIL
630116	BACKSIDE PROTECTION OF GUARDRAIL
630301-09	SHOULDER WIDENING FOR TYPE 1 (SPECIAL) GUARDRAIL TERMINALS
631011-10	TRAFFIC BARRIER TERMINAL TYPE 2
631031-18	TRAFFIC BARRIER TERMINAL TYPE 6
637006-05	CONCRETE BARRIER DOUBLE FACE 44" HEIGHT
642001-03	SHOULDER RUMBLE STRIPS 16"
701006-05	OFF-RD OPERATIONS 2L 2W 15' TO 24" FROM PAVEMENT EDGE
701106-02	OFF-RD OPERATIONS, MULTILANE, MORE THAN 15' AWAY
701201-05	LANE CLOSURE, 2L 2W, DAY ONLY 45MPH OR MORE
701301-04	LANE CLOSURE, 2L 2W, SHORT TIME OPERATIONS
701311-03	LANE CLOSURE, 2L 2W, MOVING OPERATIONS DAY ONLY
701400-12	APPROACH TO LANE CLOSURE FREEWAY EXPRESSWAY
701401-13	LANE CLOSURE FREEWAY EXPRESSWAY
701411-09	LANE CLOSURE MULTILANE ENTRANCE OR EXIT RAMP 45MPH OR MORE
701428-01	TRAFFIC CONTROL SETUP REMOVAL FREEWAY EXPRESSWAY
701446-11	TWO LANE CLOSURE FREEWAY EXPRESSWAY
701501-06	URBAN LANE CLOSURE, 2L 2W, UNDIVIDED
701701-10	URBAN LANE CLOSURE MULTILANE INTERSECTION
701801-06	SIDEWALK, CORNER OR CROSSWALK CLOSURE
701901-11	TRAFFIC CONTROL DEVICES
704001-08	TEMPORARY CONCRETE BARRIER
725001-01	OBJECT AND TERMINAL MARKERS
780001-05	TYPICAL PAVEMENT MARKINGS
781001-04	TYPICAL APPLICATIONS RAISED REFLECTIVE PAVEMENT MARKERS
782006-01	GUARDRAIL AND BARRIER WALL REFLECTOR MOUNTING DETAILS

MODEL: D162W20-sht-Index_Stats_Notes 01 [Sheet]
FILE NAME: c:\pwworking\pfmeral\pwprod\lnguyen2\dms56232\D162W20-sht-gennote.dgn

MILLENNIA PROFESSIONAL SERVICES
www.millennia.pro

USER NAME = lnguyen	DESIGNED - TN	REVISED -	
	DRAWN - JP/SKP	REVISED -	
	CHECKED - TW	REVISED -	
PLOT DATE = 5/5/2026	DATE - 05/06/2026	REVISED -	

STATE OF ILLINOIS
DEPARTMENT OF TRANSPORTATION

OAK PARK AVENUE OVER I-80
INDEX OF SHEETS, HIGHWAY STANDARDS, AND COMMITMENTS

SCALE: | SHEET 1 OF 2 SHEETS | STA. | TO STA.

F.A.I RTE.	SECTION	COUNTY	TOTAL SHEETS	SHEET NO.
80	FAI 80 23 Bridge Replacement 2	COOK	158	2
		CONTRACT NO. 62W20		
	ILLINOIS FED. AID PROJECT			

REV-SEP

GENERAL NOTES

1. THE LOCATION AND ELEVATIONS OF THE UNDERGROUND UTILITIES AS SHOWN ON THE PLANS ARE NOT TO BE TAKEN AS EXACT. THE CONTRACTOR SHALL USE SPECIAL CARE WHEN CONDUCTING CONSTRUCTION OPERATIONS NEAR THEM TO PREVENT DAMAGE.

2. IT SHALL BE THE CONTRACTOR'S RESPONSIBILITY TO VERIFY ALL DIMENSIONS AND CONDITIONS EXISTING IN THE FIELD WHICH MAY AFFECT THE DETAILS AND CLEARANCES OF ALL COMPONENT PARTS PRIOR TO THE CONSTRUCTION, FABRICATION AND ORDERING OF MATERIALS. THE CONTRACTOR SHALL BE RESPONSIBLE FOR THE PROPER FITTING AND ASSEMBLY OF ALL PARTS OF THIS WORK AND SHALL INDICATE ON ALL SHOP DRAWINGS WHICH DIMENSIONS WERE OBTAINED BY ACTUAL FIELD MEASUREMENTS.

3. IT SHALL BE THE CONTRACTOR'S RESPONSIBILITY TO ASCERTAIN WHETHER ANY PERMITS, SPECIAL INSPECTIONS, ETC. ARE REQUIRED IN RESPECT TO THE CONSTRUCTION OPERATIONS AND WORK UNDER THIS CONTACT. IT IS SOLELY HIS/HER DUTY TO PROVIDE FOR SUCH REQUIREMENTS AND TO MAKE PAYMENTS FOR THEM.

4. PRIOR TO INITIATING ANY REMOVAL OPERATION THE CONTRACTOR SHALL SAW-CUT EXISTING CONCRETE AND BITUMINOUS SURFACES WHERE REMOVAL ABUTS EXISTING TO REMAIN. THE CONTRACTOR SHALL RESTORE OR REPLACE ANY AND ALL CONDITIONS ABUTTING THE WORK AREA DAMAGED BY HIS/HER OPERATIONS AT NO ADDITIONAL COST AS DIRECTED BY THE COMMISSIONER.

5. THE LOCATION AND ELEVATIONS OF THE UNDERGROUND UTILITIES AS SHOWN ON THE PLANS ARE NOT TO BE TAKEN AS EXACT. THE CONTRACTOR SHALL USE SPECIAL CARE WHEN CONDUCTING CONSTRUCTION OPERATIONS NEAR THEM TO PREVENT DAMAGE.

6. ALL CONSTRUCTION MATERIALS WITHIN THE CITY RIGHT-OF-WAY MUST BE IDOT CERTIFIED. DOCUMENTATION OF MATERIAL CERTIFICATION SHALL BE SUBMITTED PRIOR TO ENGINEER APPROVAL. ALL CONSTRUCTION MATERIAL NEEDING INSPECTION SHALL BE DONE ACCORDING TO THE LATEST IDOT PROJECT AND PROCEDURES GUIDE.

7. THE CONTRACTOR SHALL PROVIDE THE ENGINEER A LIST OF MATERIALS USED AND IDENTIFY THEIR ASSOCIATED IDOT CERTIFICATION, SHALL PROVIDE THE ENGINEER WITH A COPY OF ALL MATERIAL TESTING COMPANY RESULTS, SHALL SIGN AND PROVIDE THE ENGINEER ON A WEEKLY BASIS WEEKLY FIELD REPORTS UTILIZING THE APPROPRIATE IDOT FORM, AND SHALL SUBMIT TO THE ENGINEER A CERTIFICATION LETTER THAT CERTIFIES COMPLIANCE WITH THE PLANS AND SPECIFICATIONS.

8. THE CONTRACTOR SHALL NOTIFY THE RESPECTIVE UTILITIES TO MAKE THE NECESSARY ADJUSTMENTS PRIOR TO THE CONSTRUCTION.

9. THE CONTRACTOR MUST TAKE ALL NECESSARY SAFETY PRECAUTIONS TO PROTECT ABUTTING PROPERTY, UTILITIES, PEDESTRIANS, AND VEHICULAR TRAFFIC.

10. THE CONTRACTOR SHALL NOT BE ALLOWED TO SET UP A YARD OR FIELD OFFICE ON IDOT PROPERTY WITHOUT WRITTEN CONSENT FROM IDOT AND THE ROADSIDE DEVELOPMENT UNIT.

11. EXISTING VEGETATED AREAS (TREES, SHRUBS, VEGETATIVE BUFFERS, TURF AREAS, ETC.) WHERE DISTURBANCE IS NOT OCCURRING (INCLUDING AREAS OUTSIDE THE PROJECT LIMITS) SHALL NOT BE DISTURBED TO ENSURE THAT EXISTING VEGETATION IS PRESERVED HEALTHY TO MINIMIZE SOIL EROSION AND TO ELIMINATE SOIL COMPACTION. NO MATERIALS ARE TO BE STORED OR VEHICLES DRIVEN OR PARKED WITHIN THESE UNDISTURBED AREAS AT ANY TIME.

12. BEFORE BEGINNING ANY WORK, THE CONTRACTOR SHALL RETAIN AND RECORD FOR FUTURE REFERENCE, ALL EXISTING PAVEMENT MARKING LINES (AND RAISED REFLECTIVE PAVEMENT MARKERS) IN ORDER THAT THESE LOCATIONS CAN BE RE-ESTABLISHED FOR STRIPING. EXACT LOCATIONS OF ALL PAVEMENT MARKINGS SHALL BE AS DIRECTED BY THE ENGINEER.

13. WHEN, DURING THE CONSTRUCTION OPERATIONS, ANY LOOSE MATERIAL IS DEPOSITED IN THE FLOW LINE OF THE GUTTERS OR THE DRAINAGE STRUCTURES SO THAT THE NATURAL FLOW OF WATER IS OBSTRUCTED, IT SHALL BE REMOVED AT THE CLOSE OF EACH WORKING DAY. AT THE CONCLUSION OF CONSTRUCTION OPERATIONS, ALL DRAINAGE STRUCTURES SHALL BE FREE OF ALL DIRT AND DEBRIS. THE WORK SPECIFIED ABOVE SHALL BE CONSIDERED AS INCIDENTAL TO THE CONTRACT.

14. EXISTING HYDRANTS TO REMAIN, BE PROTECTED AND VISIBLE DURING CONSTRUCTION.

15. THE CONTRACTOR SHALL REQUEST AND GAIN APPROVAL FROM THE ILLINOIS DEPARTMENT OF TRANSPORTATION'S EXPRESSWAY TRAFFIC OPERATIONS ENGINEER AT WWW.IDOTLCS.COM TWENTY-FOUR (24) HOURS IN ADVANCE OF ALL DAILY LANE, RAMP, AND SHOULDER CLOSURES AND 7 DAYS IN ADVANCE OF ALL PERMANENT AND WEEKEND CLOSURES ON ALL FREEWAYS AND/OR EXPRESSWAYS IN DISTRICT ONE. THIS ADVANCE NOTIFICATION IS CALCULATED BASED ON WORKWEEK OF MONDAY THROUGH FRIDAY AND SHALL NOT INCLUDE WEEKEND OR HOLIDAYS.

16. ANY UTILITY THAT IS DAMAGED DURING CONSTRUCTION WILL BE REPAIRED OR REPLACED BY THE CONTRACTOR AT HIS/HER OWN EXPENSE.

17. THE CONTRACTOR IS RESPONSIBLE FOR THE PROTECTION OF FIELD TILES, UNDERGROUND AND SURFACE UTILITIES AS OUTLINED IN ARTICLE 107.37 OF THE STANDARD SPECIFICATIONS, EVEN THOUGH THEY MAY NOT BE SHOWN IN THE PLANS. ANY FIELD TILE THAT IS DAMAGED DURING CONSTRUCTION SHALL BE REPAIRED IN ACCORDANCE WITH SECTION 611 OF THE STANDARD SPECIFICATIONS FOR ROAD AND BRIDGE CONSTRUCTION. ANY UTILITY PROPERTY DAMAGED DURING CONSTRUCTION SHALL BE REPAIRED OR REPLACED TO THE SATISFACTION OF THE ENGINEER.

18. THE CONTRACTOR SHALL TAKE EXTRA CARE IN GRADING AND EXCAVATING NEAR TREES WHICH ARE NOT MARKED FOR REMOVAL SO AS NOT TO CAUSE INJURY TO THE ROOT SYSTEM OR TRUNKS. ANY DAMAGE DONE TO EXISTING ITEMS BY THE CONTRACTOR SHALL BE REPAIRED OR REPLACED BY THE CONTRACTOR AT THE CONTRACTOR'S OWN EXPENSE. SEVERITY OF THE DAMAGE WILL BE DETERMINED BY THE ENGINEER.

19. THE METROPOLITAN WATER RECLAMATION DISTRICT OF GREATER CHICAGO (MWRD) HAS REQUESTED THAT DURING CONSTRUCTION EXTRA CAUTION BE TAKEN TO PROTECT THE SAFETY AND INTEGRITY OF ITS EXISTING UNDERGROUND FACILITIES LOCATED ALONG THE EAST ROW OF OAK PARK AVENUE. IN ORDER TO MAINTAIN SERVICE, NO ACCESS HATCHES OR COVERS LOCATED ON MWRD STRUCTURES AND MANHOLES WITHIN THE PROJECT AREA SHALL BE BURIED OR COVERED, AND NO DEBRIS SHALL ENTER MWRD STRUCTURES, SEWERS, OR FACILITIES. MWRD PERSONNEL SHALL HAVE 24-HOUR-A-DAY UNRESTRICTED ACCESS TO ALL MWRD FACILITIES. ALL MWRD MANHOLES SHALL BE LOCATED, PROTECTED AND/OR ADJUSTED TO GRADE, IF NECESSARY. QUESTIONS REGARDING ACCESS TO MWRD FACILITIES OR FIELD LOCATIONS SHOULD BE DIRECTED TO MR. DAVID TANG, ASSOCIATE CIVIL ENGINEER, AT 773-256-3663. AUTHORIZATION REGARDING LOCATION, PROTECTION AND/OR ADJUSTMENTS TO MWRD MANHOLES MAY BE OBTAINED BY CONTACTING MR. ED STAUDACHER, MANAGING CIVIL ENGINEER, AT 708-588-4319.

20. ANY AGGREGATE SUBGRADE IMPROVEMENT CONTAMINATED AND/OR DAMAGED BY THE CONTRACTOR'S VEHICLES AND/OR EQUIPMENT IS TO BE REMOVED AND REPLACED AS DIRECTED BY ENGINEER AT CONTRACTOR EXPENSE.

21. THE SUBGRADE STABILITY SHALL BE VERIFIED BY PROOF ROLLING WITH A FULLY LOADED TANDEM-AXLE TRUCK.

22. THE CONTRACTOR SHALL CONTACT THE DISTRICT ONE TRAFFIC CONTROL SUPERVISOR FOR ARTERIALS AT KALPANA.KANNAN-HOSADURGA@ILLINOIS.GOV AT LEAST 72 HOURS IN ADVANCE OF BEGINNING WORK.

23. THE CONTRACTOR SHALL CONTACT THE IDOT EXPRESSWAY TRAFFIC CONTROL SUPERVISOR DISTRICT ONE CARLOS MUNOZ AT CARLOS.MUNOZ@ILLINOIS.GOV A MINIMUM OF 72 HOURS IN ADVANCE OF BEGINNING WORK.

24. TWO WEEKS PRIOR TO PLACEMENT OF PERMANENT PAVEMENT MARKINGS, THE ENGINEER SHALL CONTACT PATRICE HARRIS, AREA TRAFFIC FIELD TECHNICIAN, AT PATRICE.HARRIS@ILLINOIS.GOV

25. ANY ISSUES OR WORK NEEDED WHEN CROSSING OR ADJACENT TO ANY COMED ASSETS PLEASE CONTACT ERIKA IRBY VIA EMAIL AT ERIKA.IRBY@EXELONCORP.COM AT LEAST SIX WEEKS PRIOR TO CONSTRUCTION START.

26. TO CONSERVE THE NORTHERN LONG EARED BAT (NLEB) AND TRICOLORED BAT (TCB), NO TREE REMOVAL SHALL OCCUR BETWEEN APRIL 1 AND OCTOBER 31 OF ANY GIVEN YEAR

27. THE AGGREGATE GRADATION FOR THE LOWER 9 INCHES OF AGGREGATE SUBGRADE IMPROVEMENT 12" SHALL BE CS 1 OR RR 1.

28. PIPE UNDERDRAINS SHALL BE INSTALLED ACCORDING TO SECTION 601 OF THE STANDARD SPECIFICATIONS AND STANDARD 606001-05. TOP OF PIPE UNDERDRAINS SHALL BE MINIMUM OF 6" BELOW THE AGGREGATE SUBGRADE LAYER. THE COST OF MAKING UNDERDRAINS CONNECTIONS TO THE DRAINAGE STRUCTURES SHALL BE INCLUDED IN THE COST OF PIPE UNDERDRAINS.

29. GEOTECHNICAL FABRIC FOR GROUND STABALIZATION AND/OR AGGREGATE SUBGRADE IMPROVEMENT (CU YD) HAS BEEN PROVIDED FOR USE AT THE LOCATIONS INDICATED FOR SOILS THAT TEND TO BE UNSTABLE AND/OR UNSUITABLE. THE ACTUAL NEED FOR REMOVAL AND REPLACEMENT WITH ABOVE ITEM WILL BE DETERMINED IN THE FIELD AT THE TIME OF CONSTRUCTION BY THE GEOTECHNICAL ENGINEER. ALL POTENTIALLY UNSTABLE SOILS SHALL BE TESTED WITH A STATIC OR DYNAMIC CONE PENETROMETER AND TREATED IN ACCORDANCE WITH ARTICLE 301.04 OF THE STANDARD SPECIFICATIONS AND IDOT SUBGRADE STABILITY MANUAL. IF UNSTABLE AND/OR UNSUITABLE SOILS ARE NOT ENCOUNTERED, THEN THE QUANTITY SHALL BE DEDUCTED AND NO ADDITIONAL COMPENSATION WILL BE DUE TO THE CONTRACTOR.

    GEOTECHNICAL FABRIC FOR GROUND STABILIZATION SHALL BE WOVEN.

30. BACKFILLING STORM SEWER CONSTRUCTED UNDER THE ROADWAY SPECIFIED UNDER ART. 550.07(b,c) OF THE SSRBC WILL NOT BE ALLOWED.

31. THIS PROJECT REQUIRES A US ARMY CORPS OF ENGINEERS (USACE) 404 PERMIT THAT WILL BE SECURED BY THE DEPARTMENT. AS A CONDITION OF THIS PERMIT, THE CONTRACTOR WILL NEED TO SUBMIT AN IN-STREAM WORK PLAN TO THE DEPARTMENT FOR APPROVAL. GUIDELINES ON ACCEPTABLE IN-STREAM WORK TECHNIQUES CAN BE FOUND ON THE USACE WEBSITE. THE USACE DEFINES AND DETERMINES IN-STREAM WORK. THE COST OF ALL MATERIALS AND LABOR NECESSARY TO COMPLY WITH THE ABOVE PROVISIONS TO PREPARE AND IMPLEMENT AN IN-STREAM WORK PLAN WILL NOT BE PAID FOR SEPARATELY, BUT SHALL BE CONSIDERED AS INCLUDED IN THE UNIT BID PRICES OF THE CONTRACT AND NO ADDITIONAL COMPENSATION WILL BE ALLOWED.

32. THE DEPARTMENT HAS NOT OBTAINED ANY PERMITS FOR OFFSITE BORROW, WASTE, USE (BWU) AREAS. PRIOR TO WORKING IN BWU AREAS, IF THE CONTRACTOR CHOOSES TO USE ACTIVITIES REQUIRING PERMITS IT IS THE CONTRACTOR'S RESPONSIBILITY TO SECURE THE PROPER PERMITS. IN ADDITION TO THE BORROW REVIEW (BDE 2289) AND USE/WASTE REVIEW (BDE 2290) SUBMITTALS, THE CONTRACTOR SHALL SUBMIT AN EROSION AND SEDIMENT CONTROL (ESC) PLAN FOR EVERY BWU SITE TO THE DEPARTMENT FOR ACCEPTANCE. GUIDELINES FOR ACCEPTABLE BWU PRACTICES CAN BE FOUND IN SECTION I1.G.1 AND 2 OF THE SWPPP. THE COST OF ALL MATERIALS AND LABOR NECESSARY TO COMPLY WITH THE ABOVE PROVISIONS TO PREPARE AND IMPLEMENT ESC PLANS WILL BE PAID FOR SEPARATELY, BUT SHALL BE CONSIDERED AS INCLUDED IN THE UNIT BID PRICES OF THE CONTRACT AND NO ADDITIONAL COMPENSATION WILL BE ALLOWED.

33. THE CONTRACTOR SHALL CONTACT THE VILLAGE ENGINEER, KYLE VESTER, KVESTER@TINLEYPARK.ORG, 708-444-5540 BEFORE RELOCATING ANY EXISTING FIRE HYDRANT.

MODEL: D162W20-sht-gennote [Sheet]
FILE NAME: c:\pwworking\ptmeral\pwprod\nguyen2\dms56232\D162W20-sht-gennote.dgn

MILLENNIA PROFESSIONAL SERVICES www.millennia.pro

USER NAME = Inguyen	DESIGNED - TN	REVISED -	
	DRAWN - JP/SKP	REVISED -	
	CHECKED - TW	REVISED -	
PLOT DATE = 5/5/2026	DATE - 05/06/2026	REVISED -	

STATE OF ILLINOIS
DEPARTMENT OF TRANSPORTATION

OAK PARK AVENUE OVER I-80
GENERAL NOTES

SCALE: | SHEET 2 OF 2 SHEETS | STA. | TO STA.

F.A.I RTE.	SECTION	COUNTY	TOTAL SHEETS	SHEET NO.
80	FAI 80 23 Bridge Replacement 2	COOK	158	3
		CONTRACT NO. 62W20		
	ILLINOIS FED. AID PROJECT			

SUMMARY OF QUANTITIES

	PAYCODE	ITEM DESCRIPTION	UNIT	TOTAL QUANTITIES	CONSTRUCTION TYPE CODE ROADWAY URBAN 90% FED 10% STATE 0013	ROADWAY URBAN 100% STATE 0013	SAFETY URBAN 90% FED 10% STATE 0021	BRIDGE S.N.016-0927 90% FED 10% STATE 0013
	20100110	TREE REMOVAL (6 TO 15 UNITS DIAMETER)	UNIT	340	340			
	20100210	TREE REMOVAL (OVER 15 UNITS DIAMETER)	UNIT	78	78			
	20101000	TEMPORARY FENCE	FOOT	5000	5000			
	20200100	EARTH EXCAVATION	CU YD	100	100			
	20201200	REMOVAL AND DISPOSAL OF UNSUITABLE MATERIAL	CU YD	61	61			
	20400800	FURNISHED EXCAVATION	CU YD	1631	1631			
	20800150	TRENCH BACKFILL	CU YD	64	64			
	21001000	GEOTECHNICAL FABRIC FOR GROUND STABILIZATION	SQ YD	206	206			
	21101505	TOPSOIL EXCAVATION AND PLACEMENT	CU YD	1700	1700			
	21101615	TOPSOIL FURNISH AND PLACE, 4"	SQ YD	100	100			
	21400100	GRADING AND SHAPING DITCHES	FOOT	1080	1080			
	25000210	SEEDING, CLASS 2A	ACRE	3	3			
	25000310	SEEDING, CLASS 4	ACRE	1	1			
	25000400	NITROGEN FERTILIZER NUTRIENT	POUND	395	395			
	25000600	POTASSIUM FERTILIZER NUTRIENT	POUND	395	395			
	25100630	EROSION CONTROL BLANKET	SQ YD	16065	16065			

SUMMARY OF QUANTITIES

	PAYCODE	ITEM DESCRIPTION	UNIT	TOTAL QUANTITIES	CONSTRUCTION TYPE CODE: ROADWAY URBAN 90% FED 10% STATE 0013	ROADWAY URBAN 100% STATE 0013	SAFETY URBAN 90% FED 10% STATE 0021	BRIDGE S.N.016-0927 90% FED 10% STATE 0013
	25100900	TURF REINFORCEMENT MAT	SQ YD	5167	5167			
	28000250	TEMPORARY EROSION CONTROL SEEDING	POUND	449	449			
	28000305	TEMPORARY DITCH CHECKS	FOOT	120	120			
	28000400	PERIMETER EROSION BARRIER	FOOT	2350	2350			
	28000500	INLET AND PIPE PROTECTION	EACH	3	3			
	28000510	INLET FILTERS	EACH	13	13			
	28001100	TEMPORARY EROSION CONTROL BLANKET	SQ YD	21778	21778			
	28100105	STONE RIPRAP, CLASS A3	SQ YD	69	69			
*	30300001	AGGREGATE SUBGRADE IMPROVEMENT	CU YD	78	78			
*	30300112	AGGREGATE SUBGRADE IMPROVEMENT 12"	SQ YD	823	823			
	31101200	SUBBASE GRANULAR MATERIAL, TYPE B 4"	SQ YD	1499	1499			
	35101800	AGGREGATE BASE COURSE, TYPE B 6"	SQ YD	2638	2638			
	35300500	PORTLAND CEMENT CONCRETE BASE COURSE 10"	SQ YD	41	41			
	40600275	BITUMINOUS MATERIALS (PRIME COAT)	POUND	11494	11494			
	40600290	BITUMINOUS MATERIALS (TACK COAT)	POUND	33080	33080			
	40600370	LONGITUDINAL JOINT SEALANT	FOOT	7460	7460			

SUMMARY OF QUANTITIES

	PAYCODE	ITEM DESCRIPTION	UNIT	TOTAL QUANTITIES	CONSTRUCTION TYPE CODE: ROADWAY URBAN 90% FED 10% STATE 0013	ROADWAY URBAN 100% STATE 0013	SAFETY URBAN 90% FED 10% STATE 0021	BRIDGE S.N.016-0927 90% FED 10% STATE 0013
	40600982	HOT-MIX ASPHALT SURFACE REMOVAL - BUTT JOINT	SQ YD	784	784			
	40603200	POLYMERIZED HOT-MIX ASPHALT BINDER COURSE, IL-4.75, N50	TON	1995	1995			
	40603240	POLYMERIZED HOT-MIX ASPHALT BINDER COURSE, IL-19.0, N90	TON	13	13			
	40604060	HOT-MIX ASPHALT SURFACE COURSE, IL-9.5, MIX "D", N50	TON	444	444			
	40604062	HOT-MIX ASPHALT SURFACE COURSE, IL-9.5, MIX "D", N70	TON	3990	3990			
	40605026	POLYMERIZED HOT-MIX ASPHALT SURFACE COURSE, STONE MATRIX ASPHALT, 9.5, MIX "F", N80	TON	7	7			
	40701881	HOT-MIX ASPHALT PAVEMENT (FULL-DEPTH), 10"	SQ YD	724	724			
	42001300	PROTECTIVE COAT	SQ YD	1499	1499			
	42400200	PORTLAND CEMENT CONCRETE SIDEWALK 5 INCH	SQ FT	13489	13489			
	42400800	DETECTABLE WARNINGS	SQ FT	175	175			
	44000100	PAVEMENT REMOVAL	SQ YD	776	776			
	44000158	HOT-MIX ASPHALT SURFACE REMOVAL, 2 1/4"	SQ YD	47538	47538			
	44000500	COMBINATION CURB AND GUTTER REMOVAL	FOOT	203	203			
	44000600	SIDEWALK REMOVAL	SQ FT	480	480			
	44001980	CONCRETE BARRIER REMOVAL	FOOT	116			116	
	44004250	PAVED SHOULDER REMOVAL	SQ YD	255	255			

SUMMARY OF QUANTITIES

	PAYCODE	ITEM DESCRIPTION	UNIT	TOTAL QUANTITIES	CONSTRUCTION TYPE CODE: ROADWAY URBAN 90% FED 10% STATE 0013	ROADWAY URBAN 100% STATE 0013	SAFETY URBAN 90% FED 10% STATE 0021	BRIDGE S.N.016-0927 90% FED 10% STATE 0013
	44200557	CLASS A PATCHES, TYPE III, 10 INCH	SQ YD	17	17			
	44201299	DOWEL BARS 1 1/2"	EACH	12	12			
	44213000	PATCHING REINFORCEMENT	SQ YD	17	17			
	44213200	SAW CUTS	FOOT	64	64			
	44213204	TIE BARS 3/4"	EACH	18	18			
	48101500	AGGREGATE SHOULDERS, TYPE B 6"	SQ YD	397	397			
	50101500	REMOVAL OF EXISTING SUPERSTRUCTURES	EACH	1				1
	50102400	CONCRETE REMOVAL	CU YD	45.8				45.8
	50104650	SLOPE WALL REMOVAL	SQ YD	461				461
	50157300	PROTECTIVE SHIELD	SQ YD	659				659
	50200100	STRUCTURE EXCAVATION	CU YD	442.3				442.3
	50300225	CONCRETE STRUCTURES	CU YD	204.5				204.5
	50300255	CONCRETE SUPERSTRUCTURE	CU YD	395.8				395.8
	50300260	BRIDGE DECK GROOVING	SQ YD	1014				1014
	50300300	PROTECTIVE COAT	SQ YD	2014				2014
	50301350	CONCRETE SUPERSTRUCTURE (APPROACH SLAB)	CU YD	142.2				142.2

MODEL: D162W20-sht-SOQ-04 [Sheet]
FILE NAME: c:\pwworking\primera\pwprod\nguyen2\dms58232\D162W20-sht-SOQ.dgn

MILLENNIA PROFESSIONAL SERVICES www.millennia.pro

USER NAME = Nguyen	DESIGNED - TVN	REVISED -
	DRAWN - JP/SKP	REVISED -
	CHECKED - TW	REVISED -
PLOT DATE = 5/5/2026	DATE - 05/06/2026	REVISED -

STATE OF ILLINOIS
DEPARTMENT OF TRANSPORTATION

OAK PARK AVENUE OVER I-80
SUMMARY OF QUANTITIES

SCALE: | SHEET 4 OF 11 SHEETS | STA. | TO STA.

F.A.I RTE.	SECTION	COUNTY	TOTAL SHEETS	SHEET NO.
80	FAI 80 23 Bridge Replacement 2	COOK	158	7
		CONTRACT NO. 62W20		
	ILLINOIS FED. AID PROJECT			

REV-SEP

SUMMARY OF QUANTITIES

	PAYCODE	ITEM DESCRIPTION	UNIT	TOTAL QUANTITIES	CONSTRUCTION TYPE CODE: ROADWAY URBAN 90% FED 10% STATE 0013	ROADWAY URBAN 100% STATE 0013	SAFETY URBAN 90% FED 10% STATE 0021	BRIDGE S.N.016-0927 90% FED 10% STATE 0013
*	50500105	FURNISHING AND ERECTING STRUCTURAL STEEL	L SUM	1				1
*	50500505	STUD SHEAR CONNECTORS	EACH	8757				8757
	50800205	REINFORCEMENT BARS, EPOXY COATED	POUND	184630				184630
	50800530	MECHANICAL SPLICERS	EACH	6				6
*	50901735	BICYCLE RAILING, CURVED	FOOT	568				568
*	50901750	PARAPET RAILING	FOOT	560				560
	51100100	SLOPE WALL 4 INCH	SQ YD	645				645
*	51200958	FURNISHING METAL SHELL PILES 14" X 0.250"	FOOT	595				595
*	51202305	DRIVING PILES	FOOT	595				595
*	51203200	TEST PILE METAL SHELLS	EACH	5				5
*	51204650	PILE SHOES	EACH	24				24
*	51500100	NAME PLATES	EACH	1				1
	52100010	ELASTOMERIC BEARING ASSEMBLY, TYPE I	EACH	28				28
	52100520	ANCHOR BOLTS, 1"	EACH	70				70
*	52200010	TEMPORARY SHEET PILING	SQ FT	5134				5134
	53212754	STRUCTURAL REPAIR OF CONCRETE (DEPTH EQUAL TO OR LESS THAN 5 INCHES)	SQ FT	38				38

* SPECIALTY ITEM

MODEL: D162W20-sht-SOQ-05 [Sheet]
FILE NAME: c:\pwworking\primera\pwprod\nguyen2\dms58232\D162W20-sht-SOQ.dgn

MILLENNIA PROFESSIONAL SERVICES www.millennia.pro

USER NAME = Nguyen	DESIGNED - TVN	REVISED -	
	DRAWN - JP/SKP	REVISED -	
	CHECKED - TW	REVISED -	
PLOT DATE = 5/5/2026	DATE - 05/06/2026	REVISED -	

STATE OF ILLINOIS
DEPARTMENT OF TRANSPORTATION

OAK PARK AVENUE OVER I-80
SUMMARY OF QUANTITIES

SCALE: | SHEET 5 OF 11 SHEETS | STA. | TO STA.

F.A.I RTE.	SECTION	COUNTY	TOTAL SHEETS	SHEET NO.
80	FAI 80 23 Bridge Replacement 2	COOK	158	8
		CONTRACT NO. 62W20		
	ILLINOIS FED. AID PROJECT			

REV-SEP

SUMMARY OF QUANTITIES

	PAYCODE	ITEM DESCRIPTION	UNIT	TOTAL QUANTITIES	CONSTRUCTION TYPE CODE: ROADWAY URBAN 90% FED 10% STATE 0013	ROADWAY URBAN 100% STATE 0013	SAFETY URBAN 90% FED 10% STATE 0021	BRIDGE S.N.016-0927 90% FED 10% STATE 0013
	54213666	PRECAST REINFORCED CONCRETE FLARED END SECTIONS 21"	EACH	1	1			
	54213669	PRECAST REINFORCED CONCRETE FLARED END SECTIONS 24"	EACH	1	1			
	550A0340	STORM SEWERS, CLASS A, TYPE 2 12"	FOOT	12	12			
	550A0400	STORM SEWERS, CLASS A, TYPE 2 21"	FOOT	133	133			
	550A0410	STORM SEWERS, CLASS A, TYPE 2 24"	FOOT	90	90			
*	56400400	FIRE HYDRANTS TO BE RELOCATED	EACH	1	1			
	58600101	GRANULAR BACKFILL FOR STRUCTURES	CU YD	192				192
	58700300	CONCRETE SEALER	SQ FT	830				830
	59000200	EPOXY CRACK INJECTION	FOOT	6				6
	59100100	GEOCOMPOSITE WALL DRAIN	SQ YD	120				120
	60100060	CONCRETE HEADWALLS FOR PIPE DRAINS	EACH	2	2			
	60100945	PIPE DRAINS 12"	FOOT	380	380			
	60108204	PIPE UNDERDRAINS, TYPE 2, 4"	FOOT	140	140			
	60146304	PIPE UNDERDRAINS FOR STRUCTURES 4"	FOOT	152				152
	60221100	MANHOLES, TYPE A, 5'-DIAMETER, TYPE 1 FRAME, CLOSED LID	EACH	1	1			
	60500060	REMOVING INLETS	EACH	4	4			

MODEL: D162W20-sht-SOQ-06 [Sheet]
FILE NAME: c:\ww\working\primera\pwprod\nguyen2\dms58232\D162W20-sht-SOQ.dgn

MILLENNIA PROFESSIONAL SERVICES www.millennia.pro

USER NAME = Nguyen	DESIGNED - TVN	REVISED -
	DRAWN - JP/SKP	REVISED -
	CHECKED - TW	REVISED -
PLOT DATE = 5/5/2026	DATE - 05/06/2026	REVISED -

STATE OF ILLINOIS
DEPARTMENT OF TRANSPORTATION

OAK PARK AVENUE OVER I-80
SUMMARY OF QUANTITIES

SCALE: | SHEET 6 OF 11 SHEETS | STA. | TO STA.

F.A.I RTE.	SECTION	COUNTY	TOTAL SHEETS	SHEET NO.
80	FAI 80 23 Bridge Replacement 2	COOK	158	9
		CONTRACT NO. 62W20		
	ILLINOIS FED. AID PROJECT			

REV-SEP

SUMMARY OF QUANTITIES

	PAYCODE	ITEM DESCRIPTION	UNIT	TOTAL QUANTITIES	CONSTRUCTION TYPE CODE: ROADWAY URBAN 90% FED 10% STATE 0013	ROADWAY URBAN 100% STATE 0013	SAFETY URBAN 90% FED 10% STATE 0021	BRIDGE S.N.016-0927 90% FED 10% STATE 0013
	60603800	COMBINATION CONCRETE CURB AND GUTTER, TYPE B-6.12	FOOT	346	346			
*	63000001	STEEL PLATE BEAM GUARDRAIL, TYPE A, 6 FOOT POSTS	FOOT	516			516	
*	63000035	BACK SIDE PROTECTION OF GUARDRAIL	FOOT	283			283	
*	63100045	TRAFFIC BARRIER TERMINAL, TYPE 2	EACH	1			1	
*	63100085	TRAFFIC BARRIER TERMINAL, TYPE 6	EACH	4			4	
*	63100167	TRAFFIC BARRIER TERMINAL, TYPE 1 (SPECIAL) TANGENT	EACH	5			5	
	63200310	GUARDRAIL REMOVAL	FOOT	1236			1236	
*	63700280	CONCRETE BARRIER, DOUBLE FACE, 44 INCH HEIGHT	FOOT	70			70	
*	63700805	CONCRETE BARRIER TRANSITION	FOOT	30			30	
*	63700900	CONCRETE BARRIER BASE	FOOT	100			100	
	64200116	SHOULDER RUMBLE STRIPS, 16 INCH	FOOT	1100			1100	
*	66400105	CHAIN LINK FENCE, 4'	FOOT	1679			1679	
*	66900200	NON-SPECIAL WASTE DISPOSAL	CU YD	2410	2410			
*	66900530	SOIL DISPOSAL ANALYSIS	EACH	4	4			
*	66901001	REGULATED SUBSTANCES PRE-CONSTRUCTION PLAN	L SUM	1	1			
*	66901003	REGULATED SUBSTANCES FINAL CONSTRUCTION REPORT	L SUM	1	1			

* SPECIALTY ITEM

MODEL: D162W20-sht-SOQ-07 [Sheet]
FILE NAME: c:\wworking\primera\pwprod\nguyen2\dms58232\D162W20-sht-SOQ.dgn

MILLENNIA PROFESSIONAL SERVICES www.millennia.pro

USER NAME = Nguyen	DESIGNED - TVN	REVISED -	
	DRAWN - JP/SKP	REVISED -	
	CHECKED - TW	REVISED -	
PLOT DATE = 5/5/2026	DATE - 05/06/2026	REVISED -	

STATE OF ILLINOIS
DEPARTMENT OF TRANSPORTATION

OAK PARK AVENUE OVER I-80
SUMMARY OF QUANTITIES

SCALE: | SHEET 7 OF 11 SHEETS | STA. | TO STA.

F.A.I RTE.	SECTION	COUNTY	TOTAL SHEETS	SHEET NO.
80	FAI 80 23 Bridge Replacement 2	COOK	158	10
		CONTRACT NO. 62W20		
	ILLINOIS FED. AID PROJECT			

REV-SEP

SUMMARY OF QUANTITIES

	PAYCODE	ITEM DESCRIPTION	UNIT	TOTAL QUANTITIES	CONSTRUCTION TYPE CODE: ROADWAY URBAN 90% FED 10% STATE 0013	ROADWAY URBAN 100% STATE 0013	SAFETY URBAN 90% FED 10% STATE 0021	BRIDGE S.N.016-0927 90% FED 10% STATE 0013
*	66901006	REGULATED SUBSTANCES MONITORING	CAL DA	18	18			
	67100100	MOBILIZATION	L SUM	1			1	
	70107025	CHANGEABLE MESSAGE SIGN	CAL DA	28			28	
	70300150	SHORT TERM PAVEMENT MARKING REMOVAL	SQ FT	5142			5142	
	70307120	TEMPORARY PAVEMENT MARKING - LINE 4" - TYPE IV TAPE	FOOT	14186			14186	
	70307130	TEMPORARY PAVEMENT MARKING - LINE 6" - TYPE IV TAPE	FOOT	281			281	
	70307140	TEMPORARY PAVEMENT MARKING - LINE 8" - TYPE IV TAPE	FOOT	330			330	
	70307160	TEMPORARY PAVEMENT MARKING - LINE 12"- TYPE IV TAPE	FOOT	102			102	
	70400100	TEMPORARY CONCRETE BARRIER	FOOT	883			883	
	70400125	PINNING TEMPORARY CONCRETE BARRIER	EACH	424			424	
	70400200	RELOCATE TEMPORARY CONCRETE BARRIER	FOOT	647			647	
	70600260	IMPACT ATTENUATORS, TEMPORARY (FULLY REDIRECTIVE, NARROW), TEST LEVEL 3	EACH	2			2	
	70600332	IMPACT ATTENUATORS, RELOCATE (FULLY REDIRECTIVE, NARROW), TEST LEVEL 3	EACH	2			2	
*	72400500	RELOCATE SIGN PANEL ASSEMBLY - TYPE A	EACH	11			11	
*	72501000	TERMINAL MARKER - DIRECT APPLIED	EACH	4			4	
*	78009000	MODIFIED URETHANE PAVEMENT MARKING - LETTERS AND SYMBOLS	SQ FT	1094			1094	

* SPECIALTY ITEM

SUMMARY OF QUANTITIES

	PAYCODE	ITEM DESCRIPTION	UNIT	TOTAL QUANTITIES	CONSTRUCTION TYPE CODE: ROADWAY URBAN 90% FED 10% STATE 0013	ROADWAY URBAN 100% STATE 0013	SAFETY URBAN 90% FED 10% STATE 0021	BRIDGE S.N.016-0927 90% FED 10% STATE 0013
*	78009004	MODIFIED URETHANE PAVEMENT MARKING - LINE 4"	FOOT	56904			56904	
*	78009005	MODIFIED URETHANE PAVEMENT MARKING - LINE 5"	FOOT	972			972	
*	78009006	MODIFIED URETHANE PAVEMENT MARKING - LINE 6"	FOOT	3840			3840	
*	78009008	MODIFIED URETHANE PAVEMENT MARKING - LINE 8"	FOOT	780			780	
*	78009012	MODIFIED URETHANE PAVEMENT MARKING - LINE 12"	FOOT	1351			1351	
*	78009024	MODIFIED URETHANE PAVEMENT MARKING - LINE 24"	FOOT	252			252	
*	78011000	GROOVING FOR RECESSED PAVEMENT MARKING, LETTERS AND SYMBOLS	SQ FT	1094			1094	
*	78011025	GROOVING FOR RECESSED PAVEMENT MARKING 5"	FOOT	42718			42718	
*	78011025	GROOVING FOR RECESSED PAVEMENT MARKING 6"	FOOT	972			972	
*	78011035	GROOVING FOR RECESSED PAVEMENT MARKING 7"	FOOT	3559			3559	
*	78011045	GROOVING FOR RECESSED PAVEMENT MARKING 9"	FOOT	450			450	
*	78011065	GROOVING FOR RECESSED PAVEMENT MARKING 13"	FOOT	1249			1249	
*	78011125	GROOVING FOR RECESSED PAVEMENT MARKING 25"	FOOT	252			252	
*	78100100	RAISED REFLECTIVE PAVEMENT MARKER	EACH	632			632	
*	78200005	GUARDRAIL REFLECTORS, TYPE A	EACH	18			18	
*	78200010	BARRIER WALL REFLECTORS, TYPE B	EACH	5			5	

* SPECIALTY ITEM

SUMMARY OF QUANTITIES

	PAYCODE	ITEM DESCRIPTION	UNIT	TOTAL QUANTITIES	CONSTRUCTION TYPE CODE: ROADWAY URBAN 90% FED 10% STATE 0013	ROADWAY URBAN 100% STATE 0013	SAFETY URBAN 90% FED 10% STATE 0021	BRIDGE S.N.016-0927 90% FED 10% STATE 0013
	78300200	RAISED REFLECTIVE PAVEMENT MARKER REMOVAL	EACH	632			632	
	78300202	PAVEMENT MARKING REMOVAL - WATER BLASTING	SQ FT	5142			5142	
*	81028770	UNDERGROUND CONDUIT, COILABLE NONMETALLIC CONDUIT, 3" DIA.	FOOT	2938	2938			
	X1200234	SHOULDER INLET WITH CURB	EACH	4	4			
*	X4201410	BRIDGE APPROACH PAVEMENT CONNECTOR (SPECIAL)	SQ YD	167	167			
	X5017309	PROTECTIVE SHIELD REMOVAL	L SUM	1				1
	X5021512	COFFERDAM (TYPE 1) (IN-STREAM/WETLAND WORK)	EACH	1			1	
*	X5080530	BAR TERMINATORS	EACH	288				288
	X5230176	DRAINAGE SCUPPERS, DS-12	EACH	4				4
	X5510012	PROPOSED STORM SEWER CONNECTION TO EXISTING STORM SEWER	EACH	1	1			
	X5537800	STORM SEWERS TO BE CLEANED 12"	FOOT	12		12		
	X5538000	STORM SEWERS TO BE CLEANED 18"	FOOT	785		785		
	X5538100	STORM SEWERS TO BE CLEANED 21"	FOOT	99		99		
	X5538200	STORM SEWERS TO BE CLEANED 24"	FOOT	269		269		
	X6010003	PIPE DRAIN REMOVAL	FOOT	380	380			
	X6026050	SANITARY MANHOLES TO BE ADJUSTED	EACH	2	2			

* SPECIALTY ITEM

MODEL: D162W20-sht-SOQ-10 [Sheet]
FILE NAME: c:\pwworking\primera\pwprod\nguyen2\dms58232\D162W20-sht-SOQ.dgn

MILLENNIA PROFESSIONAL SERVICES www.millennia.pro

USER NAME = Nguyen	DESIGNED - TVN	REVISED -	
	DRAWN - JP/SKP	REVISED -	
	CHECKED - TW	REVISED -	
PLOT DATE = 5/5/2026	DATE - 05/06/2026	REVISED -	

STATE OF ILLINOIS
DEPARTMENT OF TRANSPORTATION

OAK PARK AVENUE OVER I-80
SUMMARY OF QUANTITIES

SCALE: | SHEET 10 OF 11 SHEETS | STA. | TO STA.

F.A.I RTE.	SECTION	COUNTY	TOTAL SHEETS	SHEET NO.
80	FAI 80 23 Bridge Replacement 2	COOK	158	13
		CONTRACT NO. 62W20		
	ILLINOIS FED. AID PROJECT			

REV-SEP

SUMMARY OF QUANTITIES

	PAYCODE	ITEM DESCRIPTION	UNIT	TOTAL QUANTITIES	CONSTRUCTION TYPE CODE: ROADWAY URBAN 90% FED 10% STATE 0013	ROADWAY URBAN 100% STATE 0013	SAFETY URBAN 90% FED 10% STATE 0021	BRIDGE S.N.016-0927 90% FED 10% STATE 0013
	X6026051	SANITARY MANHOLES TO BE RECONSTRUCTED	EACH	2	2			
	X6420100	SHOULDER RUMBLE STRIP REMOVAL	SQ YD	148	148			
	X6640300	CHAIN LINK FENCE REMOVAL	FOOT	160			160	
*	X6700407	ENGINEER'S FIELD OFFICE, TYPE A (D1)	CAL MO	18	18			
	X7010216	TRAFFIC CONTROL AND PROTECTION, (SPECIAL)	L SUM	1			1	
	X7010410	SPEED DISPLAY TRAILER	CAL MO	18			18	
	X7011015	TRAFFIC CONTROL AND PROTECTION (EXPRESSWAYS)	L SUM	1			1	
	X7013820	TRAFFIC CONTROL SURVEILLANCE, EXPRESSWAYS	CAL DA	215			215	
	X7200061	TEMPORARY INFORMATION SIGNING	SQ FT	103			103	
	X7802002	UNDERDRAIN HEADWALL MARKER	EACH	4	4			
	X8900104	TEMPORARY TRAFFIC SIGNAL TIMING	EACH	3			3	
*	Z0004552	APPROACH SLAB REMOVAL	SQ YD	195	195			
	Z0013798	CONSTRUCTION LAYOUT	L SUM	1	1			
	Z0018500	DRAINAGE STRUCTURES TO BE CLEANED	EACH	13		13		
*	X6026635	UTILITY VAULTS	EACH	3	3			
*	X6020052	JUNCTION BOXES	EACH	3	3			
Ø	Z0076600	TRAINEES	HOUR	500	500			
Ø	Z0076604	TRAINEES - TRAINING PROGRAM GRADUATE	HOUR	500	500			

MODEL: D162W20-sht-SOQ-11 [Sheet]
FILE NAME: c:\pwworking\primera\pwprod\nguyen2\dms58232\D162W20-sht-SOQ.dgn

MILLENNIA PROFESSIONAL SERVICES www.millennia.pro

USER NAME = Nguyen | DESIGNED - TVN | REVISED -
DRAWN - JP/SKP | REVISED -
CHECKED - TW | REVISED -
PLOT DATE = 5/5/2026 | DATE - 05/06/2026 | REVISED -

STATE OF ILLINOIS
DEPARTMENT OF TRANSPORTATION

OAK PARK AVENUE OVER I-80
SUMMARY OF QUANTITIES

SCALE: | SHEET 11 OF 11 SHEETS | STA. | TO STA.

F.A.I RTE.	SECTION	COUNTY	TOTAL SHEETS	SHEET NO.
80	FAI 80 23 Bridge Replacement 2	COOK	158	14
		CONTRACT NO. 62W20		
	ILLINOIS FED. AID PROJECT			

REV-SEP

SUMMARY OF QUANTITIES
(LIGHTING PLAN QUANTITIES)

	PAYCODE	ITEM DESCRIPTION	UNIT	TOTAL QUANTITIES	CONSTRUCTION TYPE CODE: ROADWAY RURAL 90% FED 10% STATE 0004	ROADWAY RURAL 100% STATE 0004	SAFETY URBAN 90% FED 10% STATE 0021	BRIDGE S.N.016-0927 90% FED 10% STATE 0013
	81100320	CONDUIT ATTACHED TO STRUCTURE, 1" DIA., PVC COATED GALVANIZED STEEL	FOOT	440			440	
	81100805	CONDUIT ATTACHED TO STRUCTURE, 3" DIA., PVC COATED GALVANIZED STEEL	FOOT	30			30	
	81300220	JUNCTION BOX, STAINLESS STEEL, ATTACHED TO STRUCTURE, 6" X 6" X 4"	EACH	4			4	
	81300550	JUNCTION BOX, STAINLESS STEEL, ATTACHED TO STRUCTURE, 12" X 12" X 6"	EACH	2			2	
	81300915	JUNCTION BOX, STAINLESS STEEL, ATTACHED TO STRUCTURE, 20" X 20" X 8"	EACH	2			2	
	81603081	UNIT DUCT, 600V, 3-1C NO.2, 1/C NO.4 GROUND, (XLP-TYPE USE), 1 1/2" DIA.	FOOT	260			260	
	81702110	ELECTRIC CABLE IN CONDUIT, 600V (XLP-TYPE USE) 1/C NO.10	FOOT	1030			1030	
	82110026	LUMINAIRE, LED, UNDERPASS, SUSPENDED, OUTPUT DESIGNATION D	EACH	4			4	
	84200600	REMOVAL OF LIGHTING UNIT, NO SALVAGE	EACH	8			8	
	X8000003	MAINTENANCE OF LIGHTING SYSTEM	CAL MO	12			12	

MODEL: D162W20-sht-SOQ-11 [Sheet]
FILE NAME: c:\pwworking\primera\pwprod\lnguyen2\dms56232\D162W20-sht-SOQ.dgn

Ardmore Roderick

USER NAME = kingaludzia	DESIGNED - KL	REVISED -	
	DRAWN - KL	REVISED -	
	CHECKED - STB	REVISED -	
PLOT DATE = 6/23/2026	DATE - 6/23/2026	REVISED -	

STATE OF ILLINOIS
DEPARTMENT OF TRANSPORTATION

OAK PARK AVENUE OVER I-80
SUMMARY OF QUANTITIES

SCALE: | SHEET 11A OF 11A SHEETS | STA. | TO STA.

F.A.I RTE.	SECTION	COUNTY	TOTAL SHEETS	SHEET NO.
80	FAI 80 23 Bridge Replacement 2	COOK	158	14A
		CONTRACT NO. 62W20		
	ILLINOIS	FED. AID PROJECT		

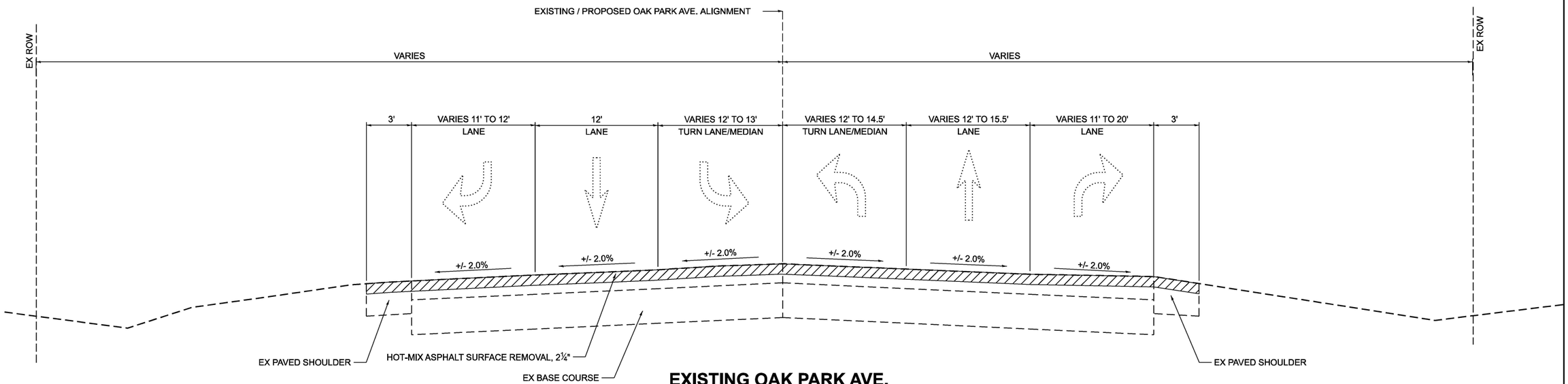

EXISTING OAK PARK AVE.

(LOOKING NORTH)

PR STA. 251+90 TO PR STA. 265+00

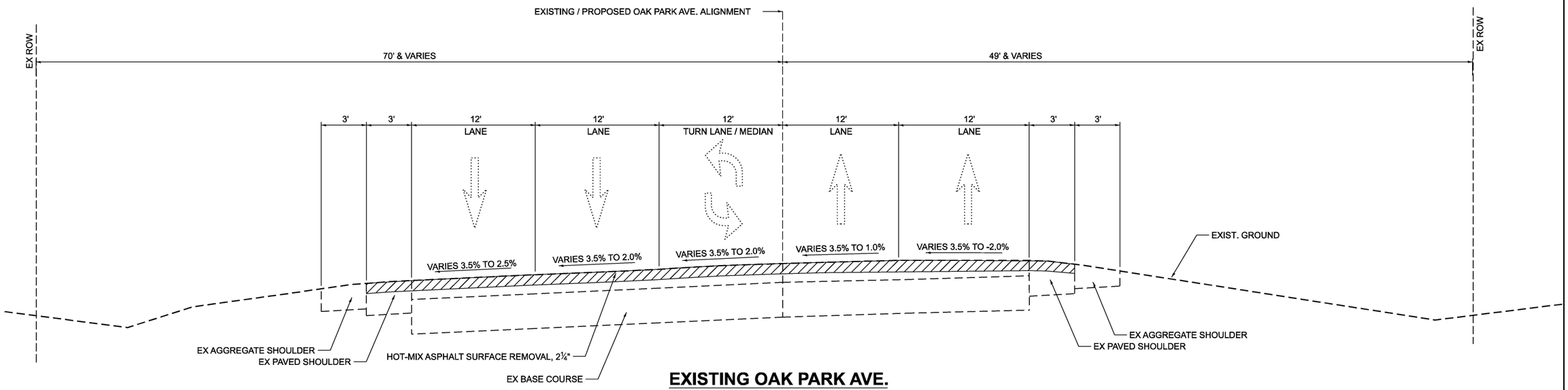

EXISTING OAK PARK AVE.

(LOOKING NORTH)

PR STA. 265+00 TO PR STA. 284+56

MODEL: Typical sections [Sheet]
FILE NAME: c:\pwworking\primera\pwprod\mmathews\dms5623\2\D162W20-sht-typical.dgn

Primera
656 W. JACKSON BLVD. SUITE 628 . CHICAGO IL 60661 P:312-986-9910 F:312-986-9415

USER NAME = mmathews	DESIGNED - MM	REVISED -	
	DRAWN - MM	REVISED -	
	CHECKED - JR	REVISED -	
PLOT DATE = 5/4/2026	DATE - 05/06/2026	REVISED -	

STATE OF ILLINOIS
DEPARTMENT OF TRANSPORTATION

OAK PARK AVENUE OVER I-80
TYPICAL SECTIONS

SCALE: | SHEET 1 OF 8 SHEETS | STA. | TO STA.

F.A.I RTE.	SECTION	COUNTY	TOTAL SHEETS	SHEET NO.
80	FAI 80 23 Bridge Replacement 2	COOK	158	15
		CONTRACT NO. 62W20		
	ILLINOIS | FED. AID PROJECT			

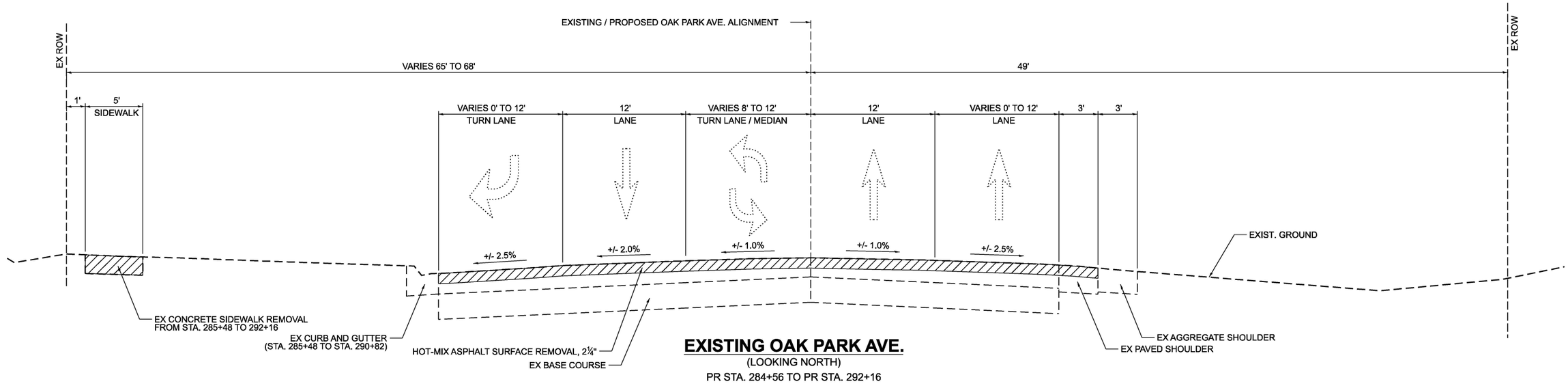

EXISTING OAK PARK AVE.

(LOOKING NORTH)

PR STA. 284+56 TO PR STA. 292+16

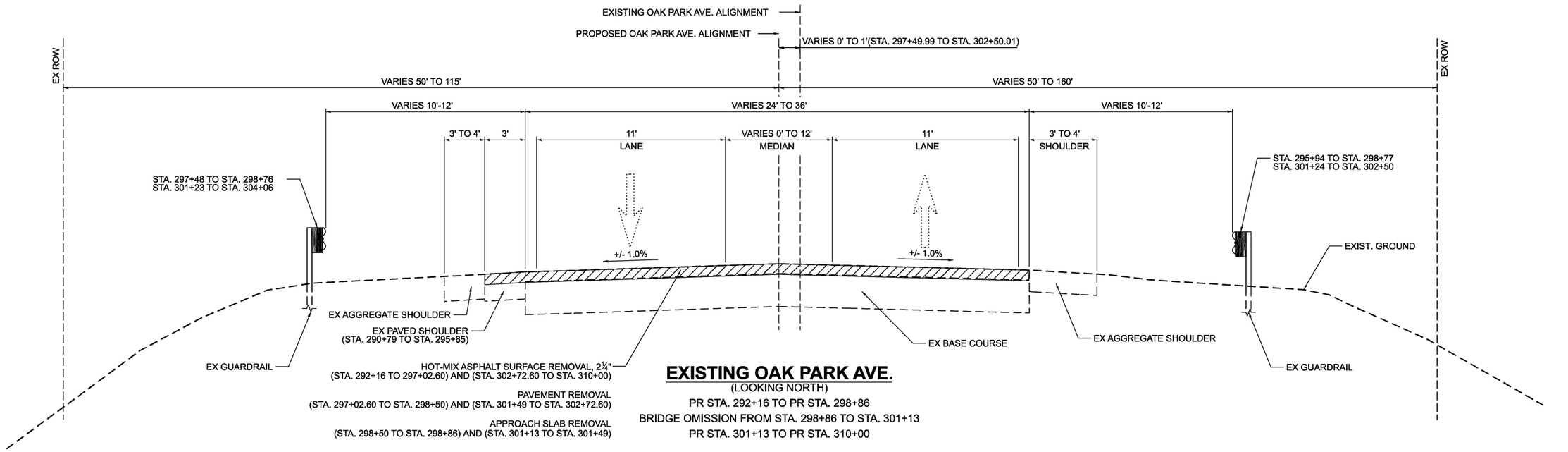

EXISTING OAK PARK AVE.

(LOOKING NORTH)

PR STA. 292+16 TO PR STA. 298+86

BRIDGE OMISSION FROM STA. 298+86 TO STA. 301+13

PR STA. 301+13 TO PR STA. 310+00

MODEL: Typical sections-1 [Sheet]
FILE NAME: c:\pwworking\primera\pwprod\mmathews\dms56232\D162W20-sht-typical.dgn

Primera
650 W. JACKSON BLVD. SUITE 600 . CHICAGO IL 60661 P:312-686-0910 F:312-686-0415

USER NAME = mmathews	DESIGNED - MM	REVISED -	
	DRAWN - MM	REVISED -	
	CHECKED - JR	REVISED -	
PLOT DATE = 5/4/2026	DATE - 05/06/2026	REVISED -	

STATE OF ILLINOIS
DEPARTMENT OF TRANSPORTATION

OAK PARK AVENUE OVER I-80
TYPICAL SECTIONS

SCALE: | SHEET 2 OF 8 SHEETS | STA. | TO STA.

F.A.I RTE.	SECTION	COUNTY	TOTAL SHEETS	SHEET NO.
80	FAI 80 23 Bridge Replacement 2	COOK	158	16
		CONTRACT NO. 62W20		
		ILLINOIS	FED. AID PROJECT	

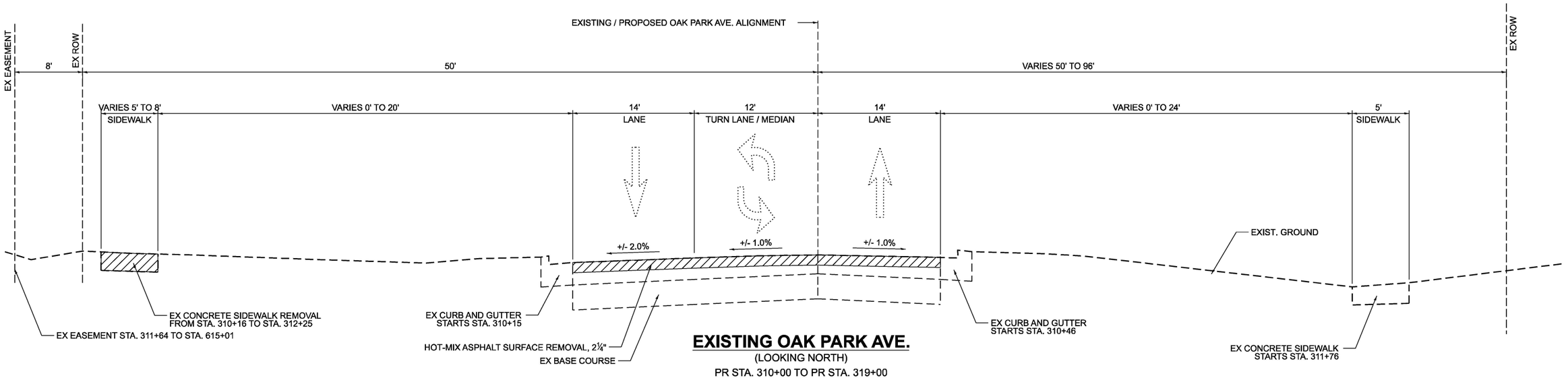

EXISTING OAK PARK AVE.
(LOOKING NORTH)
PR STA. 310+00 TO PR STA. 319+00

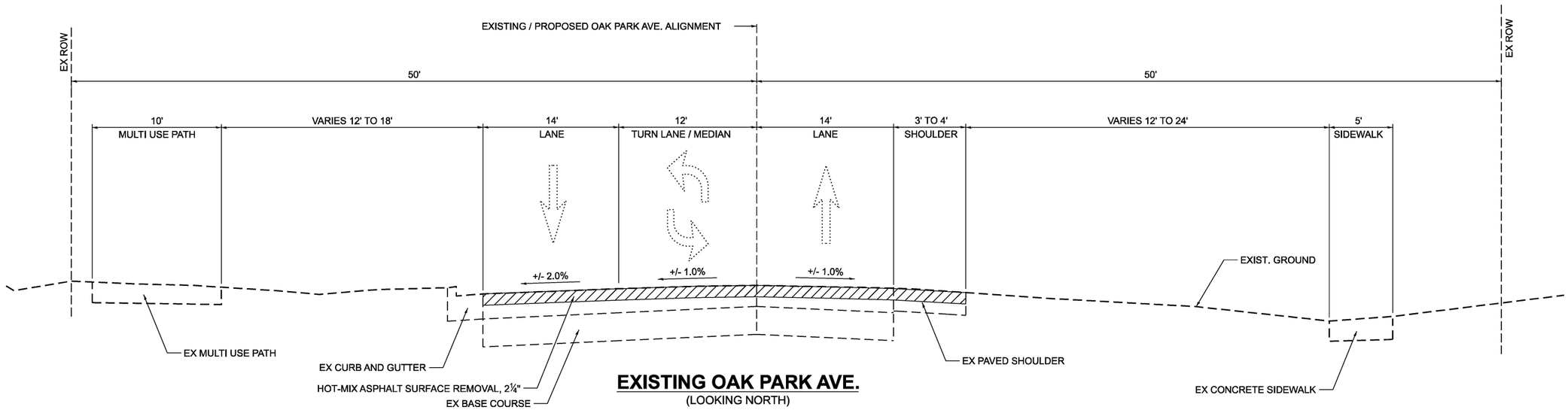

EXISTING OAK PARK AVE.
(LOOKING NORTH)
PR STA. 319+00 TO PR STA. 326+50

MODEL: Typical sections-2 [Sheet]
FILE NAME: c:\pwworking\primera\pwprod\lnguyen2\dms56232\D1f62W20-aht-typical.dgn

Primera
650 W. JACKSON BLVD. SUITE 630 . CHICAGO IL 60661 P:312-986-9910 F:312-986-9415

USER NAME = lnguyen	DESIGNED - MM	REVISED -	
	DRAWN - MM	REVISED -	
	CHECKED - JR	REVISED -	
PLOT DATE = 4/27/2026	DATE - 03/06/2026	REVISED -	

STATE OF ILLINOIS
DEPARTMENT OF TRANSPORTATION

OAK PARK AVENUE OVER I-80
TYPICAL SECTIONS

SCALE: | SHEET 3 OF 8 SHEETS | STA. | TO STA.

F.A.I RTE.	SECTION	COUNTY	TOTAL SHEETS	SHEET NO.
80	FAI 80 23 Bridge Replacement 2	COOK	158	17
		CONTRACT NO. 62W20		
	ILLINOIS	FED. AID PROJECT		

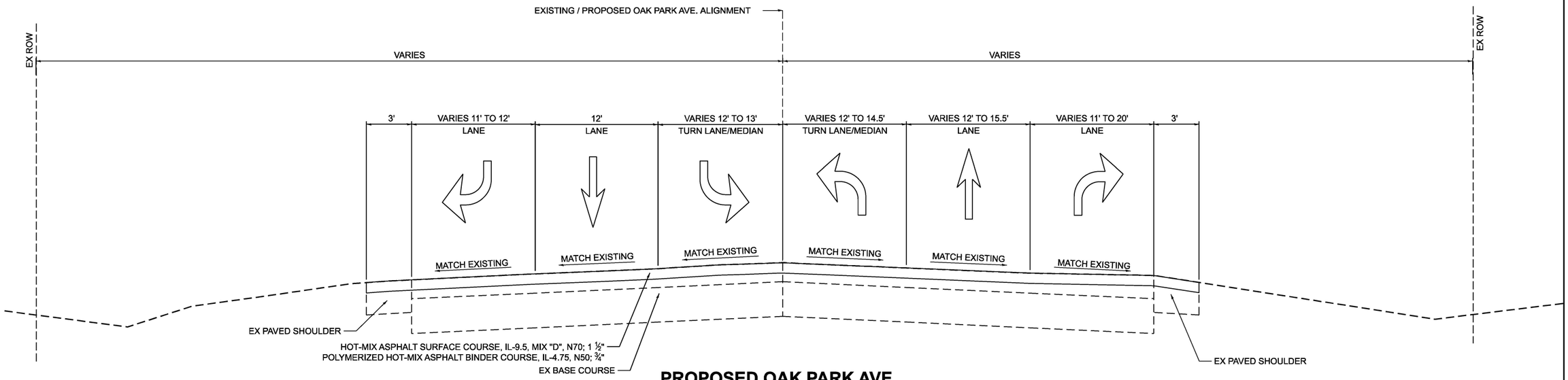

PROPOSED OAK PARK AVE.

(LOOKING NORTH)

PR STA. 251+90 TO PR STA. 265+00

NOTE:

1. LONGITUDINAL JOINT SEALANT SHALL BE PLACED UNDER HMA SURFACE COURSE ALONG OAK PARK AVE. RESURFACING AND RECONSTRUCTION SECTIONS.

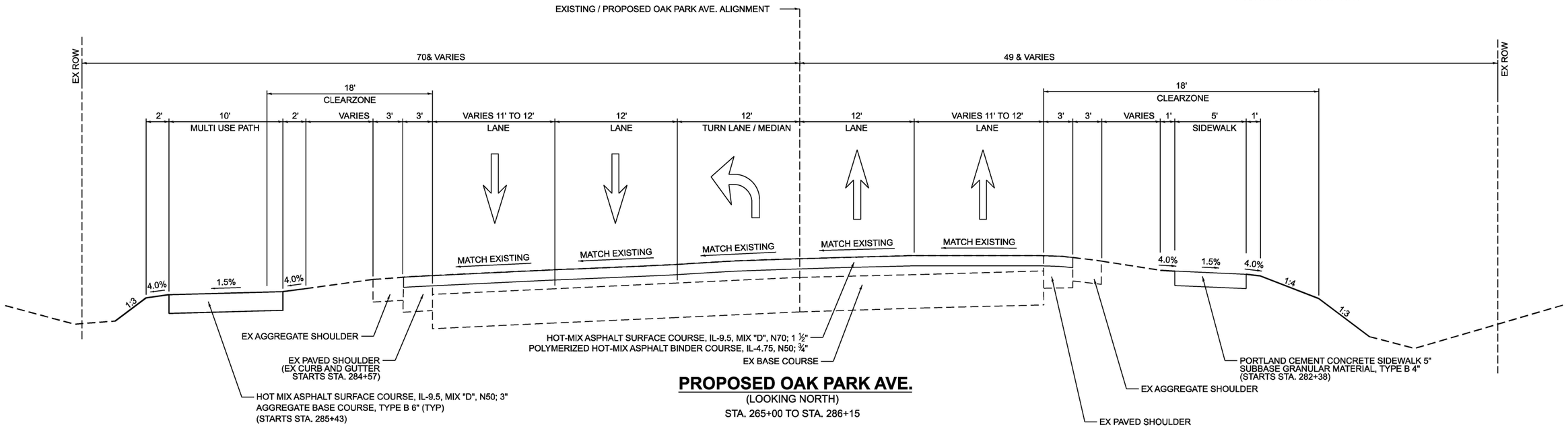

PROPOSED OAK PARK AVE.

(LOOKING NORTH)

STA. 265+00 TO STA. 286+15

MODEL: Typical sections-3 [Sheet]
FILE NAME: c:\pwworking\primera\pwprod\nguyen2\dms56232\D162W20-sht-typical.dgn

Primera
200 W. JACKSON BLVD. SUITE 600 . CHICAGO IL 60661 P:312-986-8910 F:312-986-8915

USER NAME = Inguyen	DESIGNED - MM	REVISED -	
	DRAWN - MM	REVISED -	
	CHECKED - JR	REVISED -	
PLOT DATE = 4/27/2026	DATE - 03/06/2026	REVISED -	

STATE OF ILLINOIS
DEPARTMENT OF TRANSPORTATION

OAK PARK AVENUE OVER I-80
TYPICAL SECTIONS

SCALE: | SHEET 4 OF 8 SHEETS | STA. | TO STA.

F.A.I RTE.	SECTION	COUNTY	TOTAL SHEETS	SHEET NO.
80	FAI 80 23 Bridge Replacement 2	COOK	158	18
		CONTRACT NO. 62W20		
	ILLINOIS FED. AID PROJECT			

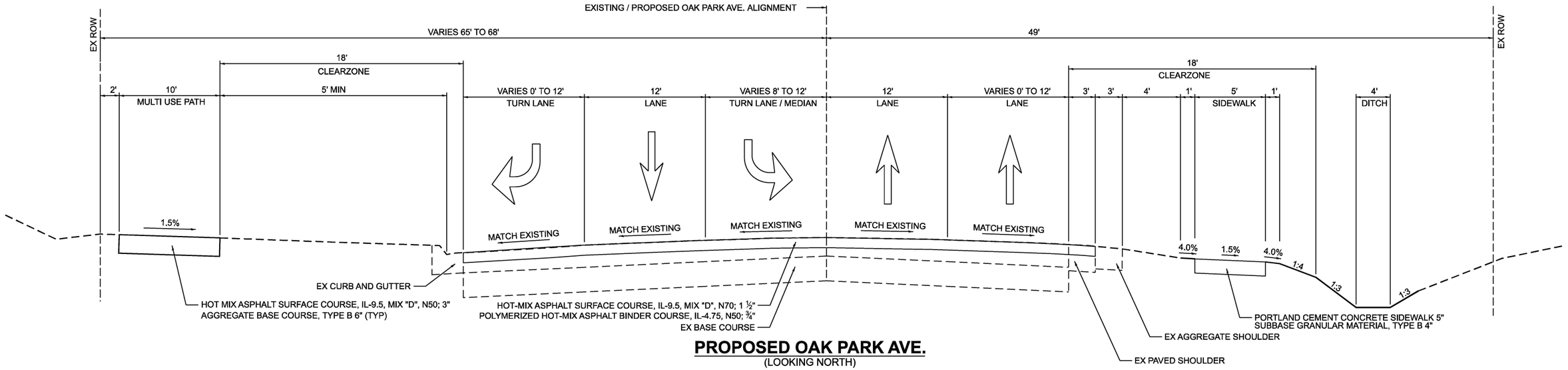

PROPOSED OAK PARK AVE.

(LOOKING NORTH)

STA. 286+15 TO STA. 291+91

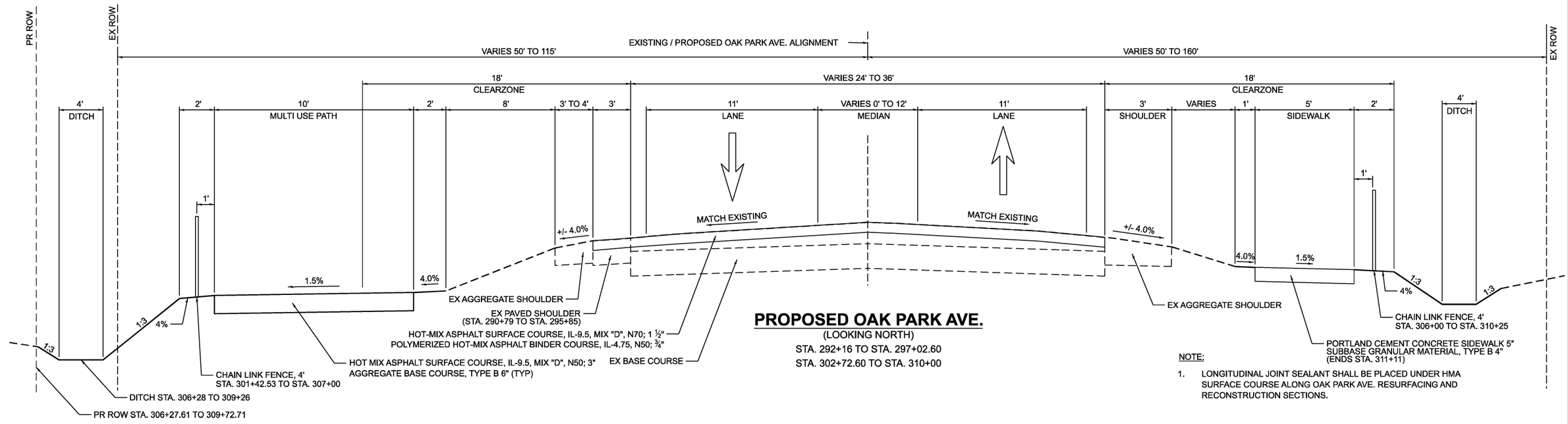

PROPOSED OAK PARK AVE.

(LOOKING NORTH)

STA. 292+16 TO STA. 297+02.60

STA. 302+72.60 TO STA. 310+00

NOTE:

1. LONGITUDINAL JOINT SEALANT SHALL BE PLACED UNDER HMA SURFACE COURSE ALONG OAK PARK AVE. RESURFACING AND RECONSTRUCTION SECTIONS.

MODEL: Typical Sections-5 [Sheet]
FILE NAME: c:\pwworking\primera\pwprod\lnguyen2\dms56232\D162W20-sht-typical.dgn

Primera
650 W. JACKSON BLVD. SUITE 600 . CHICAGO IL 60661 P:312-686-0910 F:312-686-0415

USER NAME = lnguyen	DESIGNED - MM	REVISED -	
	DRAWN - MM	REVISED -	
	CHECKED - JR	REVISED -	
PLOT DATE = 4/27/2026	DATE - 03/06/2026	REVISED -	

STATE OF ILLINOIS
DEPARTMENT OF TRANSPORTATION

OAK PARK AVENUE OVER I-80
TYPICAL SECTIONS

SCALE: | SHEET 5 OF 8 SHEETS | STA. | TO STA.

F.A.I RTE.	SECTION	COUNTY	TOTAL SHEETS	SHEET NO.
80	FAI 80 23 Bridge Replacement 2	COOK	158	19
		CONTRACT NO. 62W20		
		ILLINOIS	FED. AID PROJECT	

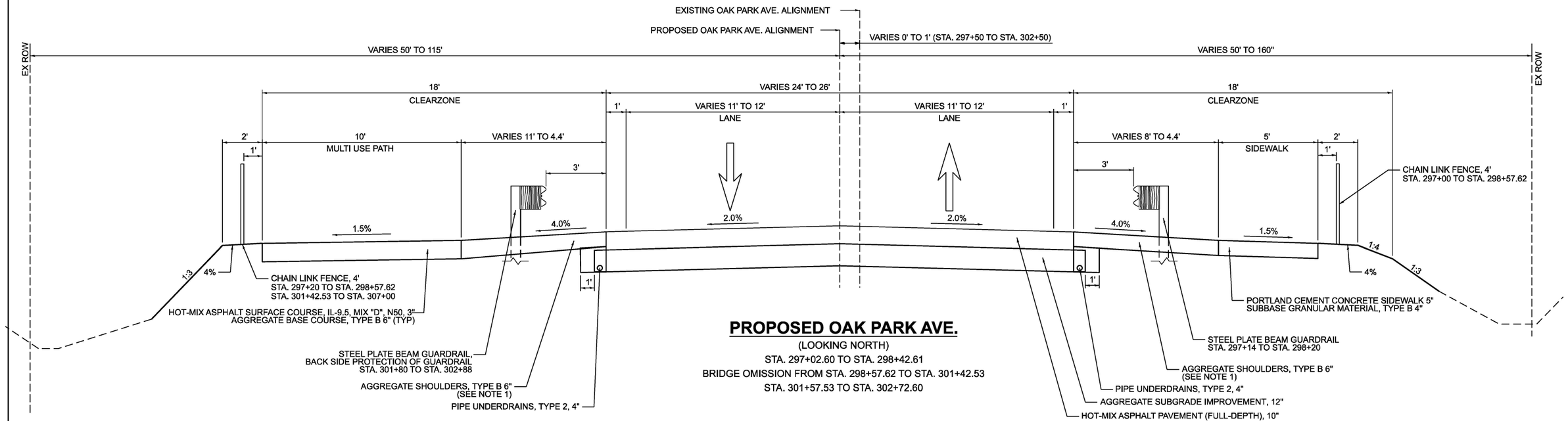

PROPOSED OAK PARK AVE.

(LOOKING NORTH)
STA. 297+02.60 TO STA. 298+42.61
BRIDGE OMISSION FROM STA. 298+57.62 TO STA. 301+42.53
STA. 301+57.53 TO STA. 302+72.60

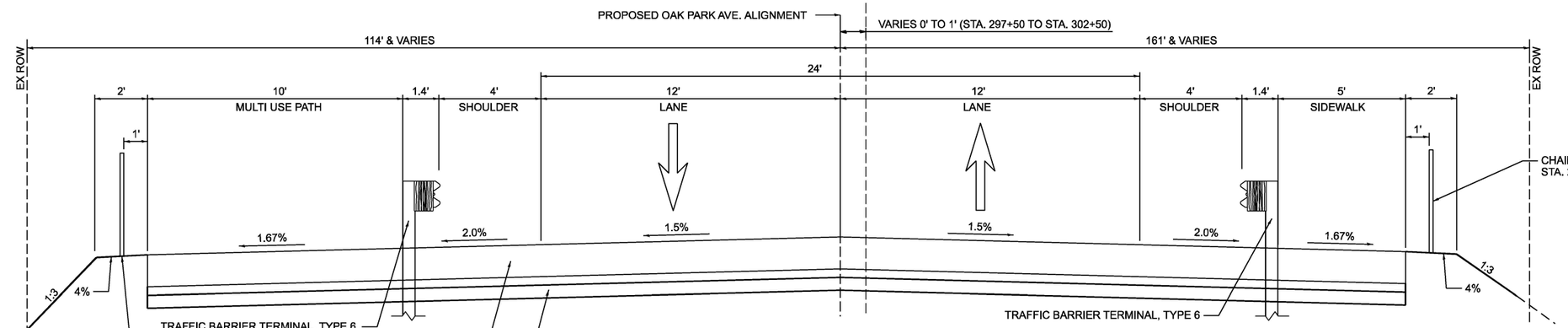

PROPOSED OAK PARK AVE. (PCC CONNECTOR)

(LOOKING NORTH)
STA. 298+42.62 TO STA. 298+57.62
BRIDGE OMISSION FROM STA. 298+57.62 TO STA. 301+42.53
STA. 301+42.53 TO STA. 301+57.53
(SEE NOTE 2)

NOTES:
1. AGGREGATE SHOULDERS TO BE PLACED AT PROPOSED GUARDRAIL LOCATIONS.
2. SEE PCC CONNECTOR DETAIL SHEET FOR ADDITIONAL DETAILS.
3. LONGITUDINAL JOINT SEALANT SHALL BE PLACED UNDER HMA SURFACE COURSE ALONG OAK PARK AVE. RESURFACING AND RECONSTRUCTION SECTIONS.

HOT-MIX ASPHALT MIXTURE REQUIREMENTS MIXTURE TYPE	AIR VOIDS	QUALITY MANAGEMENT PROGRAM (QMP)
PAVEMENT RECONSTRUCTION (HOT MIX ASPHALT PAVEMENT (FULL DEPTH), 10")		
HOT MIX ASPHALT SURFACE COURSE, IL-9.5, MIX "D", N70; 2"	4% @ 70 Gyr.	QC/QA
HOT MIX ASPHALT BINDER COURSE, IL-19.0, N70; 8"	4% @ 70 Gyr.	QC/QA
HOT-MIX ASPHALT SHARED USE PATH		
HOT MIX ASPHALT SURFACE COURSE, IL-9.5, MIX "D", N50; 3" (IN 2 LIFTS)	4% @ 50 Gyr.	QC/QA
PAVEMENT RESURFACING		
HOT MIX ASPHALT SURFACE COURSE, IL-9.5, MIX "D", N70; 1 ½"	4% @ 70 Gyr.	QCP
POLYMERIZED HOT-MIX ASPHALT BINDER COURSE, IL-4.75, N50; ¾"	3.5% @ 50 Gyr.	QCP
SHOULDER RECONSTRUCTION		
POLYMERIZED HOT-MIX ASPHALT SURFACE COURSE, STONE MATRIX ASPHALT, 9.5, MIX "F", N80, 2"	3.5% @ 80 Gyr.	QC/QA
POLYMERIZED HOT-MIX ASPHALT BINDER COURSE, IL-19.0, N90, 4"	4% @ 90 Gyr.	QC/QA
SHOULDER RUMBLE STRIP REMOVAL		
HOT MIX ASPHALT SURFACE COURSE, IL-9.5, MIX "D", N70; 2"	4% @ 70 Gyr.	QC/QA
STABILIZED SUBBASE		
STABILIZED SUB-BASE HOT-MIX ASPHALT, 4"	3% @ 50 Gyr.	QC/QA

QMP DESIGNATIONS: QUALITY CONTROL/QUALITY ASSURANCE(QA/QC); QUALITY CONTROL FOR PERFORMANCE(QCP); PAY FOR PERFORMANCE (PFP)

THE UNIT WEIGHT USED TO CALCULATE ALL HMA SURFACE MIXTURE QUANTITIES IS 112 LBS/ SQ YD/IN

THE "AC TYPE" FOR POLYMERIZED HMA MIXES SHALL BE "SBS/SBR PG 76 -22" AND FOR NON-POLYMERIZED HMA THE "AC TYPE" SHALL BE "PG 64 -22" UNLESS MODIFIED BY RECLAIMED MATERIALS SPECIFICATIONS.

MODEL: Typical Sections-6 [Sheet]
FILE NAME: c:\pwworking\primera\pwprod\nguyen2\dms56232\D162W20-sht-typical.dgn

Primera
500 W. JACKSON BLVD. SUITE 600 . CHICAGO IL 60661 P.312-986-0910 F.312-986-0915

USER NAME = Inguyen	DESIGNED - MM	REVISED -	
	DRAWN - MM	REVISED -	
	CHECKED - JR	REVISED -	
PLOT DATE = 4/27/2026	DATE - 03/06/2026	REVISED -	

STATE OF ILLINOIS
DEPARTMENT OF TRANSPORTATION

OAK PARK AVENUE OVER I-80
TYPICAL SECTIONS

SCALE: | SHEET 6 OF 8 SHEETS | STA. | TO STA.

F.A.I RTE.	SECTION	COUNTY	TOTAL SHEETS	SHEET NO.
80	FAI 80 23 Bridge Replacement 2	COOK	158	20
		CONTRACT NO. 62W20		
	ILLINOIS FED. AID PROJECT			

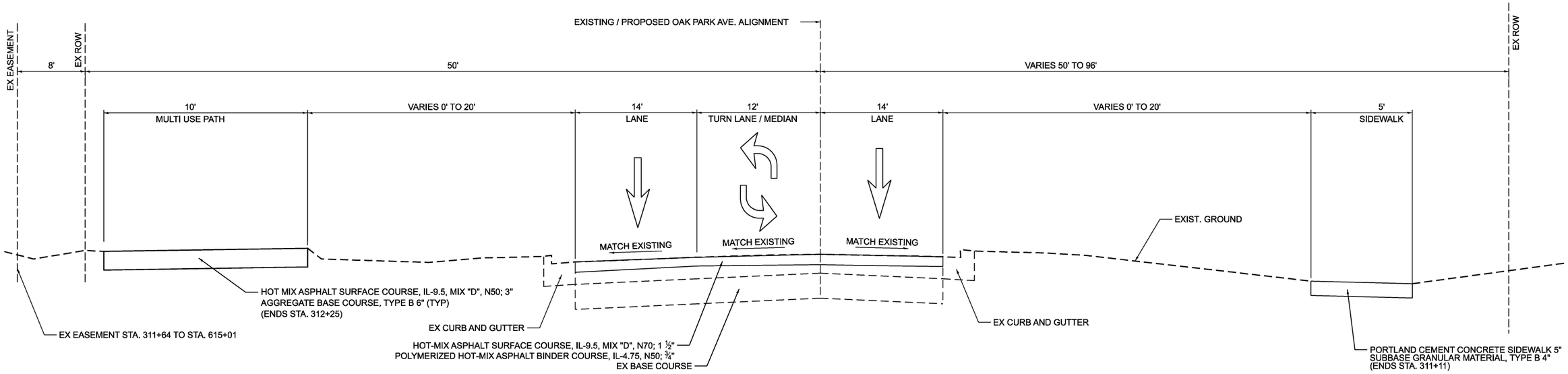

PROPOSED OAK PARK AVE.

(LOOKING NORTH)

PR STA. 310+00 TO PR STA. 319+00

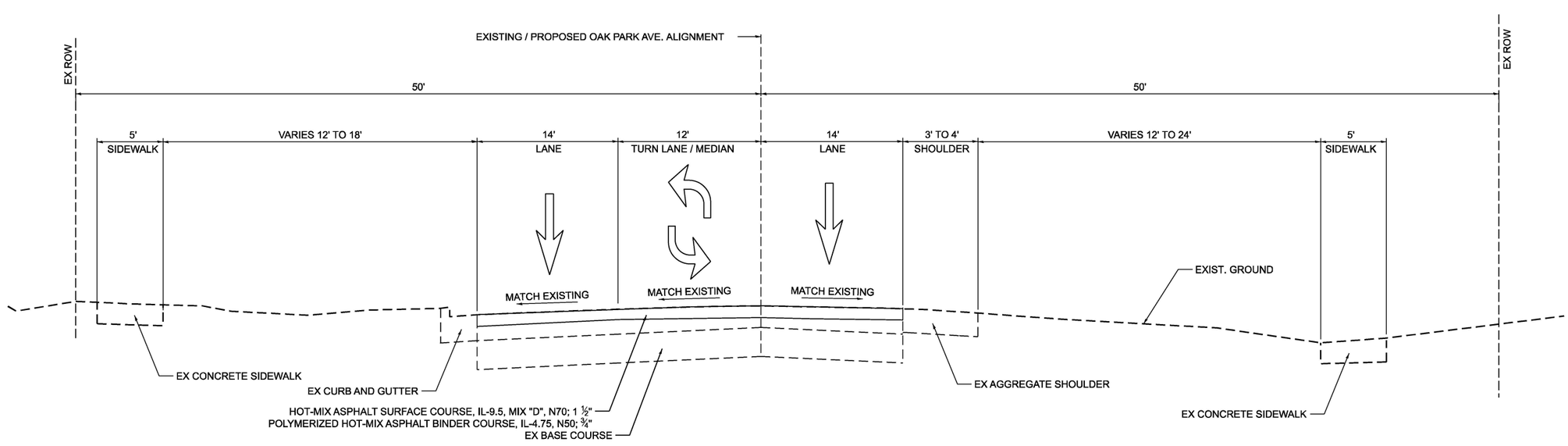

PROPOSED OAK PARK AVE.

(LOOKING NORTH)

PR STA. 319+00 TO PR STA. 326+50

NOTE:

1. LONGITUDINAL JOINT SEALANT SHALL BE PLACED UNDER HMA SURFACE COURSE ALONG OAK PARK AVE. RESURFACING AND RECONSTRUCTION SECTIONS.

MODEL: Typical Sections-7 [Sheet]
FILE NAME: c:\pwworking\primera\pwprod\lnguyen2\dms56232\D1f62W20-aht-typical.dgn

Primera
656 W. JACKSON BLVD. SUITE 628 . CHICAGO IL 60661 P:312-986-9910 F:312-986-9415

USER NAME = lnguyen	DESIGNED - MM	REVISED -
	DRAWN - MM	REVISED -
	CHECKED - JR	REVISED -
PLOT DATE = 2/25/2026	DATE - 03/06/2026	REVISED -

STATE OF ILLINOIS
DEPARTMENT OF TRANSPORTATION

OAK PARK AVENUE OVER I-80
TYPICAL SECTIONS

SCALE: | SHEET 7 OF 8 SHEETS | STA. | TO STA.

F.A.I RTE.	SECTION	COUNTY	TOTAL SHEETS	SHEET NO.
80	FAI 80 23 Bridge Replacement 2	COOK	158	21
		CONTRACT NO. 62W20		
	ILLINOIS FED. AID PROJECT			

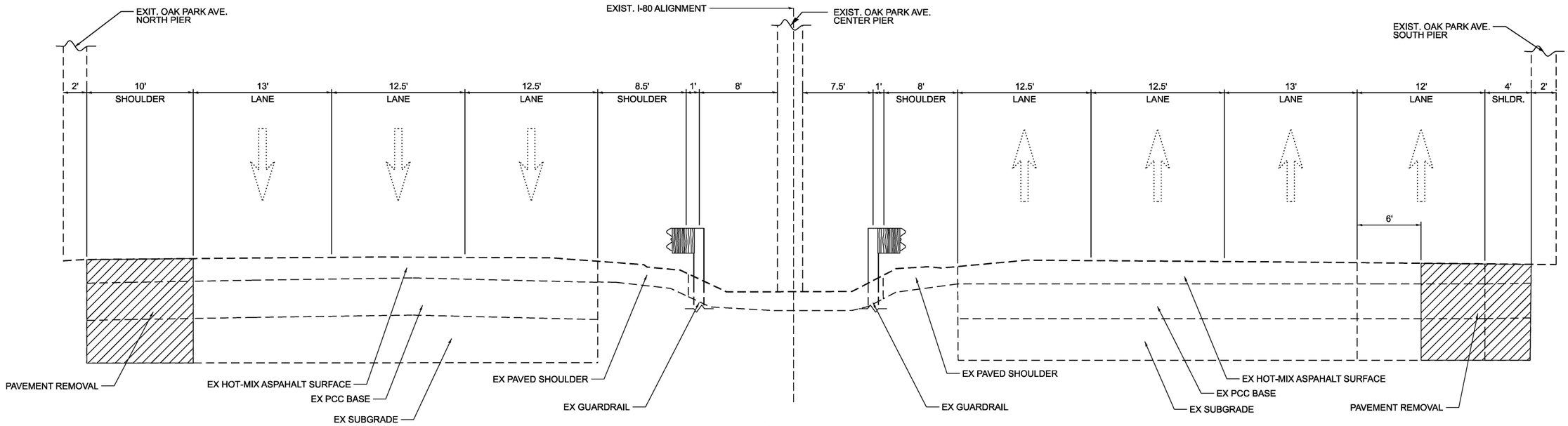

EXISTING I-80

(LOOKING EAST)

STA. 5+70 TO STA. 6+56

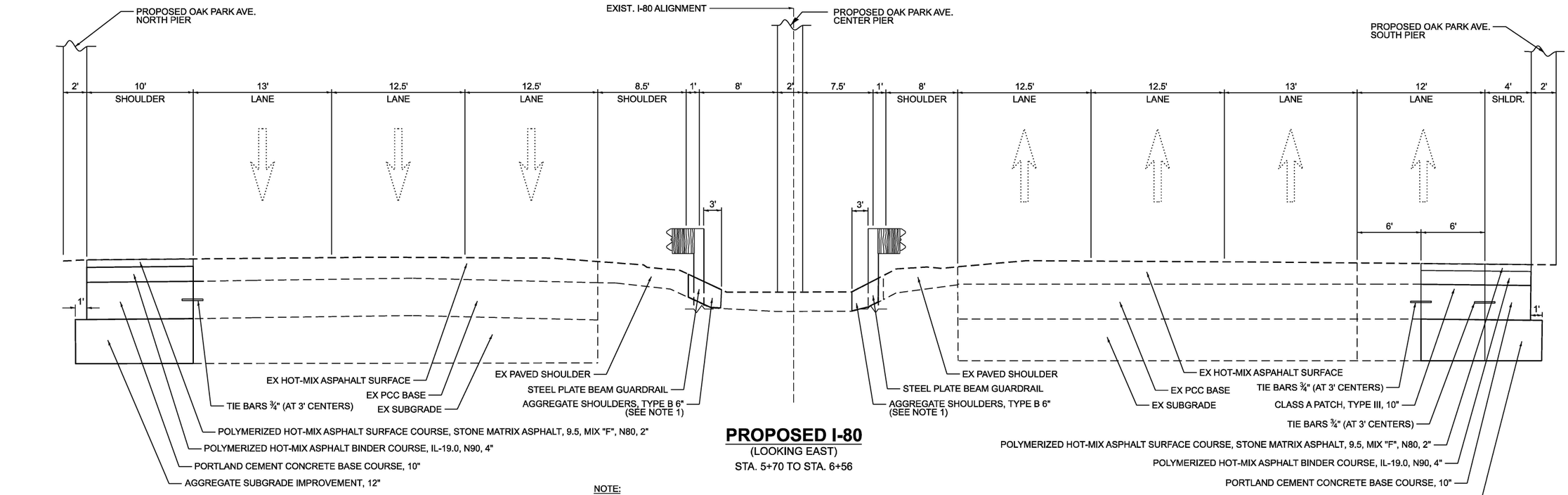

PROPOSED I-80

(LOOKING EAST)

STA. 5+70 TO STA. 6+56

NOTE:

1. AGGREGATE SHOULDERS TO BE PLACED AT PROPOSED GUARDRAIL LOCATIONS.

MODEL: Typical Sections-8 [Sheet]
FILE NAME: c:\pwworking\primera\pwprod\lnguyen2\dms56232\D162W20-sht-typical.dgn

Primera
650 W. JACKSON BLVD. SUITE 600 . CHICAGO IL 60661 P:312-686-0810 F:312-686-0415

USER NAME = lnguyen	DESIGNED - MM	REVISED -	
	DRAWN - MM	REVISED -	
	CHECKED - JR	REVISED -	
PLOT DATE = 4/27/2026	DATE - 03/06/2026	REVISED -	

STATE OF ILLINOIS
DEPARTMENT OF TRANSPORTATION

OAK PARK AVENUE OVER I-80
TYPICAL SECTIONS

SCALE: | SHEET 8 OF 8 SHEETS | STA. | TO STA.

F.A.I RTE.	SECTION	COUNTY	TOTAL SHEETS	SHEET NO.
80	FAI 80 23 Bridge Replacement 2	COOK	158	22
		CONTRACT NO. 62W20		
		ILLINOIS	FED. AID PROJECT	

EARTHWORK SCHEDULE

Station	EARTH EXCAVATION	ADJUSTED EARTH EXCAVATION	FILL	EARTHWORK BALANCE WASTE (+) OR SHORTAGE (-)
	CU YD	CU YD	CU YD	CU YD
282+50	0	0	0	0
283+00	7	6	0	6
283+50	7	6	0	6
284+00	6	5	0	5
284+50	7	6	0	6
285+00	7	6	0	6
285+50	7	6	0	6
286+00	19	16	5	11
286+50	26	22	5	18
287+00	22	19	0	19
287+50	22	19	0	19
288+00	37	32	0	32
288+50	53	45	0	45
289+00	51	43	0	43
289+50	57	48	0	48
290+00	64	55	3	52
290+50	82	69	3	67
291+00	69	59	1	58
291+50	73	62	1	61
292+00	78	66	0	66
292+50	50	42	0	42
293+00	38	33	10	23
293+50	22	18	14	4
294+00	12	11	21	-10
294+50	8	7	33	-26
295+00	7	6	29	-23
295+50	8	7	24	-17
296+00	8	7	25	-19
296+50	6	5	37	-32
297+00	8	6	42	-36
297+50	12	10	83	-73
297+97	12	10	193	-183
298+00	32	27	264	-236
298+50	34	29	270	-241
299+00	0	0	0	0
299+50	0	0	0	0
300+00	0	0	0	0
300+50	0	0	0	0
301+00	0	0	0	0
301+50	0	0	0	0
302+00	39	34	279	-246
302+50	16	14	176	-162
303+00	20	17	73	-56
303+50	17	14	49	-34
304+00	14	12	57	-45
304+50	12	11	45	-34
305+00	11	9	26	-17
305+50	10	9	30	-22
306+00	7	6	56	-50
306+50	7	6	90	-84
307+00	12	10	110	-100
307+50	113	96	129	-33
308+00	141	120	158	-38
308+50	81	69	165	-96
309+00	94	80	170	-90
309+50	99	84	186	-102
310+00	93	79	158	-79
310+50	49	42	74	-32
311+00	12	10	27	-17
311+50	6	5	31	-26
312+00	10	8	19	-11
	TOTAL	1,541	3,172	-1,631

NOTE:
15% SHRINKAGE FACTOR APPLIED TO ADJUSTED EARTH EXCAVATION

MODEL: Schedule [Sheet]
FILE NAME: c:\pwworking\primera\pwprod\lnguyen2\dms56232\D1f62W20-aht-schedule.dgn

Primera
656 W. JACKSON BLVD. SUITE 628 . CHICAGO IL 60661 P:312-986-0910 F:312-986-0493

USER NAME = jrice	DESIGNED - MM	REVISED -
	DRAWN - MM	REVISED -
	CHECKED - JR	REVISED -
PLOT DATE = 5/5/2026	DATE - 05/06/2026	REVISED -

STATE OF ILLINOIS
DEPARTMENT OF TRANSPORTATION

OAK PARK AVENUE OVER I-80
SCHEDULE OF QUANTITIES

SCALE: | SHEET 1 OF 2 SHEETS | STA. | TO STA.

F.A.I RTE.	SECTION	COUNTY	TOTAL SHEETS	SHEET NO.
80	FAI 80 23 Bridge Replacement 2	COOK	158	23
		CONTRACT NO. 62W20		
	ILLINOIS FED. AID PROJECT			

70300150 - SHORT TERM PAVEMENT MARKING REMOVAL	
TYPE	QUANTITY
AS PER 70307120 QTY	4681.42
AS PER 70307130 QTY	140.39
AS PER 70307140 QTY	217.47
AS PER 70307160 QTY	102.23
TOTAL	5141.50

70307120 - TEMPORARY PAVEMENT MARKING - LINE 4" - TYPE IV TAPE					
TYPE	STATION	TO	STATION	OFFSET	QUANTITY
STAGE 1B	09+53.40		15+62.16	70.00' RT	610.53
STAGE 1B	15+62.16		21+60.10	54.26' RT	598.10
STAGE 1B	15+62.16		21+60.10	41.62' RT	597.36
STAGE 1B	15+62.16		21+60.10	30.02' RT	597.41
SOLID YELLOW LINE	15+62.16		21+60.10	17.89' RT	597.42
STAGE 1B	11+08.74		25+09.53	45.67' LT	1397.93
STAGE 1B	11+08.74		25+09.53	34.67' LT	1397.84
STAGE 1B	11+08.74		25+09.53	23.67' LT	1398.18
SOLID YELLOW LINE	11+51.30		25+09.53	12.67' LT	1398.61
STAGE 2A	11+08.74		26+05.00	55.30' LT	1397.73
STAGE 2A	11+08.74		26+05.00	44.30' LT	1397.45
STAGE 2A	11+08.74		26+05.00	33.30' LT	1398.75
SOLID YELLOW LINE	11+08.74		26+05.00	22.30' LT	1398.80
TOTAL					14186.11

70307130 - TEMPORARY PAVEMENT MARKING - LINE 6" - TYPE IV TAPE					
TYPE	STATION	TO	STATION	OFFSET	QUANTITY
STAGE 1B	08+67.33		11+08.74	56.35' LT	76.95
STAGE 1B	09+53.40		15+62.16	54.26' RT	203.82
TOTAL					280.77

70307140 - TEMPORARY PAVEMENT MARKING - LINE 8" - TYPE IV TAPE					
TYPE	STATION	TO	STATION	OFFSET	QUANTITY
STAGE 1B	07+80.25		09+53.40	56.01 RT	329.50
TOTAL					329.50

70307160 - TEMPORARY PAVEMENT MARKING - LINE 12" - TYPE IV TAPE					
TYPE	STATION	TO	STATION	OFFSET	QUANTITY
STAGE 1B	02+71.06		09+53.40	56.021 RT	102.23
TOTAL					102.23

70400100 - TEMPORARY CONCRETE BARRIER					
TYPE	STATION	TO	STATION	OFFSET	QUANTITY
STAGE 1B	16+25.31		20+00.04	56.22' RT	375.42
STAGE 1B	16+99.64		19+71.82	53.32' LT	272.03
STAGE 2A	15+36.65		20+61.29	13.11' LT	235.29
TOTAL					882.74

70400125 - PINNING TEMPORARY CONCRETE BARRIER					
TYPE	STATION	TO	STATION	OFFSET	QUANTITY
STAGE 1B	16+25.31		20+00.04	56.22' RT	180.20
STAGE 1B	16+99.64		19+71.82	53.32' LT	130.57
STAGE 2A	15+36.65		20+61.29	13.11' LT	112.94
TOTAL					423.72

70400200 - RELOCATE TEMPORARY CONCRETE BARRIER					
TYPE	STATION	TO	STATION	OFFSET	QUANTITY
STAGE 2A	14+60.33		20+02.12	15.42' RT	375.42
STAGE 2A	15+98.52		20+37.60	13.14' LT	272.03
TOTAL					647.45

70600260 - IMPACT ATTENUATORS, TEMPORARY (FULLY REDIRECTIVE, NARROW). TEST LEVEL 3					
TYPE	STATION	TO	STATION	OFFSET	QUANTITY
STAGE 1B	16+01.62		16+25.31	62.50' RT	1
STAGE 1B	19+71.82		19+95.51	53.32' LT	1
TOTAL					2

70600332 - IMPACT ATTENUATORS, RELOCATE(FULLY REDIRECTIVE, NARROW). TEST LEVEL 3					
TYPE	STATION	TO	STATION	OFFSET	QUANTITY
STAGE 2A	15+36.64		15+60.33	9.39' RT	1
STAGE 2A	20+37.60		20+61.29	13.11' LT	1
TOTAL					2

78009004 - MODIFIED URETHANE PAVEMENT MARKING - LINE 4"					
TYPE	STATION	TO	STATION	OFFSET	QUANTITY
SOLID WHITE LINE	09+53.40		15+62.16	70.00' RT	610.53
SOLID WHITE LINE	15+62.16		21+60.10	54.26' RT	598.10
SOLID WHITE LINE	15+62.16		21+60.10	41.62' RT	597.36
SOLID WHITE LINE	15+62.16		21+60.10	30.02' RT	597.41
SOLID YELLOW LINE	15+62.16		21+60.10	17.89' RT	597.42
SOLID WHITE LINE	11+08.74		25+09.53	45.67' LT	1397.93
SOLID WHITE LINE	11+08.74		25+09.53	34.67' LT	1397.84
SOLID WHITE LINE	11+08.74		25+09.53	23.67' LT	1398.18
SOLID YELLOW LINE	11+51.30		25+09.53	12.67' LT	1398.61
SOLID WHITE LINE	11+08.74		26+05.00	55.30' LT	1397.73
SOLID WHITE LINE	11+08.74		26+05.00	44.30' LT	1397.45
SOLID WHITE LINE	11+08.74		26+05.00	33.30' LT	1398.75
SOLID YELLOW LINE	11+08.74		26+05.00	22.30' LT	1398.80
TOTAL					14186.11

78009006 - MODIFIED URETHANE PAVEMENT MARKING - LINE 6"					
TYPE	STATION	TO	STATION	OFFSET	QUANTITY
SOLID WHITE LINE - 2' DASH - 6' SKIP	08+67.33		11+08.74	56.35' LT	76.95
SOLID WHITE LINE - 2' DASH - 6' SKIP	09+53.40		15+62.16	54.26' RT	203.82
TOTAL					280.77

78009008 - MODIFIED URETHANE PAVEMENT MARKING - LINE 8"					
TYPE	STATION	TO	STATION	OFFSET	QUANTITY
SOLID WHITE LINE	07+80.25		09+53.40	56.01 RT	329.50
TOTAL					329.50

78009012 - MODIFIED URETHANE PAVEMENT MARKING - LINE 12"					
TYPE	STATION	TO	STATION	OFFSET	QUANTITY
SOLID WHITE LINE	02+71.06		09+53.40	56.021 RT	102.23
TOTAL					102.23

78300200 - PAVEMENT MARKING REMOVAL - WATER BLASTING	
TYPE	QUANTITY
AS PER 70307120 QTY	4681.42
AS PER 70307130 QTY	140.39
AS PER 70307140 QTY	217.47
AS PER 70307160 QTY	102.23
TOTAL	5141.50

MODEL: Schedule-1 [Sheet]
FILE NAME: c:\pwworking\ptmeral\pwprod\nguyen2\dms58232\D162W20-sht-schedule.dgn

MILLENNIA PROFESSIONAL SERVICES
www.millennia.pro

USER NAME = Inguyen	DESIGNED - TVN	REVISED -
	DRAWN - JP/SKP	REVISED -
	CHECKED - TW	REVISED -
PLOT DATE = 5/5/2026	DATE - 05/06/2026	REVISED -

STATE OF ILLINOIS
DEPARTMENT OF TRANSPORTATION

OAK PARK AVENUE OVER I-80
SCHEDULE OF QUANTITIES

SCALE: | SHEET 2 OF 2 SHEETS | STA. | TO STA.

F.A.I RTE.	SECTION	COUNTY	TOTAL SHEETS	SHEET NO.
80	FAI 80 23 Bridge Replacement 2	COOK	158	24
		CONTRACT NO. 62W20		
	ILLINOIS FED. AID PROJECT			

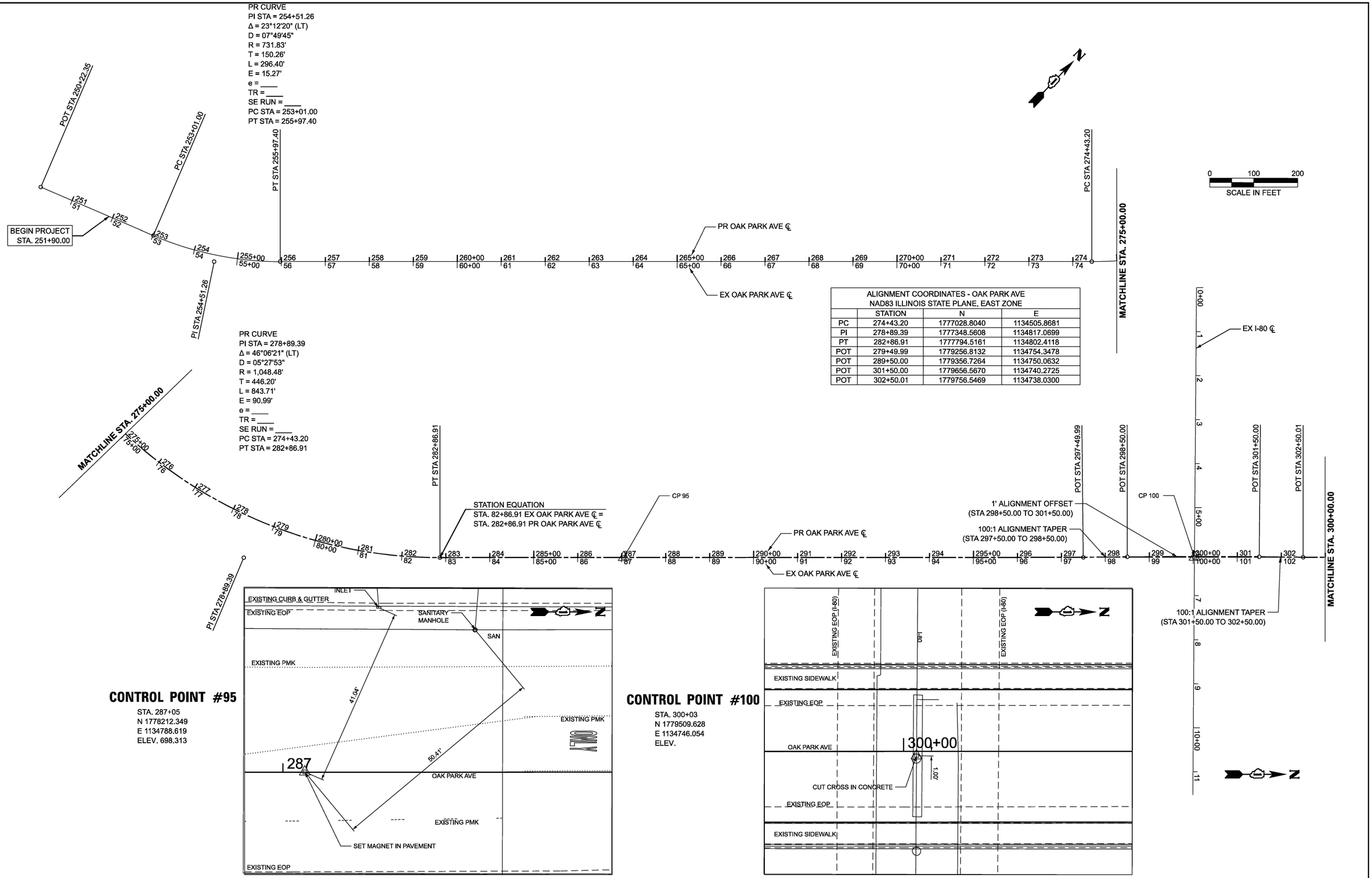

ALIGNMENT COORDINATES - OAK PARK AVE NAD83 ILLINOIS STATE PLANE, EAST ZONE			
	STATION	N	E
PC	274+43.20	1777028.8040	1134505.8681
PI	278+89.39	1777348.5608	1134817.0699
PT	282+86.91	1777794.5161	1134802.4118
POT	279+49.99	1779256.8132	1134754.3478
POT	289+50.00	1779356.7264	1134750.0632
POT	301+50.00	1779656.5670	1134740.2725
POT	302+50.01	1779756.5469	1134738.0300

CONTROL POINT #95

STA. 287+05
N 1778212.349
E 1134788.619
ELEV. 698.313

CONTROL POINT #100

STA. 300+03
N 1779509.628
E 1134746.054
ELEV.

MODEL: Ex Oak Park Ave CL - atb [Sheet]
FILE NAME: c:\pwworking\primera\pwprod\mgonzalez\dms56232\D162W20-sht-ATB.dgn

Primera
650 W. JACKSON BLVD. SUITE 600 . CHICAGO IL 60661 P:312-686-0910 F:312-686-0415

USER NAME = MGonzalez	DESIGNED - MM	REVISED -
	DRAWN - MM	REVISED -
	CHECKED - JR	REVISED -
PLOT DATE = 1/16/2026	DATE - 05/06/2026	REVISED -

STATE OF ILLINOIS
DEPARTMENT OF TRANSPORTATION

OAK PARK AVENUE OVER I-80
ALIGNMENT AND TIES

SCALE: 1"=100' | SHEET 1 OF 2 SHEETS | STA. 274+50.00 TO STA. 300+00.00

F.A.I RTE.	SECTION	COUNTY	TOTAL SHEETS	SHEET NO.
80	FAI 80 23 Bridge Replacement 2	COOK	158	25
		CONTRACT NO. 62W20		
		ILLINOIS	FED. AID PROJECT	

ALIGNMENT COORDINATES - OAK PARK AVE NAD83 ILLINOIS STATE PLANE, EAST ZONE			
	STATION	N	E
POT	327+54.38	1782259.6046	1134656.8379



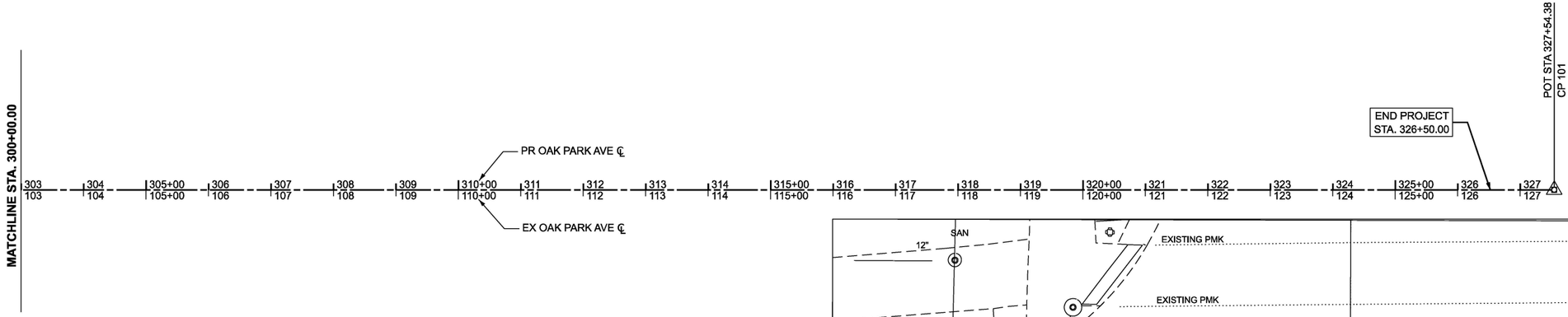

BENCHMARK A

ELEV. 698.055

NAIL IN WEST FACE OF POWER POLE AT NORTHEAST CORNER OF OAK PARK AVE AND ENTRANCE, SOUTH OF PROSPERI DRIVE

BENCHMARK B

ELEV. 717.938

CUT "□" IN END OF CONCRETE WALK AT NORTHEAST CORNER OF OAK PARK AVE BRIDGE OVER I-80

BENCHMARK C

ELEV. 699.138

CUT "□" ON SOUTHWEST OF TRAFFIC SIGNAL CONTROL BOX PAD AT NORTHEAST CORNER OF 183RD ST AND OAK PARK AVE

CONTROL POINT #101

STA. 127+54.38
N 1782259.605
E 1134656.838
ELEV. 699.993

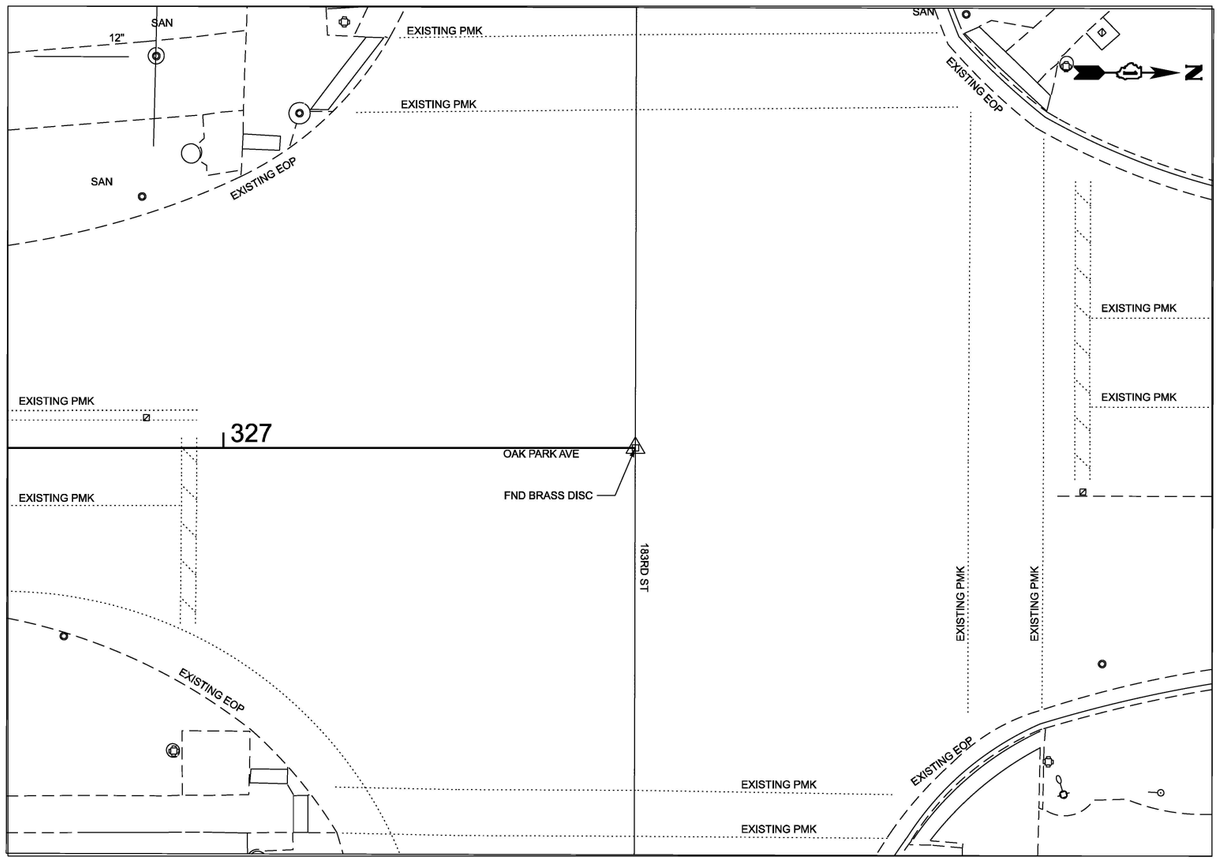

MODEL: Ex Oak Park Ave CL - atb-1 [Sheet]
FILE NAME: c:\pwworking\primera\pwprod\mmathews\dms56232\D162W20-sht-ATB.dgn

Primera
650 W. JACKSON BLVD. SUITE 600 CHICAGO IL 60661 P:312-686-0910 F:312-686-0915

USER NAME = mmathews	DESIGNED - MM	REVISED -	
	DRAWN - MM	REVISED -	
	CHECKED - JR	REVISED -	
PLOT DATE = 5/4/2026	DATE - 05/06/2026	REVISED -	

STATE OF ILLINOIS
DEPARTMENT OF TRANSPORTATION

OAK PARK AVENUE OVER I-80
ALIGNMENT AND TIES

SCALE: 1"=100' | SHEET 2 OF 2 SHEETS | STA. 303+00.00 TO STA. 327+54.38

F.A.I RTE.	SECTION	COUNTY	TOTAL SHEETS	SHEET NO.
80	FAI 80 23 Bridge Replacement 2	COOK	158	26
		CONTRACT NO. 62W20		
		ILLINOIS	FED. AID PROJECT	

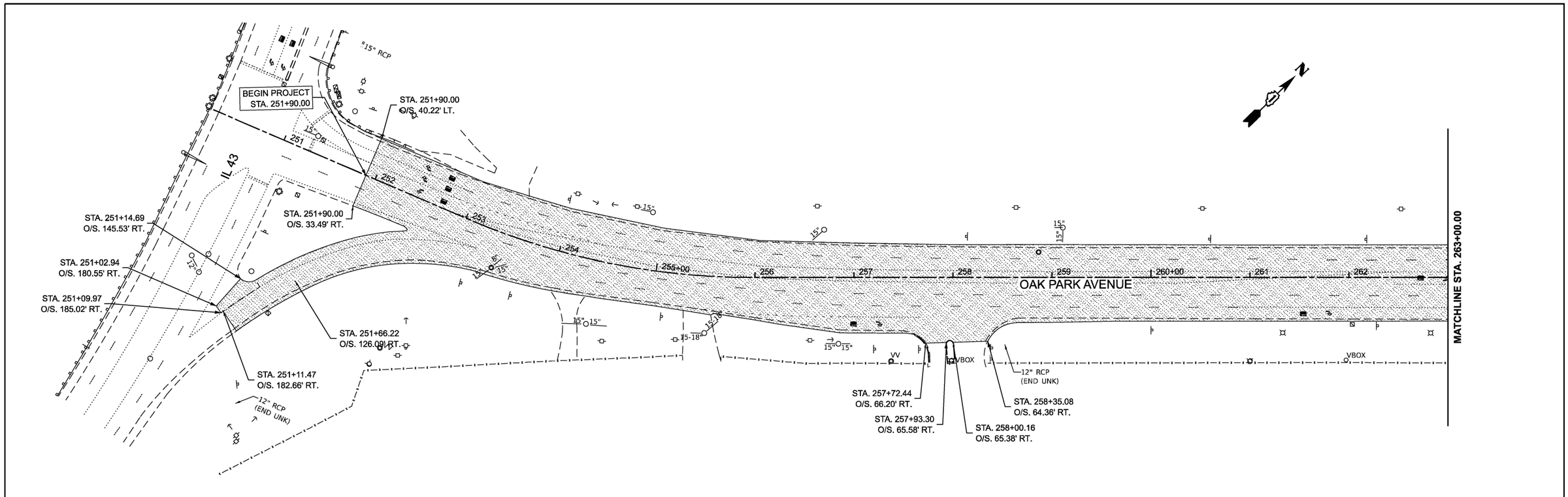

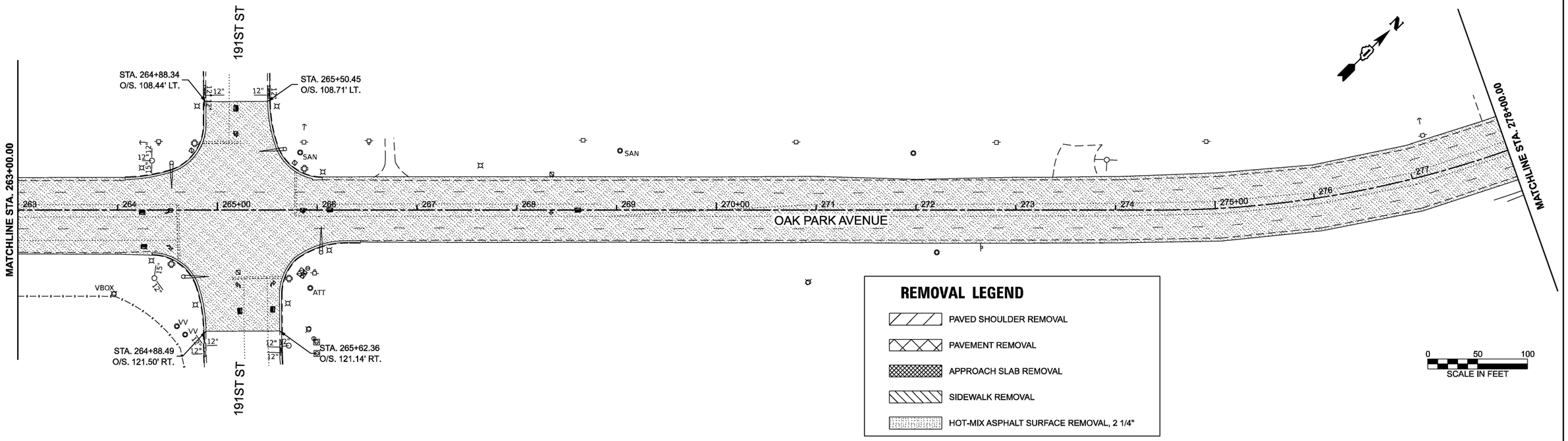

REMOVAL LEGEND

- PAVED SHOULDER REMOVAL
- PAVEMENT REMOVAL
- APPROACH SLAB REMOVAL
- SIDEWALK REMOVAL
- HOT-MIX ASPHALT SURFACE REMOVAL, 2 1/4"

0 50 100
SCALE IN FEET

MODEL: PR Oak Park Ave CL - Plan 1 [Sheet]
FILE NAME: c:\pwworking\primera\pwprod\mgonzalez\dms56232\D162W20-sht-removal.dgn

Primera
650 W. JACKSON BLVD. SUITE 600 . CHICAGO IL 60661 P:312-686-0910 F:312-686-0415

USER NAME = mmathews	DESIGNED - MM	REVISED -	
	DRAWN - MM	REVISED -	
	CHECKED - JR	REVISED -	
PLOT DATE = 1/16/2026	DATE - 05/06/2026	REVISED -	

STATE OF ILLINOIS
DEPARTMENT OF TRANSPORTATION

OAK PARK AVENUE OVER I-80
REMOVAL PLAN

SCALE: 1"=50' | SHEET 1 OF 4 SHEETS | STA. 248+00.00 TO STA. 278+00.00

F.A.I RTE.	SECTION	COUNTY	TOTAL SHEETS	SHEET NO.
80	FAI 80 23 Bridge Replacement 2	COOK	158	27
		CONTRACT NO. 62W20		
		ILLINOIS	FED. AID PROJECT	

MATCHLINE STA. 278+00.00

MATCHLINE STA. 293+00.00

PROSPERI DRIVE

NORTH ACCESS DRIVE

OAK PARK AVENUE

EX ROW (TYP)

PR ROW

STA. 285+43.01
O/S. 90.93' LT

STA. 285+43.83
O/S. 83.59' LT

STA. 285+47.85
O/S. 68.75' LT

STA. 285+50.84
O/S. 62.71' LT

STA. 285+58.43
O/S. 63.05' LT

STA. 285+63.59
O/S. 62.90' LT

STA. 285+57.94
O/S. 54.37' LT

STA. 285+64.24
O/S. 48.43' LT

STA. 285+66.02
O/S. 45.94' LT

STA. 285+07.51
O/S. 90.85' LT

STA. 289+18.25
O/S. 67.17' LT

STA. 289+17.34
O/S. 67.17' LT

STA. 289+16.53
O/S. 67.77' LT

STA. 289+16.13
O/S. 60.94' LT

STA. 289+12.69
O/S. 50.35' LT

STA. 289+46.06
O/S. 67.04' LT

STA. 289+46.99
O/S. 66.84' LT

STA. 289+47.73
O/S. 66.78' LT

STA. 289+48.42
O/S. 60.30' LT

STA. 289+51.45
O/S. 50.09' LT

STA. 292+16.10
O/S. 64.81' LT

STA. 292+16.24
O/S. 60.02' LT

STA. 281+72.05
O/S. 51.14' RT

STA. 282+30.33
O/S. 49.93'

STA. 284+57.47
O/S. 34.18' RT

STA. 285+03.61
O/S. 65.57' RT

STA. 285+56.09
O/S. 25.27' RT

STA. 285+92.21
O/S. 26.12' RT

STA. 285+90.49
O/S. 35.64' RT

STA. 285+43.85
O/S. 66.77' RT

RELOCATE EXISTING UTILITY CABINET (BY OTHERS)
STA. 287+83.7, 59.9' LT

LIMITS OF CONSTRUCTION

REMOVAL LEGEND

- PAVED SHOULDER REMOVAL
- PAVEMENT REMOVAL
- APPROACH SLAB REMOVAL
- SIDEWALK REMOVAL
- HOT-MIX ASPHALT SURFACE REMOVAL, 2 1/4"
- GUARDRAIL/FENCE REMOVAL
- COMBINATION CURB AND GUTTER REMOVAL
- TREE REMOVAL

EB I-80

WB I-80

RELOCATE EXISTING COMED POLE (BY OTHERS)
STA. 307+37.2, 36.6' LT

STA. 297+48.62
O/S. 25.21' LT.

STA. 297+02.60
O/S. 14.91' LT.

STA. 297+02.60
O/S. 12.08' LT

STA. 297+94.21
O/S. 24.58' RT

STA. 297+02.60
O/S. 11.89' RT

STA. 297+02.60
O/S. 15.34' RT

STA. 298+50.28
O/S. 10.97' LT

STA. 298+75.56
O/S. 21.70' LT

STA. 298+86.24
O/S. 10.99' LT

STA. 298+50.00
O/S. 13.30' RT

STA. 298+86.16
O/S. 12.73' RT

STA. 298+76.50
O/S. 23.31' RT

STA. 301+23.06
O/S. 21.94' LT

STA. 301+12.93
O/S. 11.24' LT.

STA. 301+49.05
O/S. 11.25' LT.

STA. 302+72.60
O/S. 14.87' LT

STA. 302+72.60
O/S. 12.08' LT

STA. 304+05.64
O/S. 25.13' LT

STA. 302+72.60
O/S. 11.43' RT

STA. 301+49.05
O/S. 13.42' RT.

STA. 302+72.60
O/S. 15.13' RT.

STA. 301+23.82
O/S. 24.86' RT

STA. 302+50.01
O/S. 24.28' RT

STA. 301+13.04
O/S. 12.98' RT.

NOTE:
CLEARING AREAS EXTEND FROM LIMITS OF CONSTRUCTION TO RIGHT OF WAY. CLEARING AREAS SHALL INCLUDE REMOVAL OF SAPLINGS (3 TO 6 UNITS IN DIAMETER), BRUSH, AND DEAD, DISEASED, AND INVASIVE VEGETATION. CLEARING SHALL BE INCIDENTAL TO EARTH EXCAVATION. CLEARING WILL NOT BE MEASURED FOR PAYMENT.

0 50 100
SCALE IN FEET

MODEL: PR Oak Park Ave CL - Plan 3 [Sheet]
FILE NAME: c:\pwworking\primera\pwprod\mgonzalez\dms56232\D162W20-sht-removal.dgn

Primera
650 W. JACKSON BLVD. SUITE 808 . CHICAGO IL 60661 P:312-086-0910 F:312-086-0915

USER NAME = mmathews	DESIGNED - MM	REVISED -	
	DRAWN - MM	REVISED -	
	CHECKED - JR	REVISED -	
PLOT DATE = 5/5/2026	DATE - 05/06/2026	REVISED -	

STATE OF ILLINOIS
DEPARTMENT OF TRANSPORTATION

OAK PARK AVENUE OVER I-80
REMOVAL PLAN

SCALE: 1"=50' | SHEET 2 OF 4 SHEETS | STA. 278+00.00 | TO STA. 308+00.00

F.A.I RTE.	SECTION	COUNTY	TOTAL SHEETS	SHEET NO.
80	FAI 80 23 Bridge Replacement 2	COOK	158	28
		CONTRACT NO. 62W20		
	ILLINOIS	FED. AID PROJECT		

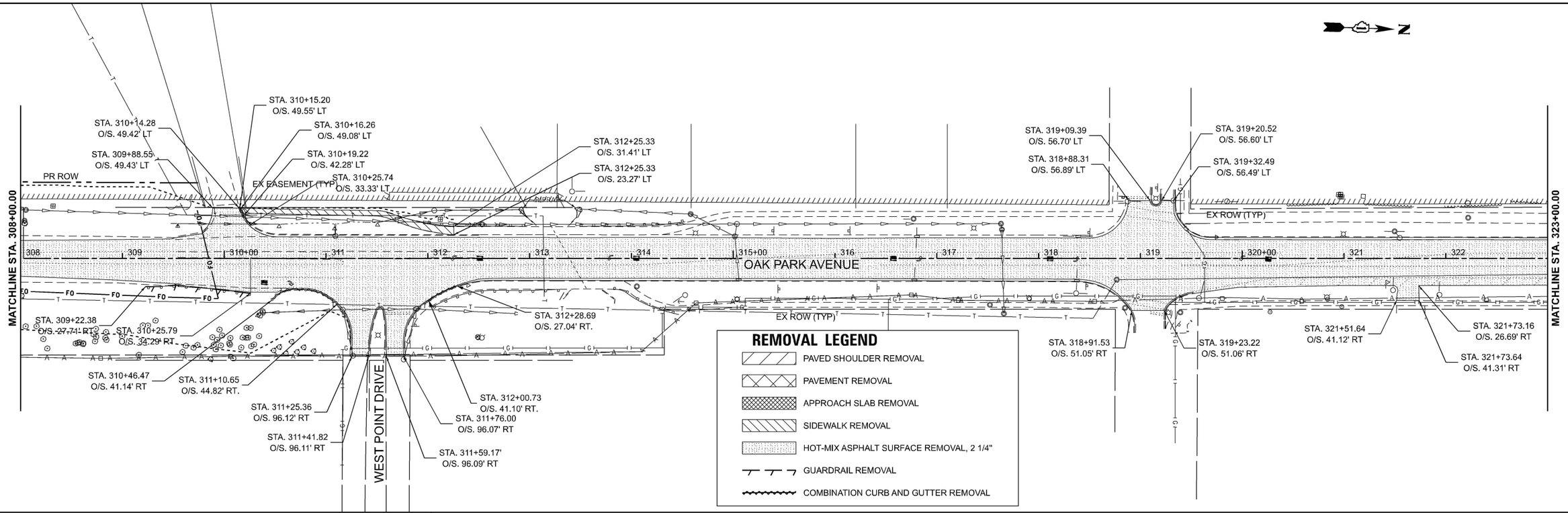

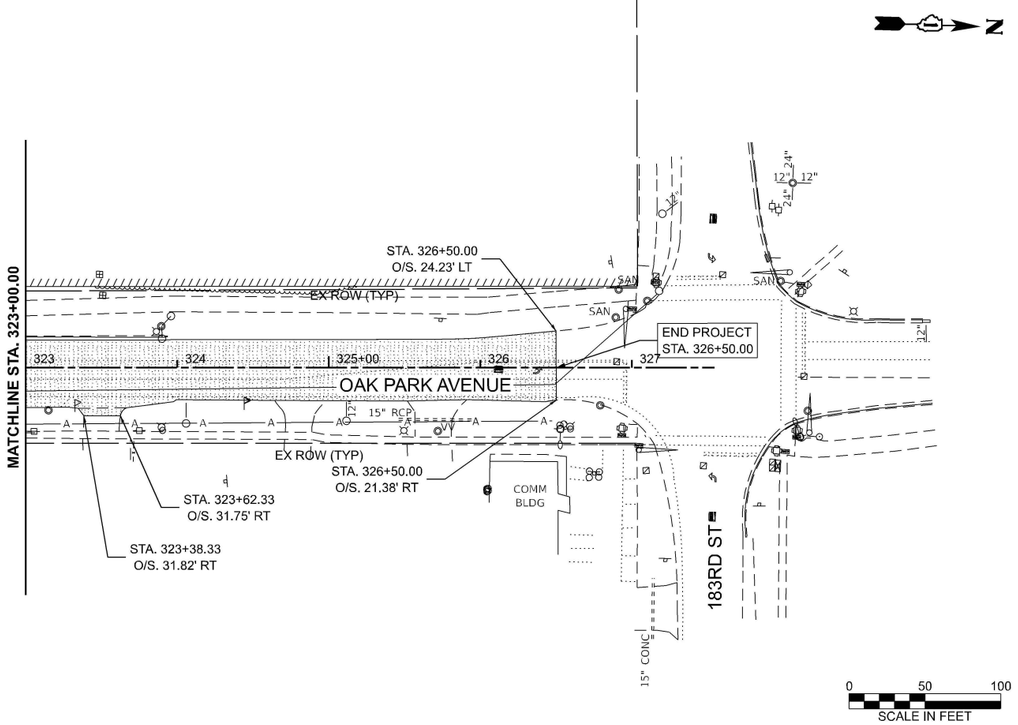

TREE REMOVAL (6 TO 15 UNITS DIAMETER) SCHEDULE

POINT	NORTHING	EASTING	STATION	OFFSET	LT/RT	UNITS
T1	1778896.135	1134724.62	293+90.49	41.56	LT	6
T2	1778936.779	1134737.50	294+30.69	27.35	LT	6
T3	1779249.02	1134710.13	297+43.66	44.45	LT	6
T4	1779296.463	1134693.60	297+92.21	58.99	LT	6
T5	1779302.053	1134693.20	297+97.81	59.15	LT	6
T6	1779303.71	1134726.83	297+98.03	25.48	LT	6
T7	1779303.591	1134707.52	297+98.74	44.79	LT	6
T8	1779305.435	1134696.14	298+01.07	56.07	LT	6
T9	1779333.03	1134711.43	298+27.98	39.62	LT	6
T10	1779345.929	1134716.80	298+40.64	33.70	LT	6
T11	1779356.723	1134722.70	298+50.89	27.35	LT	6
T12	1779364.452	1134724.08	298+58.57	25.72	LT	6
T13	1779364.559	1134714.65	298+58.98	35.14	LT	6
T14	1779364.634	1134710.60	298+59.19	39.19	LT	8
T15	1779388.991	1134789.32	298+80.97	40.29	RT	6
T17	1779619.508	1134718.66	301+13.67	22.81	LT	6
T18	1779628.712	1134773.91	301+21.06	32.71	RT	8
T20	1779634.028	1134710.05	301+28.46	30.95	LT	6
T21	1779634.642	1134708.73	301+29.12	32.24	LT	6
T22	1779634.431	1134696.71	301+29.30	44.26	LT	6
T23	1779637.915	1134771.87	301+30.33	30.97	RT	10
T24	1779635.53	1134695.78	301+30.43	45.16	LT	8
T25	1779639.111	1134709.86	301+33.55	30.97	LT	12 (2X6 MULTI)
T26	1779638.777	1134677.15	301+34.28	63.67	LT	6
T27	1779639.58	1134701.00	301+34.30	39.81	LT	6
T28	1779640.567	1134692.33	301+35.57	48.44	LT	6
T29	1779643.324	1134665.34	301+39.21	75.32	LT	10
T30	1779646.244	1134707.27	301+40.76	33.32	LT	12 (2X6 MULTI)
T32	1779647.337	1134646.76	301+43.83	93.77	LT	12 (2X6 MULTI)
T33	1779650.529	1134671.99	301+46.19	68.44	LT	6
T34	1779652.511	1134648.30	301+48.95	92.05	LT	8

TREE REMOVAL (6 TO 15 UNITS DIAMETER) SCHEDULE CONT.

POINT	NORTHING	EASTING	STATION	OFFSET	LT/RT	UNITS
T35	1779652.486	1134646.44	301+48.98	93.92	LT	6
T36	1779662.227	1134776.40	301+54.85	36.24	RT	6
T37	1779661.512	1134710.80	301+55.61	29.35	LT	12 (2X6 MULTI)
T38	1779665.00	1134699.05	301+59.36	41.03	LT	12 (2X6 MULTI)
T39	1779666.214	1134687.35	301+60.83	52.69	LT	6
T41	1779672.643	1134779.05	301+65.20	39.13	RT	6
T42	1779688.11	1134695.83	301+82.53	43.72	LT	6
T43	1779694.28	1134701.10	301+88.58	38.31	LT	6
T44	1779695.84	1134701.80	301+90.13	37.58	LT	6
T45	1779698.363	1134679.87	301+93.14	59.45	LT	6
T46	1779700.484	1134700.68	301+94.79	38.60	LT	6
T47	1779706.543	1134676.89	302+01.39	62.25	LT	6
T48	1779725.634	1134696.13	302+20.04	42.58	LT	6
T49	1779727.81	1134691.78	302+22.31	46.88	LT	6
T50	1779894.301	1134700.34	303+88.91	33.20	LT	6
T51	1780110.606	1134689.75	306+05.44	36.78	LT	6
T52	1780200.464	1134683.06	306+95.47	40.55	LT	6
T53	1780232.376	1134687.41	307+27.23	35.17	LT	6
					TOTAL:	340

TREE REMOVAL (OVER 15 UNITS DIAMETER) SCHEDULE

POINT	NORTHING	EASTING	STATION	OFFSET	LT/RT	UNITS
T16	1779390.986	1134776.51	298+83.38	27.553	RT	18
T19	1779630.137	1134706.94	301+24.67	34.18	LT	18 (3X6 MULTI)
T31	1779644.916	1134663.39	301+40.87	77.22	LT	24 (4X6 MULTI)
T40	1779666.528	1134693.59	301+61.01	46.45	LT	18 (3X6 MULTI)
					TOTAL:	78

MODEL: PR Oak Park Ave CL - Plan 5 [Sheet]
FILE NAME: c:\pwworking\primera\pwprod\mgonzalez\d0ms56232\D1162W20-sht-removal.dgn

Primera
650 W. JACKSON BLVD. SUITE 608 . CHICAGO IL 60661 P:312-986-9110 F:312-986-9415

USER NAME = MGonzalez	DESIGNED - MM	REVISED -	STATE OF ILLINOIS DEPARTMENT OF TRANSPORTATION	OAK PARK AVENUE OVER I-80 REMOVAL PLAN
	DRAWN - MM	REVISED -		
	CHECKED - JR	REVISED -		
PLOT DATE = 5/5/2026	DATE - 05/06/2026	REVISED -		SCALE: 1"=50' SHEET 3 OF 4 SHEETS STA. 308+00.00 TO STA. 338+00.00

F.A.I RTE.	SECTION	COUNTY	TOTAL SHEETS	SHEET NO.
80	FAI 80 23 Bridge Replacement 2	COOK	158	29
		CONTRACT NO. 62W20		
	ILLINOIS FED. AID PROJECT			

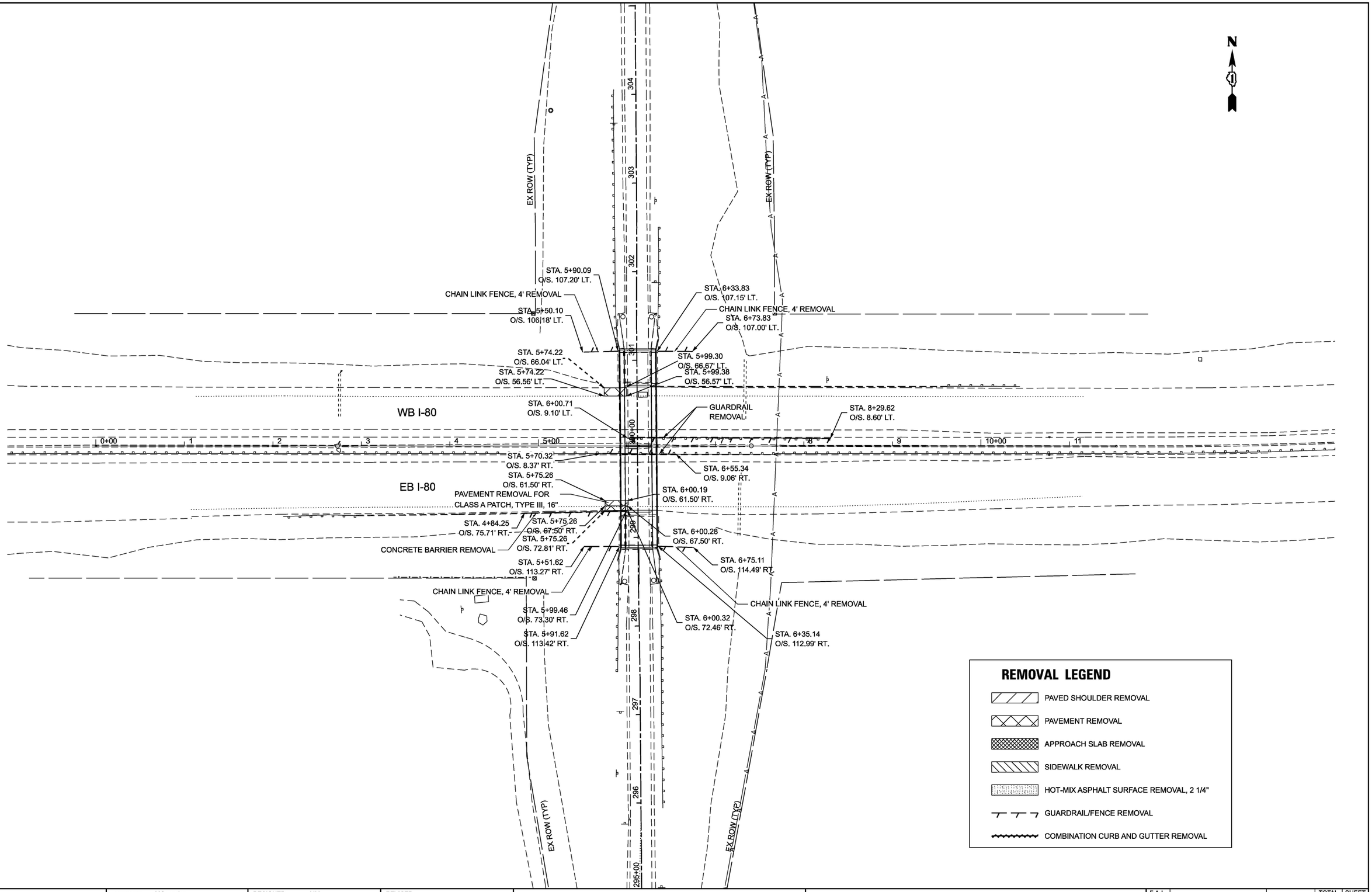

MODEL: Ex I80 CL - Plan 1
FILE NAME: c:\pwworking\primera\pwprod\mgonzalez\dms56232\D162W20-sht-removal.dgn

Primera
650 W. JACKSON BLVD. SUITE 600 . CHICAGO IL 60661 P:312-686-8910 F:312-686-8415

USER NAME = MGonzalez	DESIGNED - MM	REVISED -	
	DRAWN - MM	REVISED -	
	CHECKED - JR	REVISED -	
PLOT DATE = 5/5/2026	DATE - 05/06/2026	REVISED -	

STATE OF ILLINOIS
DEPARTMENT OF TRANSPORTATION

OAK PARK AVENUE OVER I-80
REMOVAL PLAN - I80

SCALE: 1"=50' | SHEET 4 OF 4 SHEETS | STA. -1+00.00 TO STA. 14+00.00

F.A.I RTE.	SECTION	COUNTY	TOTAL SHEETS	SHEET NO.
80	FAI 80 23 Bridge Replacement 2	COOK	158	30
		CONTRACT NO. 62W20		
		ILLINOIS	FED. AID PROJECT	

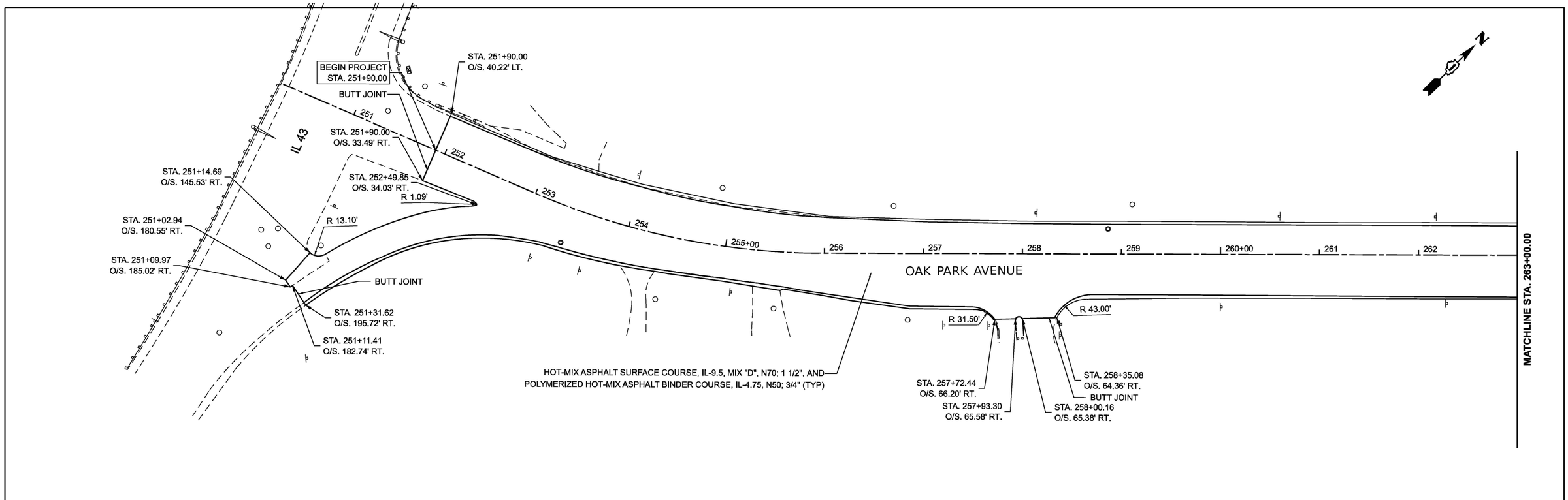

MODEL: Ex Oak Park Ave CL - Plan 1 [Sheet]
FILE NAME: c:\pwworking\primera\pwprod\mgonzalez\dms56232\D162W20-sht-plnprf.dgn

Primera
550 W. JACKSON BLVD. SUITE 600 . CHICAGO IL 60661 P:312-686-0910 F:312-686-0415

USER NAME = mmathews	DESIGNED - MM	REVISED -	
	DRAWN - MM	REVISED -	
	CHECKED - JR	REVISED -	
PLOT DATE = 5/5/2026	DATE - 05/06/2026	REVISED -	

STATE OF ILLINOIS
DEPARTMENT OF TRANSPORTATION

OAK PARK AVENUE OVER I-80
PLAN AND PROFILE

SCALE: 1"=50' | SHEET 1 OF 6 SHEETS | STA. 48+00.00 TO STA. 78+00.00

F.A.I RTE.	SECTION	COUNTY	TOTAL SHEETS	SHEET NO.
80	FAI 80 23 Bridge Replacement 2	COOK	158	31
		CONTRACT NO. 62W20		
		ILLINOIS	FED. AID PROJECT	

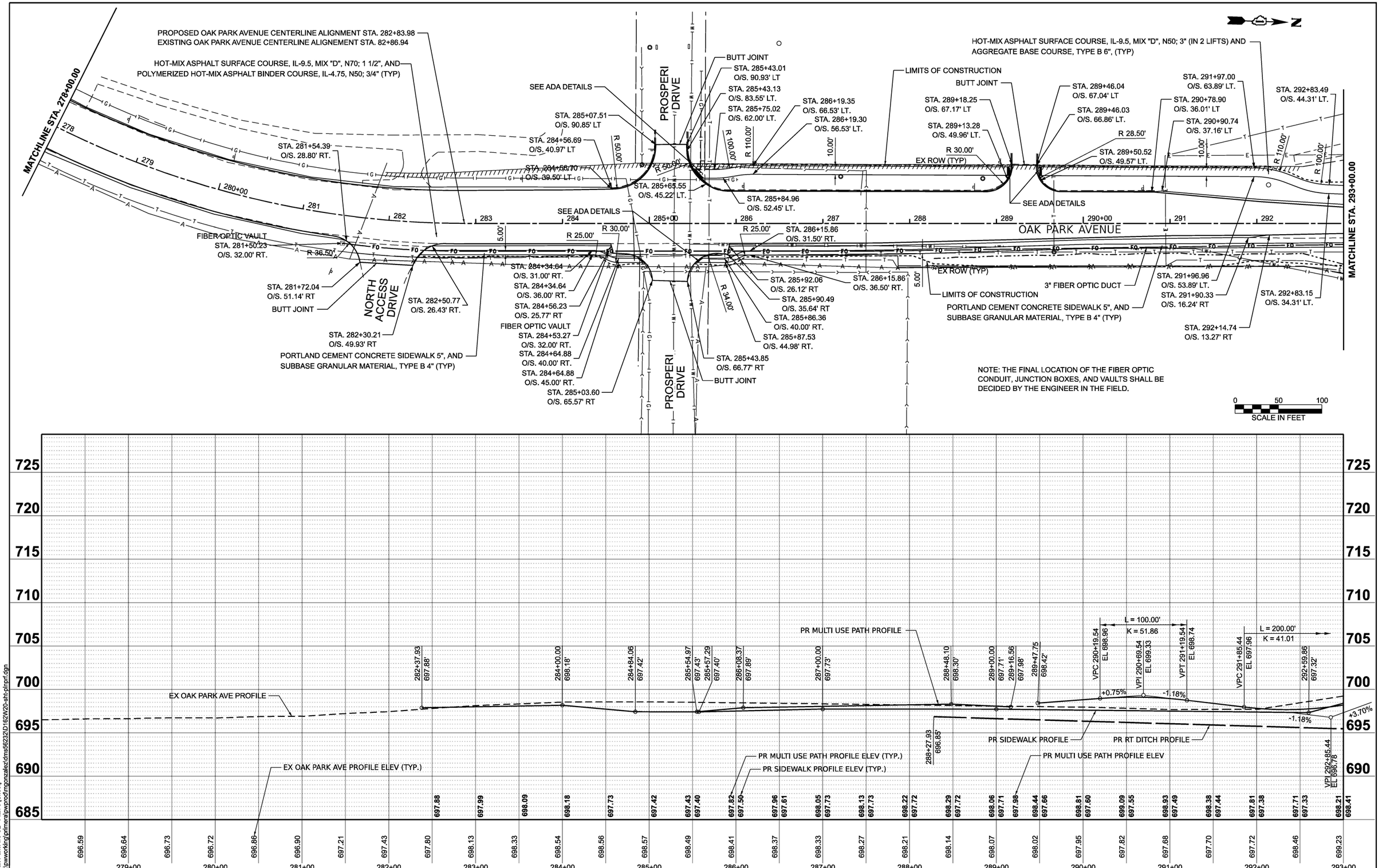

MODEL: PR Oak Park Ave CL - Plan 3 [Sheet]
FILE NAME: c:\pwworking\gtmeral\pwprod\mgonzalez\dms56232\D1t62W20-sht-plnprf.dgn

Primera
650 W. JACKSON BLVD. SUITE 600 CHICAGO IL 60661 P:312-086-0910 F:312-086-0915

USER NAME = MGonzalez	DESIGNED - MM	REVISED -	
	DRAWN - MM	REVISED -	
	CHECKED - JR	REVISED -	
PLOT DATE = 5/5/2026	DATE - 05/06/2026	REVISED -	

STATE OF ILLINOIS
DEPARTMENT OF TRANSPORTATION

OAK PARK AVENUE OVER I-80
PLAN AND PROFILE

SCALE: 1"=50' | SHEET 2 OF 6 SHEETS | STA. 278+00.00 | TO STA. 293+00.00

F.A.I RTE.	SECTION	COUNTY	TOTAL SHEETS	SHEET NO.
80	FAI 80 23 Bridge Replacement 2	COOK	158	32
		CONTRACT NO. 62W20		
	ILLINOIS FED. AID PROJECT			

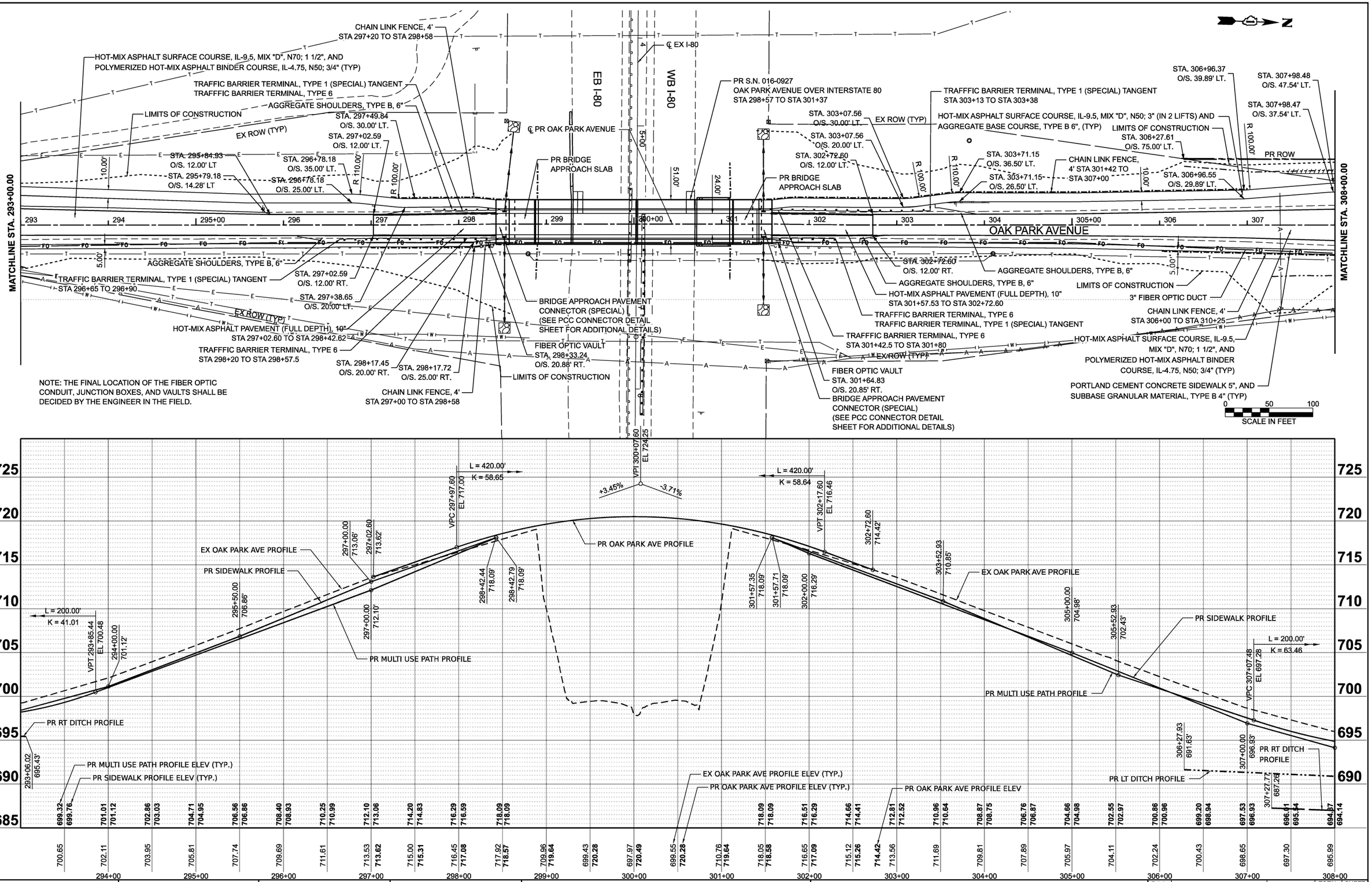

MODEL: PR Oak Park Ave CL - Plan 4 [Sheet]
FILE NAME: c:\pwworking\primera\pwprod\mmathews\dms56223\D1662W20-sht-plnprf.dgn

Primera
650 W. JACKSON BLVD. SUITE 630 CHICAGO IL 60661 P:312-986-0810 F:312-986-0815

USER NAME = mmathews	DESIGNED - MM	REVISED -	
	DRAWN - MM	REVISED -	
	CHECKED - JR	REVISED -	
PLOT DATE = 5/5/2026	DATE - 05/06/2026	REVISED -	

STATE OF ILLINOIS
DEPARTMENT OF TRANSPORTATION

OAK PARK AVENUE OVER I-80
PLAN AND PROFILE

SCALE: 1"=50' | SHEET 3 OF 6 SHEETS | STA. 293+00.00 | TO STA. 308+00.00

F.A.I RTE.	SECTION	COUNTY	TOTAL SHEETS	SHEET NO.
80	FAI 80 23 Bridge Replacement 2	COOK	158	33
		CONTRACT NO. 62W20		
	ILLINOIS FED. AID PROJECT			

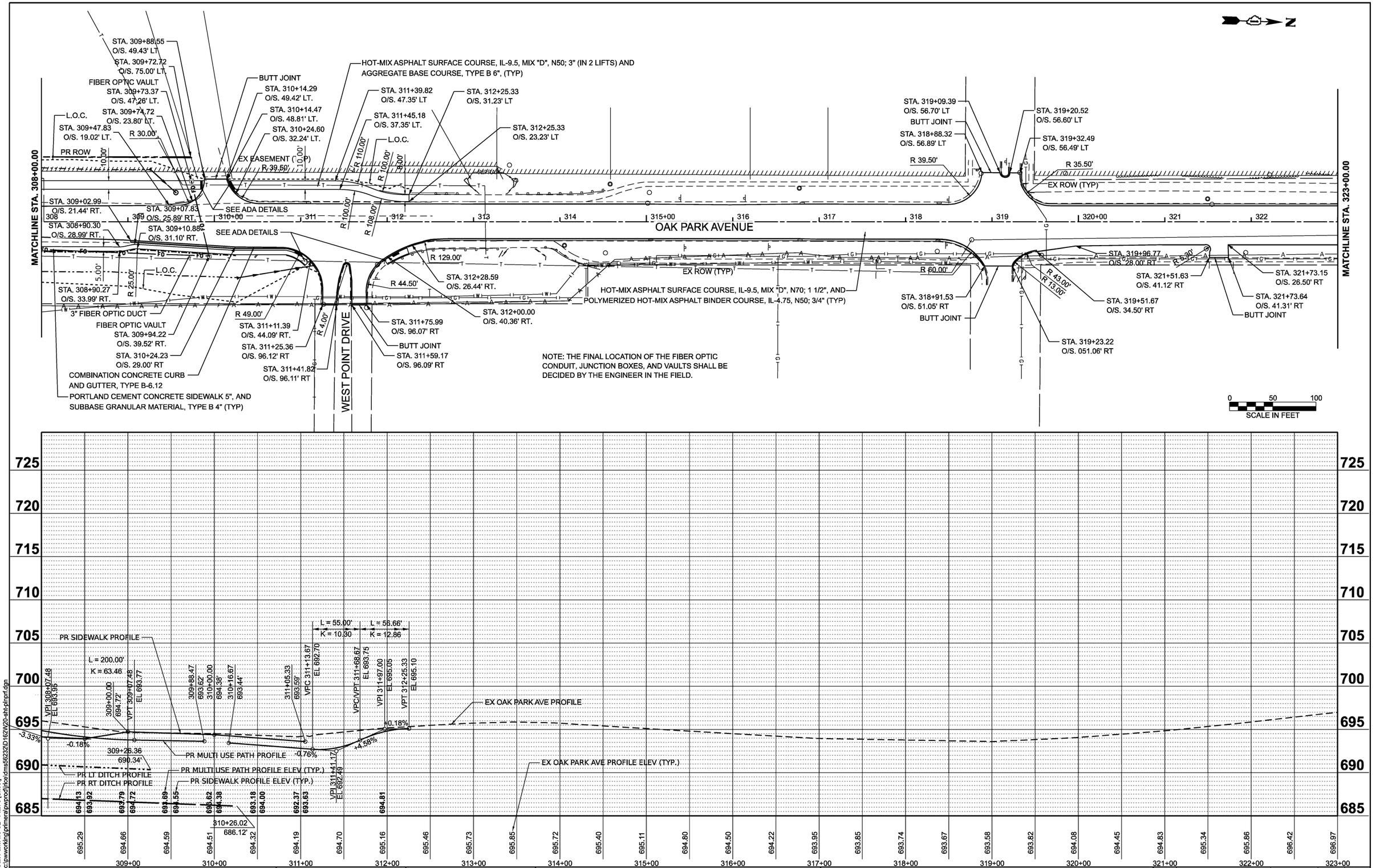

MODEL: PR Oak Park Ave CL - Plan 5 [Sheet]
FILE NAME: c:\pwworking\primera\pwprod\jrice\dms56232\D1162W20-sht-plnprf.dgn

Primera
650 W. JACKSON BLVD. SUITE 630 CHICAGO IL 60661 P:312-986-0810 F:312-986-0815

USER NAME = jrice	DESIGNED - MM	REVISED -	
	DRAWN - MM	REVISED -	
	CHECKED - JR	REVISED -	
PLOT DATE = 5/5/2026	DATE - 05/06/2026	REVISED -	

STATE OF ILLINOIS
DEPARTMENT OF TRANSPORTATION

OAK PARK AVENUE OVER I-80
PLAN AND PROFILE

SCALE: 1"=50' | SHEET 4 OF 6 SHEETS | STA. 308+00.00 | TO STA. 323+00.00

F.A.I RTE.	SECTION	COUNTY	TOTAL SHEETS	SHEET NO.
80	FAI 80 23 Bridge Replacement 2	COOK	158	34
		CONTRACT NO. 62W20		
	ILLINOIS FED. AID PROJECT			

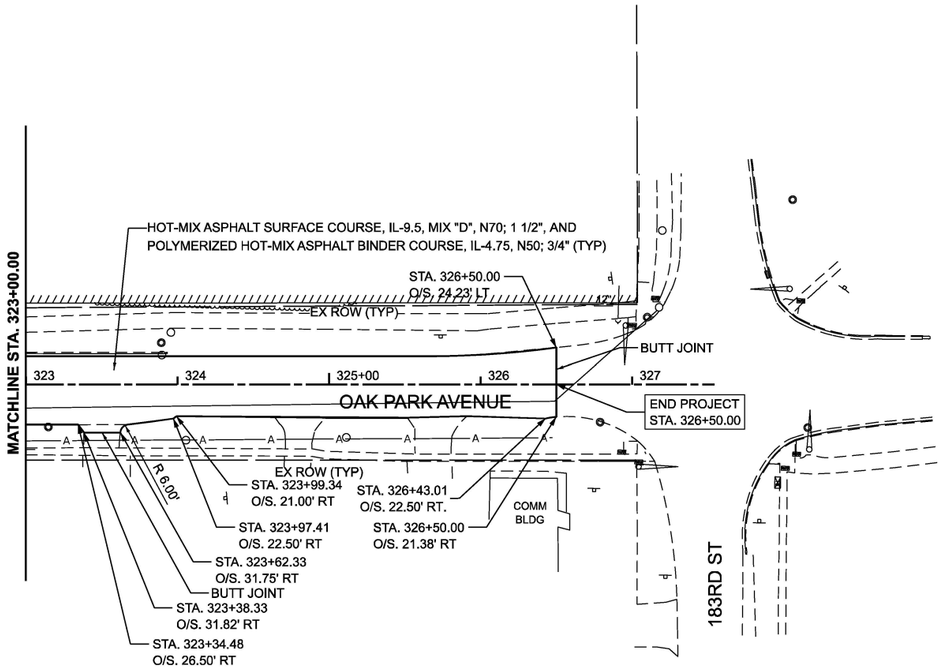





MODEL: PR Oak Park Ave CL-5 - Plan 6 [Sheet]
FILE NAME: c:\pwworking\primera\pwprod\mmathews\dms56232\D162W20-sht-plnprf.dgn

Primera
650 W. JACKSON BLVD. SUITE 600 . CHICAGO IL 60661 P:312-686-0910 F:312-686-0415

USER NAME = mmathews	DESIGNED - MM	REVISED -	
	DRAWN - MM	REVISED -	
	CHECKED - JR	REVISED -	
PLOT DATE = 4/29/2026	DATE - 05/06/2026	REVISED -	

STATE OF ILLINOIS
DEPARTMENT OF TRANSPORTATION

OAK PARK AVENUE OVER I-80
PROPOSED PLAN

SCALE: 1"=50' | SHEET 5 OF 6 SHEETS | STA. 323+00.00 TO STA. 326+50.00

F.A.I RTE.	SECTION	COUNTY	TOTAL SHEETS	SHEET NO.
80	FAI 80 23 Bridge Replacement 2	COOK	158	35
		CONTRACT NO. 62W20		
		ILLINOIS	FED. AID PROJECT	

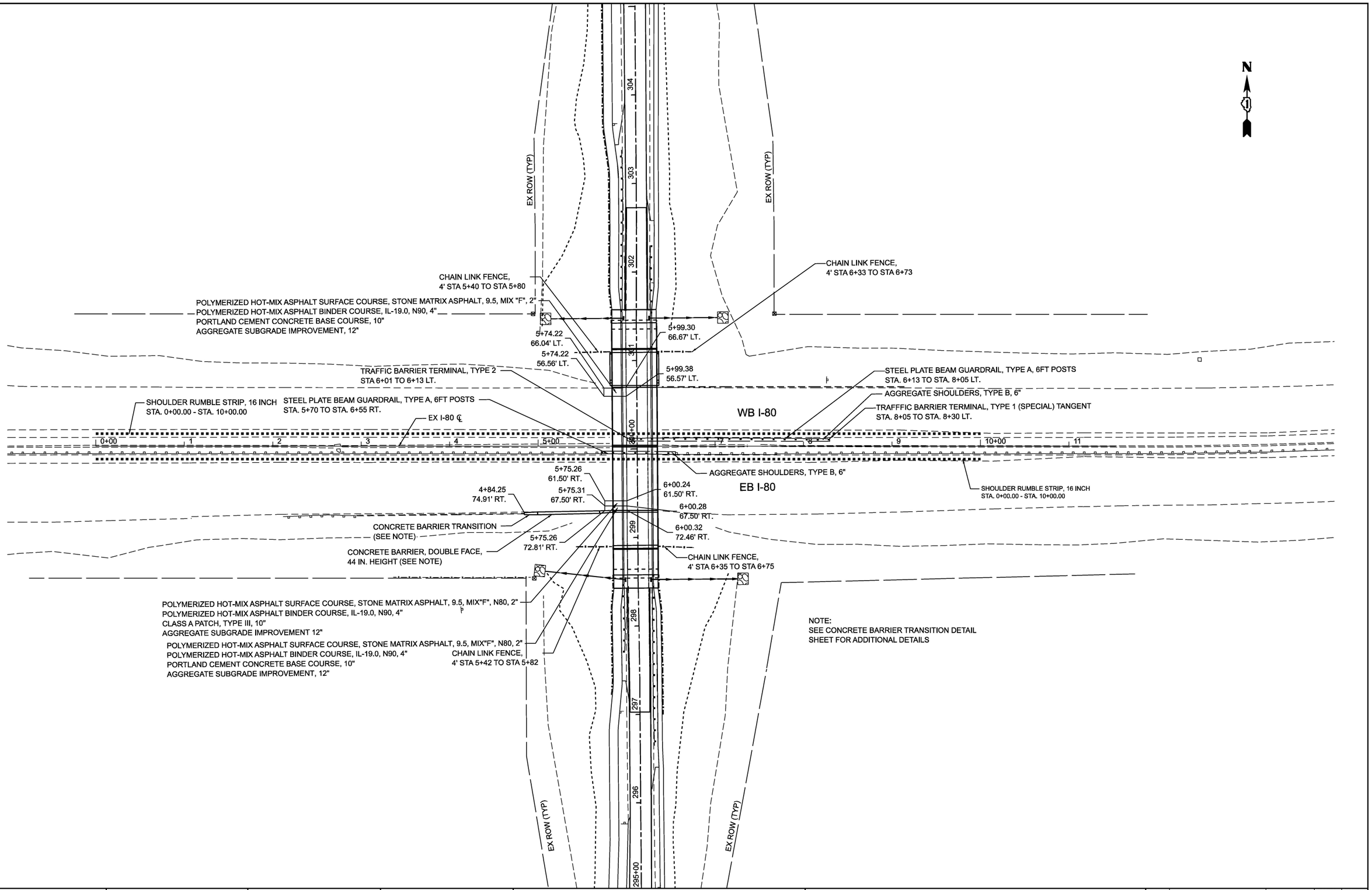

MODEL: Ex I80 CL - Plan 1
FILE NAME: c:\pwworking\primera\pwprod\mmathews\dms56232\D162W20-sht-plnprf.dgn

Primera
600 W. JACKSON BLVD. SUITE 600 . CHICAGO IL 60661 P:312-986-8910 F:312-986-8915

USER NAME = mmathews	DESIGNED - MM	REVISED -	
	DRAWN - MM	REVISED -	
	CHECKED - JR	REVISED -	
PLOT DATE = 5/4/2026	DATE - 05/06/2026	REVISED -	

STATE OF ILLINOIS
DEPARTMENT OF TRANSPORTATION

OAK PARK AVENUE OVER I-80
PROPOSED PLAN - I-80

SCALE: 1"=50' | SHEET 6 OF 6 SHEETS | STA. -1+00.00 | TO STA. 14+00.00

F.A.I RTE.	SECTION	COUNTY	TOTAL SHEETS	SHEET NO.
80	FAI 80 23 Bridge Replacement 2	COOK	158	36
		CONTRACT NO. 62W20		
	ILLINOIS | FED. AID PROJECT			

MAINTENANCE OF TRAFFIC GENERAL NOTES

1. THE REMOVAL OF EXISTING RAISED PAVEMENT LANE MARKER RELFECTORS THAT ARE NOT IN CONFLICT WITH THE MAINTENANCE OF TRAFFIC SHALL BE INCLUDED IN THE COST.

2. THE CONTRACTOR SHALL REMOVE OR COVER ALL EXISTING SIGNS THAT CONFLICT WITH OR DO NOT APPLY THE REVISED TRAFFIC PATTERNS AND SHALL RESTORE THE SIGNS AT THE END OF CONSTRUCTED, AS DIRECTED BY THE ENGINEER. THE REMOVAL AND REINSTALLTAION OF GROUND MOUNTED SIGNS SHALL BE NON-DESTRUCTIVE IN NATURE AND IS INCLUDED IN THE COST OF "TRAFFIC CONTROL AND PROTECTION (SPECIAL) AND "TRAFFIC CONTROL AND PROTECTION (EXPRESSWAYS)".

3. ALL CONTRACTOR SUPPLIED TRAFFIC CONTROL DEVICES AND SIGNS SHALL BE IN GOOD CONDITION AND SHALL BE SUBJECT TO APPROVAL BY THE ENGINEER.

4. THE CONTRACTOR SHALL BE RESPONSIBLE FOR AND SHALL REPLACE ANY SIGNS THAT ARE SUPPLIED BY OTHERS AND DAMAGED BY THE CONTRACTORS WORK FORCE OR SUBCONTRACTORS DURING RELOCATION OR CONSTRUCTION OPERATIONS.

5. TRAFFIC CONDITIONS, ACCIDENTS, AND OTHER UNFORSEEN CIRCUMSANCES MAY REQUIRE THE ENGINEER TO RESTRICT, MODIFY, OR REMOVE LANE CLOSURES OR REPAIR EXISTING TRAFFIC CONTROL. THE CONTRACTOR SHALL MAKE THE NECESSARY ADJUSTMENTS AS DIRECTED BY THE ENGINEER WITHOUT DELAY. THE CONTRACTOR SHALL RESPOND WITHIN 30 MINUTES FROM THE TIME OF NOTIFICATION BY THE ENGINEER TO ANY REQUEST MADE BY THE ENGINEER FOR CORRECTION.

6. PRIOR TO REMOVING TRAFFIC CONTROL AND OPENING CLOSED PAVEMENT AREAS TO TRAFFIC, THE CONTRACTOR SHALL SWEEP THE PAVEMENT SURFACE CLEAN TO THE SATISFACTION OF THE ENGINEER. THIS WORK WILL NOT BE PAID FOR SEPARATLY BUT SHALL BE INCLUDED IN THE COST FOR TRAFFIC CONTROL AND PROTECTION"PAY ITEM.

7. POSITIVE DRAINAGE SHALL BE MAINTAINED AT ALL TIMES DURING CONSTRUCTION.

8. EXISTING OR TEMPORARY PAVEMENT MARKINGS REMOVED AS A RESULT OF HMA SURFACE REMOVAL OR PAVEMENT REMOVAL WILL NOT BE PAID FOR SEPARATLY.

9. CONFLICTING PAVEMENT MARKINGS SHALL BE CONSIDERED ANY PAVEMENT MARKING WITHIN SIX (6) FEET OF THE TRAVELED LANES, UNLESS DIRECTED BY THE ENGINEER.

10. THE "ROAD CONSTRUCTION AHEAD" SIGNS SHALL REMAIN INSTALLED UNTIL THE COMPLETION OF THE PROJECT OR WHEN NO ROADWAY HAZARDS REMAIN WITHIN THE WORK ZONE.

11. DETOUR SIGNAGE TO BE CONSIDERED INCLUDED IN THE COST FOR TEMPORARY TRAFFIC CONTROL AND PROTECTION (SPECIAL) EXCEPT AS OTHERWISE NOTED.

12. THE CONTRACTOR SHALL NOT OBSTRUCT ANY EXISTING SIGN WITH THE PLACEMENT OF DETOUR SIGNAGE.

13. SEE DETAIL TC-21 FOR TYPICAL SIGN SPACING.

14. TEMPORARY TRAFFIC SIGNAL TIMING TO BE ENACTED ALONG THE DETOUR ROUTE AT THE NOTED INTERSECTIONS.

15. A MINIMUM OF FOURTEEN (14) DAYS IN ADVANCE OF THE BRIDGE CLOSURE, THE CONTRACTOR SHALL PLACE ONE (1) ARTERIAL ROAD INFORMATION SIGN AT EACH END OF THE PROJECT ALONG OAK PARK AVE AS DIRECTED AND AT A LOCATION DESIGNATED BY THE ENGINEER TO INFORM MOTORISTS OF THE UPCOMING CLOSURE. THIS WORK SHALL BE PAID FOR AT THE CONTRACT UNIT PRICE FOR TEMPORARY INFORMATION SIGNING.

16. THE CONTRACTOR SHALL REQUEST AND GAIN THE APPROVAL FROM THE ILLINOIS DEPARTMENT OF TRANSPORTATION'S EXPRESSWAY TRAFFIC OPERATIONS ENGINEER AT WWW.IDOTLCY.COM SEVENTY CLOSURES. THIS ADVANCE NOTIFICATION IS CALCULATED BASED ON WORKWEEK OF MONDAY THROUGH FRIDAY AND SHALL NOT INCLUDE WEEKENDS OR HOLIDAYS.

17. A MAINTENANCE OF TRAFFIC PLAN SHALL BE SUBMITTED TO THE DISTRICT ON EXPRESSWAY TRAFFIC CONTROL SUPERVISOR 14 DAYS IN ADVANCE OF ANY STAGES CHANGES OR FULL EXPRESSWAY CLOSURES. THE MAINTENANCE OF TRAFFIC PLAN SHALL INCLUDE, BUT NOT BE LIMITED TO: LAND AND RAMP CLOSURES, EXISTING GEOMETRIC'S, AND EQUIPMENT AND MATERIAL LOCATION."

18. THE PAY ITEM "BARRIER WALL REFLECTORS, TYPE C" IS INTENDED TO BE SUED FOR REFLECTOR APPLICATION ON PERMANENT AND EXISTING CONCRETE BARRIER AND IS NOT TO BE USED FOR TEMPORARY CONCRETE BARRIER WHERE THE TYPE C REFLECTOR IS THE TYPE C REFLECTOR IS CONSIDERED INCLUDED IN THE COST OF THE TEMPORARY CONCRETE BARRIER PER HIGHWAY STANDARD 704001.

SUGGESTED SEQUENCE OF CONSTRUCTION

PRE-STAGE:
I-80
UTILIZE HIGHWAY STANDARDS 701400 AND 701401, IN ACCORDANCE WITH KEEPING THE EXPRESSWAY OPEN TO TRAFFIC SPECIAL PROVISION, TO REMOVE THE EXISTING INSIDE SHOULER RUMBLE STRIPS, AS SHOWN IN THE PLANS.
CONTRACTOR SHALL USE TC-09 FOR SHIFTING TRAFFIC INTO STAGE 1 AND INTO STAGE 2.

STAGE 1:
OAK PARK AVENUE:
INSTALL DETOUR SIGNING IN ACCORDACE WITH THE DETOUR PLAN. COVER DETOUR SIGNS UNTIL DETOUR IS IMPLEMENTED IN STAGE 1. CONSTRUCT THE ROADWAY, GUARDRAIL, MULTI-USE PATH, SIDEWALK, AND ALL OTHER COLLATERAL WORK REQUIRED TO COMPLETE THE ROADWAY ITEMS.

I-80:
UTILIZE HIGHWAY STANDARDS 701400, 701401, 701446, AND TC-17 DURING ALLOWABLE LANE CLOSURE HOURS, IN ACCORDANCE WITH KEEPING THE EXPRESSWAY OPEN TO TRAFFIC SPECIAL PROVISION, TO REMOVE THE EXISTING OAK PARK AVENUE SUPERSTRUCTURE AND EXISTING PROTECTIVE SHIELD.

15 MINUTE MAXIMUM FULL CLOSURES WILL BE PERMITTED, IN ACCORDANCE WITH KEEPING THE EXPRESSWAY OPEN TO TRAFFIC SPECIAL PROVISION, TO REMOVE THE EXISTING BEAMS.

UTILIZE HIGHWAY STANDARDS 701400, 701401, 701446, AND TC-17 DURING ALLOWABLE LANE CLOSURE HOURS (AS DEFINED IN KEEPING THE EXPRESSWAY OPEN TO TRAFFIC SPECIAL PROVISION) SHIFT EASTBOUND AND WESTBOUND I-80 TRAFFIC INTO STAGE 1B TRAFFIC CONFIGURATION.

STAGE 1A:
I-80:
UTILIZE HIGHWAY STANDARDS 701400 AND 701401, IN ACCORDANCE WITH KEEPING THE EXPRESSWAY OPEN TO TRAFFIC SPECIAL PROVISION, TO REMOVE THE EXISTING OUTSIDE SHOULER RUMBLE STRIPS, AS SHOWN IN THE PLANS.

STAGE 1B:
I-80:
SHIFT EASTBOUND AND WESTBOUND TRAFFIC IN ACCORDANCE WITH THE STAGE 1B PLANS AND DISTRICT STANDARD TC-09.
CONSTRUCT THE NORTH AND SOUTH PIER WIDENING AND PERFORM THE STRUCTURAL REPAIRS, AS SHOWN IN THE PLANS.

STAGE 2A:
I-80:
SHIFT WESTBOUND TRAFFIC IN ACCORDANCE WITH THE STAGE 2A PLANS AND DISTRICT STANDARD TC-09,
MAINTENANCE EASTBOUND TRAFFIC IN ACCORDANCE WITH THE STAGE 1B PLANS AND DISTRICT STANDARD TC-09.
REMOVE THE EXISTING GUARDRAIL, CONSTRUCT THE CENTER PIER WIDENING, PERFORM THE STRUCTURAL REPAIRS, AND INSTALL THE PROPOSED MEDIAN GUARDRAIL, AS SHOWN IN THE PLANS.

I-80:
UTILIZE HIGHWAY STANDARDS 701400, 701401, 701446, AND TC-17 DURING ALLOWABLE LANE CLOSURE HOURS, IN ACCORDANCE WITH KEEPING THE EXPRESSWAY OPEN TO TRAFFIC SPECIAL PROVISION, TO SHIFT EASTBOUND AND WESTBOUND TRAFFIC INTO THE PRECONSTRCTION TRAFFIC CONFIGURATION, WITH PERMANENT PAVEMENT MARKINGS.

STAGE 2B:
OAK PARK AVENUE:
CONTINUE UTILIZING THE DETOUR AS SHOWN IN THE DETOUR PLANS. ERECT THE STRUCTURAL STEEL, CONSTRUCT THE NEW SUPERSTRUCTURE, NORTH AND SOUTH APPROACH SLABS.

PERFORM FINAL LANDSCAPING, PAVEMENT MARKINGS, PUNCHLIST, ALL OTHER COLLATERAL WORK REQUIRED TO COMPLETE THE CONTRACT. REMOVE DETOUR ONCE ALL SUBSTANSIAL WORK IS COMPLETED, OR AS DIRECTED BY THE ENGINEER.

I-80:
UTILIZE HIGHWAY STANDARDS 701400, 701401, 701446, AND TC-17 DURING ALLOWABLE LANE CLOSURE HOURS, IN ACCORDANCE WITH KEEPING THE EXPRESSWAY OPEN TO TRAFFIC SPECIAL PROVISION, TO REPLACE RUMBLE STRIPS, INSTALL AND REMOVE PROTECTIVE SHIELD AND ALL OTHER COLLATERAL REQUIRED TO COMPLETE THE SUPERSTRUCTURE.

MODEL: D162W20-sht-gennote.MOT [Sheet]
FILE NAME: c:\pwworking\primera\pwprod\tnguyen2\dms562321\D162W20-sht-gennote.MOT.dgn

MILLENNIA PROFESSIONAL SERVICES www.millennia.pro

USER NAME = tnguyen	DESIGNED - TVN	REVISED -	
	DRAWN - JP/SKP	REVISED -	
	CHECKED - TW	REVISED -	
PLOT DATE = 5/5/2026	DATE - 05/06/2026	REVISED -	

STATE OF ILLINOIS
DEPARTMENT OF TRANSPORTATION

OAK PARK AVENUE OVER I-80
SUGGESTED STAGES OF CONSTRUCTION AND TRAFFIC CONTROL PLAN

SCALE: | SHEET 1 OF 8 SHEETS | STA. N/A | TO STA. N/A

F.A.I RTE.	SECTION	COUNTY	TOTAL SHEETS	SHEET NO.
80	FAI 80 23 Bridge Replacement 2	COOK	158	37
		CONTRACT NO. 62W20		
	ILLINOIS	FED. AID PROJECT		

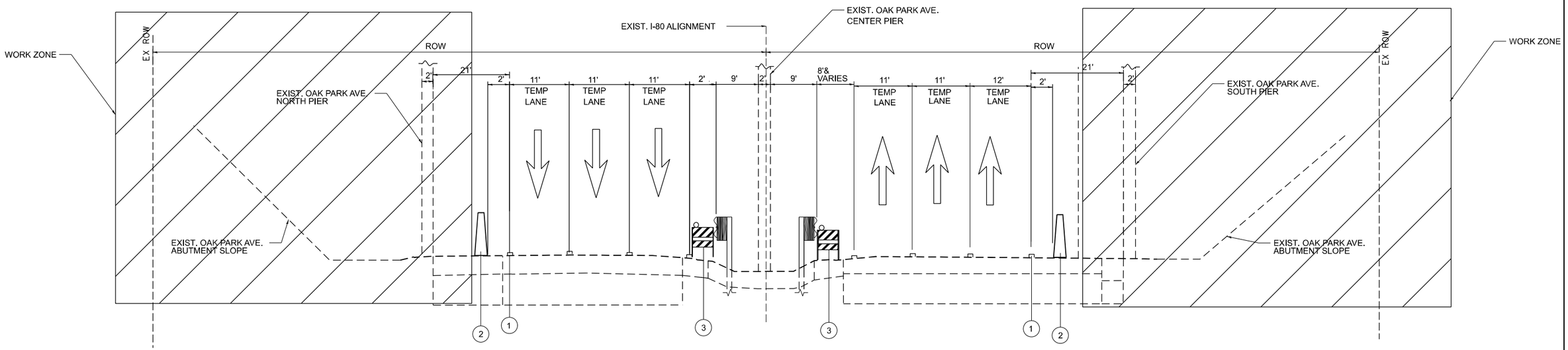

I-80 STAGE 1-B EAST&WESTBOUND MOT CONCEPT
(LOOKING EAST)

WESTBOUND TAPER LENGTH
FROM 12', 12', 12' TO 11', 11', 11' STA. 11+08.74 - STA. 16+99.99
FROM 11', 11', 11' TO 12', 12', 12' STA. 20+00.23 - STA. 25+09.53

AT OAK PARK AVE.
(EASTBOUND: 17+01.31 - 20+00.05
WESTBOUND: 16+99.99 - 20+00.23)

EASTBOUND TAPER LENGTH
FROM 12', 12', 12' TO 11', 11', 12' STA. 15+62.16 - STA. 17+01.31
FROM 11', 11', 12' TO 12', 12', 12' STA. 20+00.05 - STA. 21+60.10

(1) PAVEMENT MARKING TAPE
(2) TEMPORARY CONCRETE BARRIER WALL
(3) DRUM OR TYPE II BARRICADE

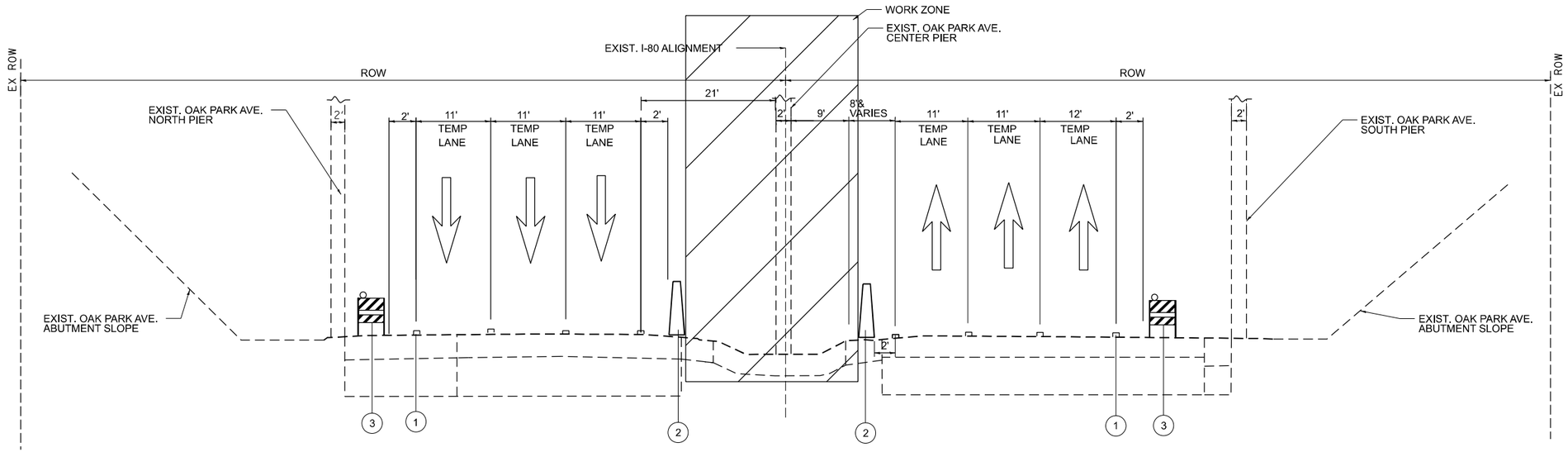

I-80 STAGE 2-A EAST&WESTBOUND MOT CONCEPT
(LOOKING EAST)

WESTBOUND TAPER LENGTH
FROM 12', 12', 12' TO 11', 11', 11' STA. 14+64.47 - STA. 15+98.12
FROM 11', 11', 11' TO 12', 12', 12' STA. 19+35.65 - STA. 20+53.35

AT OAK PARK AVE.
(WESTBOUND: 15+98.12 - 19+35.65)

NOTE: (STAGE 2-A)
EASTBOUND PAYMENT MARKING REMAINS THE SAME AS 1B

(1) PAVEMENT MARKING TAPE
(2) TEMPORARY CONCRETE BARRIER WALL
(3) DRUM OR TYPE II BARRICADE

MODEL: D162W20-sht-typical-staging 01 [Sheet]
FILE NAME: c:\pwworking\primera\pwprod\tnguyen2\dms56232\D162W20-sht-typical-staging.dgn

MILLENNIA PROFESSIONAL SERVICES
www.millennia.pro

USER NAME = tnguyen	DESIGNED - TVN	REVISED -	
	DRAWN - JP/SKP	REVISED -	
	CHECKED - TW	REVISED -	
PLOT DATE = 5/5/2026	DATE - 05/06/2026	REVISED -	

STATE OF ILLINOIS
DEPARTMENT OF TRANSPORTATION

OAK PARK AVENUE OVER I-80
SUGGESTED STAGES OF CONSTRUCTION AND TRAFFIC CONTROL PLAN

SCALE: 1"=5' | SHEET 2 OF 8 SHEETS | STA. | TO STA.

F.A.I RTE.	SECTION	COUNTY	TOTAL SHEETS	SHEET NO.
80	FAI 80 23 Bridge Replacement 2	COOK	158	38
		CONTRACT NO. 62W20		
	ILLINOIS FED. AID PROJECT			

LEGEND

- CONSTRUCTION SIGN
- TYPE II BARRICADES OR DRUMS AT 50' CENTERS ALONG TANGENTS AND 25' CENTERS ALONG TAPERS AND RAMPS ON SIBLEY BLVD. (100' CENTERS ALONG TANGENTS AND 50' CENTERS ALONG TAPERS ON I-80) (WITH STEADY BURN LIGHT IN TAPERS, AND GORES) (NO LIGHTS IN TANGENTS ON I-80)
- DIRECTIONAL BARRICADE WITH STEADY BURN MONO-DIRECTIONAL LIGHT AT 20' CENTERS
- ARROW BOARD
- DIRECTION OF TRAFFIC
- TYPE III BARRICADE W/ FLASHING LIGHTS
- FLASHING AMBER BEACON
- TEMPORARY CONCRETE BARRIER WALL
- WORK ZONE
- IMPACT ATTENUATOR

1. PAVEMENT MARKING TAPE, TYPE IV 4", SOLID WHITE LINE
2. PAVEMENT MARKING TAPE, TYPE IV 4", SOLID YELLOW LINE
3. PAVEMENT MARKING TAPE, TYPE IV 6", 2' DASH - 6' SKIP WHITE
4. PAVEMENT MARKING TAPE, TYPE IV 8", SOLID WHITE LINE
5. PAVEMENT MARKING TAPE, TYPE IV 12", SOLID WHITE LINE

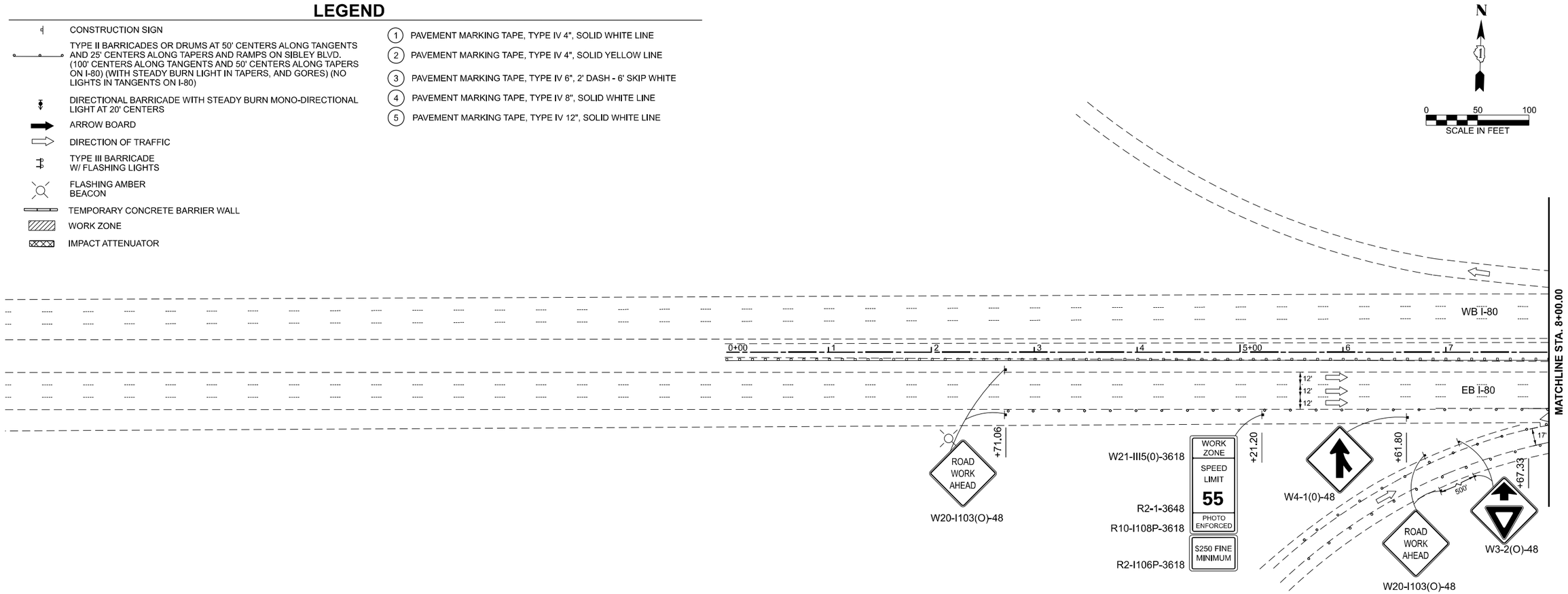

MODEL: D162W20-sht-staging 01
FILE NAME: c:\pw\working\primeral\pwprod\tnguyen2\dms56232\D162W20-sht-staging1_01.dgn

MILLENNIA PROFESSIONAL SERVICES
www.millennia.pro

USER NAME = tnguyen	DESIGNED - TVN	REVISED -	STATE OF ILLINOIS DEPARTMENT OF TRANSPORTATION	OAK PARK AVENUE OVER I-80 SUGGESTED STAGES OF CONSTRUCTION - STAGE 1B
	DRAWN - JP/SKP	REVISED -		
	CHECKED - TW	REVISED -		
PLOT DATE = 5/5/2026	DATE - 05/06/2026	REVISED -		SCALE: 1"=50' SHEET 3 OF 8 SHEETS STA. 0+00.00 TO STA. 8+00.00

F.A.I RTE.	SECTION	COUNTY	TOTAL SHEETS	SHEET NO.
80	FAI 80 23 Bridge Replacement 2	COOK	158	39
		CONTRACT NO. 62W20		
	ILLINOIS FED. AID PROJECT			

LEGEND

- CONSTRUCTION SIGN
- TYPE II BARRICADES OR DRUMS AT 50' CENTERS ALONG TANGENTS AND 25' CENTERS ALONG TAPERS AND RAMPS ON SIBLEY BLVD. (100' CENTERS ALONG TANGENTS AND 50' CENTERS ALONG TAPERS ON I-80) (WITH STEADY BURN LIGHT IN TAPERS, AND GORES) (NO LIGHTS IN TANGENTS ON I-80)
- DIRECTIONAL BARRICADE WITH STEADY BURN MONO-DIRECTIONAL LIGHT AT 20' CENTERS
- ARROW BOARD
- DIRECTION OF TRAFFIC
- TYPE III BARRICADE W/ FLASHING LIGHTS
- FLASHING AMBER BEACON
- TEMPORARY CONCRETE BARRIER WALL
- WORK ZONE
- IMPACT ATTENUATOR

1. PAVEMENT MARKING TAPE, TYPE IV 4", SOLID WHITE LINE
2. PAVEMENT MARKING TAPE, TYPE IV 4", SOLID YELLOW LINE
3. PAVEMENT MARKING TAPE, TYPE IV 6", 2' DASH - 6' SKIP WHITE
4. PAVEMENT MARKING TAPE, TYPE IV 8", SOLID WHITE LINE
5. PAVEMENT MARKING TAPE, TYPE IV 12", SOLID WHITE LINE

N

0 50 100
SCALE IN FEET

MATCHLINE STA. 8+00.00

MATCHLINE STA. 23+00.00

END ROAD WORK
G20-I103-6036

+00.00

+08.74

POT STA 0+00.00

SHOULDER RUMBLE STRIP REMOVAL / REPLACE
STA. 11+00.00 - STA. 22+00.00

WB I-80

591.25' TAPER

+99.99

EB I-80

139.15' TAPER

1:12 TAPER

+72.14

+00.23

WI-6PRO-6030
ABOVE TYP III BAR.

1:12 TAPER

1:55 TAPER (509.30')

160.05' TAPER

+60.10

+00.05

SHOULDER RUMBLE STRIP
REMOVAL / REPLACE
STA. 11+00.00 - STA. 22+00.00

+67.33

R1-2-48

+53.40

R1-2-48

R1-2-48

W21-III5(0)-3618

WORK ZONE
SPEED LIMIT
55
PHOTO ENFORCED

R2-1-3648

R10-I108P-3618

$250 FINE MINIMUM

R2-I106P-3618

+62.16

+26.24

+01.31

WI-6PRO-6030
ABOVE TYP III BAR.

OAK PARK AVE

303 183 302 182 6+12.76 298 297

10+00 15+00 20+00

PI STA 100+00.00

MODEL: D162W20-shl-staging 02
FILE NAME: c:\pwworking\primera\pwprod\lnguyen2\dms56232\D162W20-shl-staging1_02.dgn

MILLENNIA PROFESSIONAL SERVICES
www.millennia.pro

USER NAME = lnguyen	DESIGNED - TVN	REVISED -	
	DRAWN - JP/SKP	REVISED -	
	CHECKED - TW	REVISED -	
PLOT DATE = 5/5/2026	DATE - 05/06/2026	REVISED -	

STATE OF ILLINOIS
DEPARTMENT OF TRANSPORTATION

OAK PARK AVENUE OVER I-80
SUGGESTED STAGES OF CONSTRUCTION - STAGE 1B

SCALE: 1"=50' | SHEET 4 OF 8 SHEETS | STA. 8+00.00 | TO STA. 23+00.00

F.A.I RTE.	SECTION	COUNTY	TOTAL SHEETS	SHEET NO.
80	FAI 80 23 Bridge Replacement 2	COOK	158	40
		CONTRACT NO. 62W20		
	ILLINOIS FED. AID PROJECT			

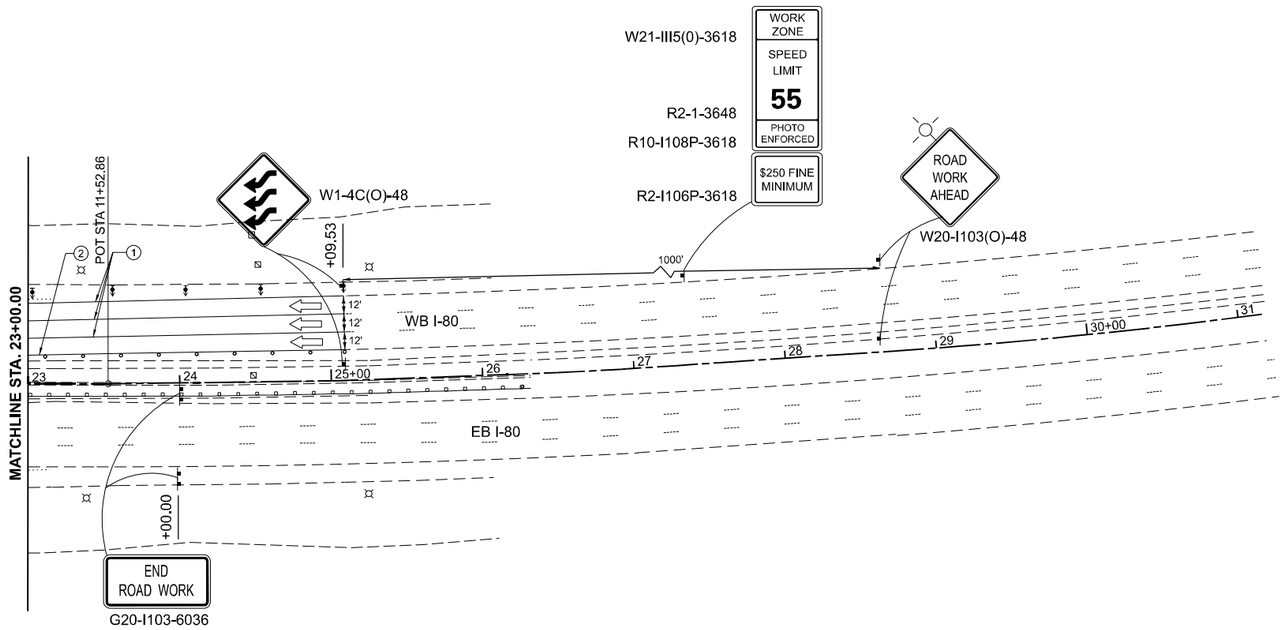

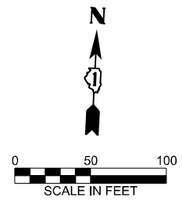

LEGEND

- CONSTRUCTION SIGN
- TYPE II BARRICADES OR DRUMS AT 50' CENTERS ALONG TANGENTS AND 25' CENTERS ALONG TAPERS AND RAMPS ON SIBLEY BLVD. (100' CENTERS ALONG TANGENTS AND 50' CENTERS ALONG TAPERS ON I-80) (WITH STEADY BURN LIGHT IN TAPERS, AND GORES) (NO LIGHTS IN TANGENTS ON I-80)
- DIRECTIONAL BARRICADE WITH STEADY BURN MONO-DIRECTIONAL LIGHT AT 20' CENTERS
- ARROW BOARD
- DIRECTION OF TRAFFIC
- TYPE III BARRICADE W/ FLASHING LIGHTS
- FLASHING AMBER BEACON
- TEMPORARY CONCRETE BARRIER WALL
- WORK ZONE
- IMPACT ATTENUATOR

1. PAVEMENT MARKING TAPE, TYPE IV 4", SOLID WHITE LINE
2. PAVEMENT MARKING TAPE, TYPE IV 4", SOLID YELLOW LINE
3. PAVEMENT MARKING TAPE, TYPE IV 6", 2' DASH - 6' SKIP WHITE
4. PAVEMENT MARKING TAPE, TYPE IV 8", SOLID WHITE LINE
5. PAVEMENT MARKING TAPE, TYPE IV 12", SOLID WHITE LINE

MODEL: D162W20-sht-staging 03
FILE NAME: c:\pw working\primera\pwprod\fnguyen2\dms56232\D162W20-sht-staging1_03.dgn

MILLENNIA PROFESSIONAL SERVICES
www.millennia.pro

USER NAME = skprabhakara	DESIGNED - TVN	REVISED -	
	DRAWN - JP/SKP	REVISED -	
	CHECKED - TW	REVISED -	
PLOT DATE = 4/30/2026	DATE - 05/06/2026	REVISED -	

STATE OF ILLINOIS
DEPARTMENT OF TRANSPORTATION

OAK PARK AVENUE OVER I-80
SUGGESTED STAGES OF CONSTRUCTION - STAGE 1B

SCALE: 1"=50' | SHEET 5 OF 8 SHEETS | STA. 23+00.00 | TO STA. 36+00.00

F.A.I RTE.	SECTION	COUNTY	TOTAL SHEETS	SHEET NO.
80	FAI 80 23 Bridge Replacement 2	COOK	158	41
		CONTRACT NO. 62W20		
	ILLINOIS	FED. AID PROJECT		

LEGEND

- CONSTRUCTION SIGN
- TYPE II BARRICADES OR DRUMS AT 50' CENTERS ALONG TANGENTS AND 25' CENTERS ALONG TAPERS AND RAMPS ON SIBLEY BLVD. (100' CENTERS ALONG TANGENTS AND 50' CENTERS ALONG TAPERS ON I-80) (WITH STEADY BURN LIGHT IN TAPERS, AND GORES) (NO LIGHTS IN TANGENTS ON I-80)
- DIRECTIONAL BARRICADE WITH STEADY BURN MONO-DIRECTIONAL LIGHT AT 20' CENTERS
- ARROW BOARD
- DIRECTION OF TRAFFIC
- TYPE III BARRICADE W/ FLASHING LIGHTS
- FLASHING AMBER BEACON
- TEMPORARY CONCRETE BARRIER WALL
- WORK ZONE
- IMPACT ATTENUATOR

1. PAVEMENT MARKING TAPE, TYPE IV 4", SOLID WHITE LINE
2. PAVEMENT MARKING TAPE, TYPE IV 4", SOLID YELLOW LINE
3. PAVEMENT MARKING TAPE, TYPE IV 6", 2' DASH - 6' SKIP WHITE
4. PAVEMENT MARKING TAPE, TYPE IV 8", SOLID WHITE LINE
5. PAVEMENT MARKING TAPE, TYPE IV 12", SOLID WHITE LINE

N

0 50 100
SCALE IN FEET

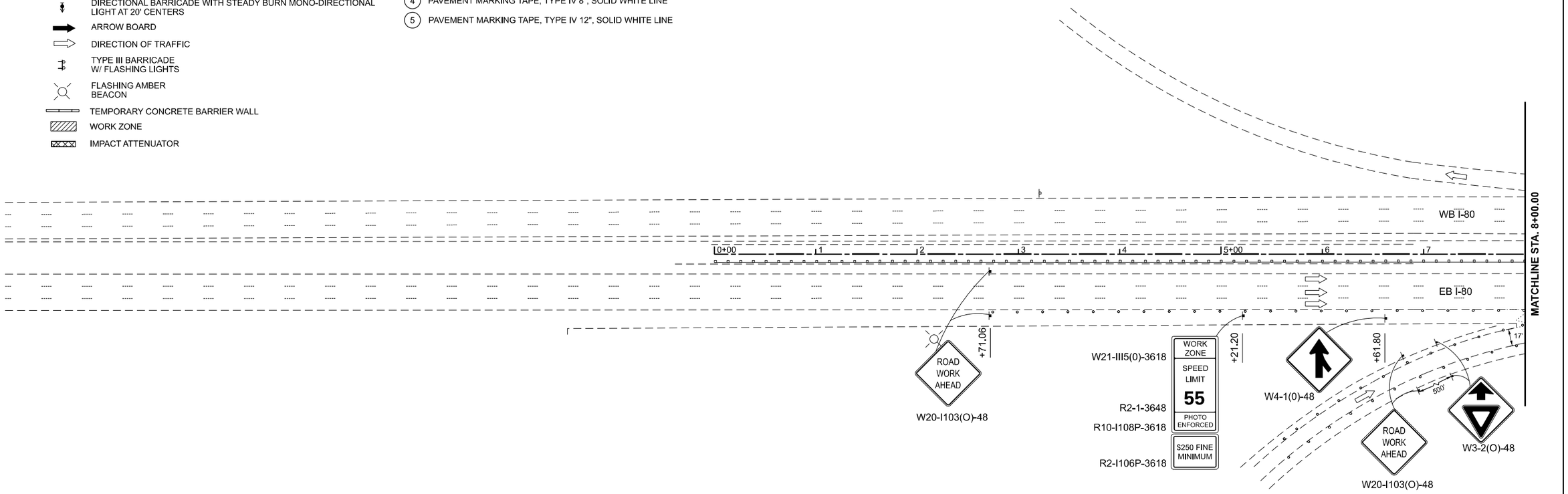

MODEL: D162W20-sht-staging 2.1
FILE NAME: c:\pw\working\jpmiera\pwprod\nguyen2\dms56232\D162W20-sht-staging2_01.dgn

MILLENNIA PROFESSIONAL SERVICES
www.millennia.pro

USER NAME = Inguyen	DESIGNED - TVN	REVISED -	
	DRAWN - JP/SKP	REVISED -	
	CHECKED - TW	REVISED -	
PLOT DATE = 5/5/2026	DATE - 05/06/2026	REVISED -	

STATE OF ILLINOIS
DEPARTMENT OF TRANSPORTATION

OAK PARK AVENUE OVER I-80
SUGGESTED STAGES OF CONSTRUCTION - STAGE 2A

SCALE: 1"=50' | SHEET 6 OF 8 SHEETS | STA. 0+00.00 | TO STA. 8+00.00

F.A.I RTE.	SECTION	COUNTY	TOTAL SHEETS	SHEET NO.
80	FAI 80 23 Bridge Replacement 2	COOK	158	42
		CONTRACT NO. 62W20		
	ILLINOIS FED. AID PROJECT			

LEGEND

- CONSTRUCTION SIGN
- TYPE II BARRICADES OR DRUMS AT 50' CENTERS ALONG TANGENTS AND 25' CENTERS ALONG TAPERS AND RAMPS ON SIBLEY BLVD. (100' CENTERS ALONG TANGENTS AND 50' CENTERS ALONG TAPERS ON I-80) (WITH STEADY BURN LIGHT IN TAPERS, AND GORES) (NO LIGHTS IN TANGENTS ON I-80)
- DIRECTIONAL BARRICADE WITH STEADY BURN MONO-DIRECTIONAL LIGHT AT 20' CENTERS
- ARROW BOARD
- DIRECTION OF TRAFFIC
- TYPE III BARRICADE W/ FLASHING LIGHTS
- FLASHING AMBER BEACON
- TEMPORARY CONCRETE BARRIER WALL
- WORK ZONE
- IMPACT ATTENUATOR

1. PAVEMENT MARKING TAPE, TYPE IV 4", SOLID WHITE LINE
2. PAVEMENT MARKING TAPE, TYPE IV 4", SOLID YELLOW LINE
3. PAVEMENT MARKING TAPE, TYPE IV 6", 2' DASH - 6' SKIP WHITE
4. PAVEMENT MARKING TAPE, TYPE IV 8", SOLID WHITE LINE
5. PAVEMENT MARKING TAPE, TYPE IV 12", SOLID WHITE LINE

N

0 50 100
SCALE IN FEET

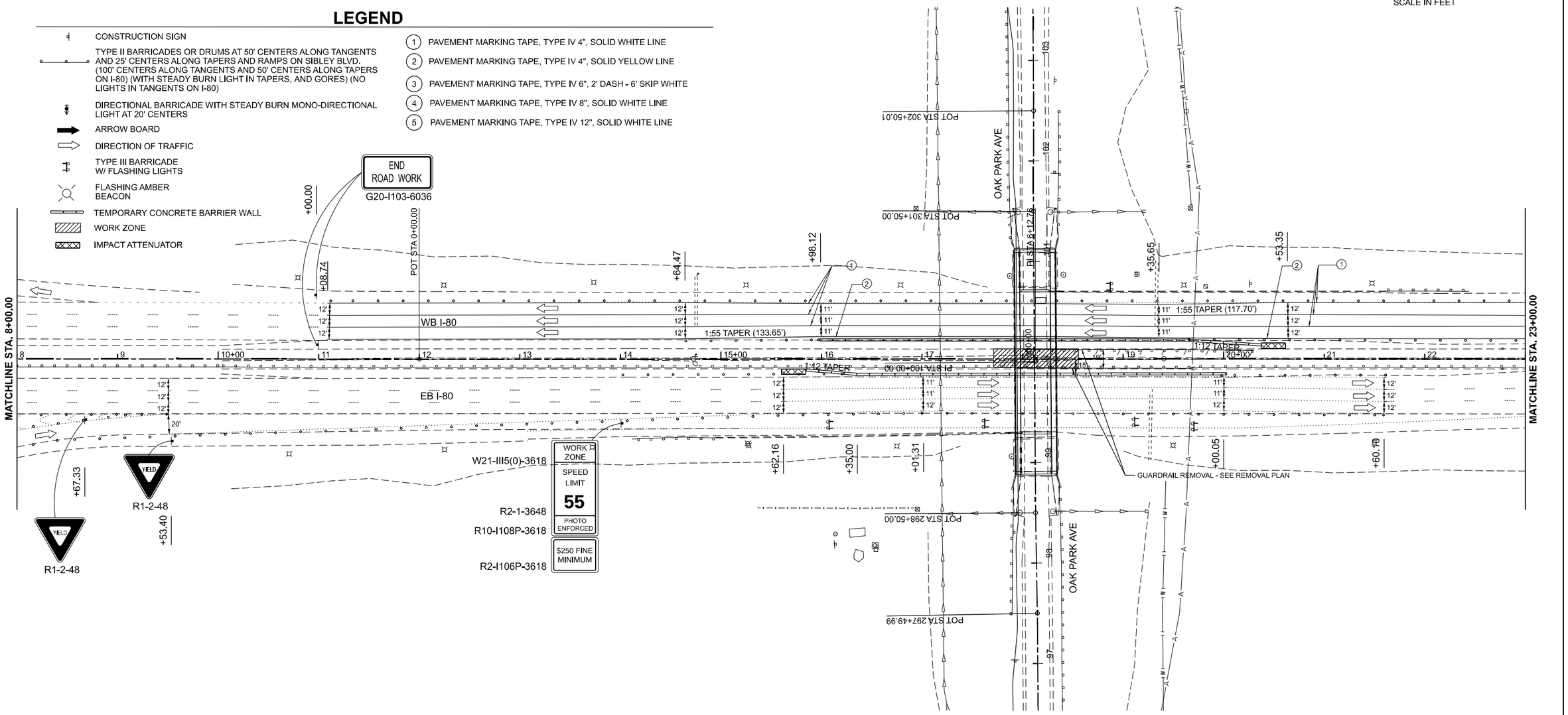

MODEL: D162W20-sht-staging 2.2
FILE NAME: c:\pw\working\primeral\pwprod\nguyen2\dms56232\D162W20-sht-staging2_02.dgn

MILLENNIA PROFESSIONAL SERVICES
www.millennia.pro

USER NAME = Inguyen	DESIGNED - TVN	REVISED -	
	DRAWN - JP/SKP	REVISED -	
	CHECKED - TW	REVISED -	
PLOT DATE = 5/5/2026	DATE - 05/06/2026	REVISED -	

STATE OF ILLINOIS
DEPARTMENT OF TRANSPORTATION

OAK PARK AVENUE OVER I-80
SUGGESTED STAGES OF CONSTRUCTION - STAGE 2A

SCALE: 1"=50' | SHEET 7 OF 8 SHEETS | STA. 8+00.00 | TO STA. 23+00.00

F.A.I RTE.	SECTION	COUNTY	TOTAL SHEETS	SHEET NO.
80	FAI 80 23 Bridge Replacement 2	COOK	158	43
		CONTRACT NO. 62W20		
		ILLINOIS	FED. AID PROJECT	

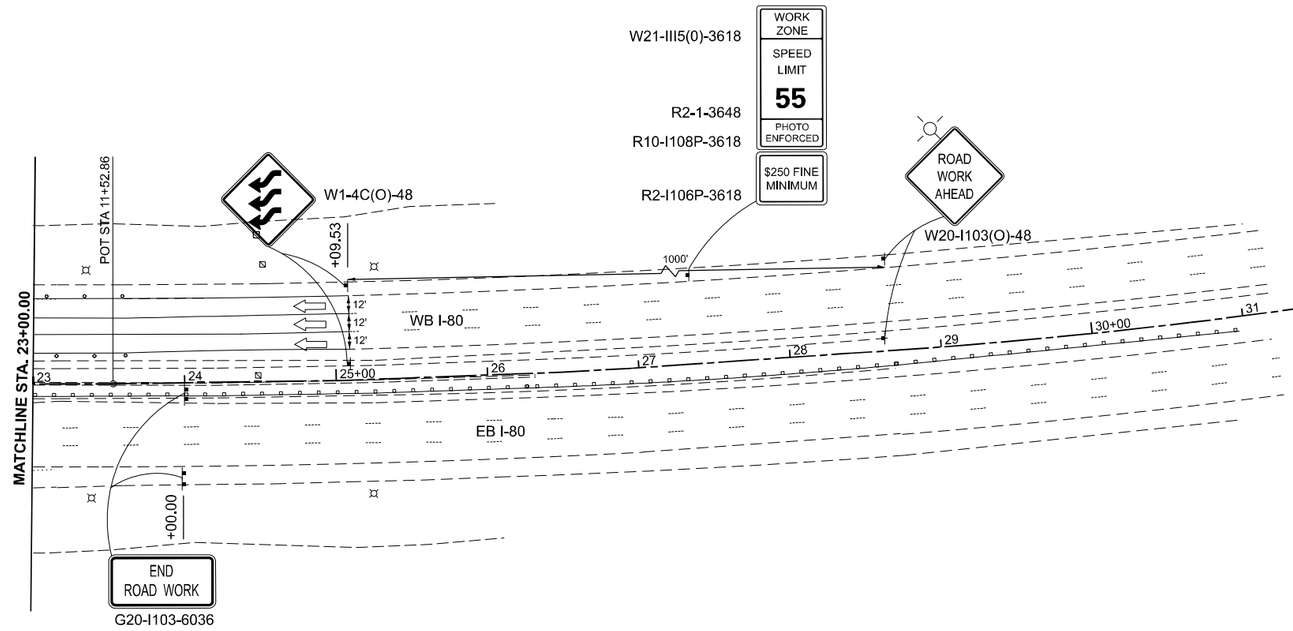

N

0 50 100

SCALE IN FEET

LEGEND

- CONSTRUCTION SIGN
- TYPE II BARRICADES OR DRUMS AT 50' CENTERS ALONG TANGENTS AND 25' CENTERS ALONG TAPERS AND RAMPS ON SIBLEY BLVD. (100' CENTERS ALONG TANGENTS AND 50' CENTERS ALONG TAPERS ON I-80) (WITH STEADY BURN LIGHT IN TAPERS, AND GORES) (NO LIGHTS IN TANGENTS ON I-80)
- DIRECTIONAL BARRICADE WITH STEADY BURN MONO-DIRECTIONAL LIGHT AT 20' CENTERS
- ARROW BOARD
- DIRECTION OF TRAFFIC
- TYPE III BARRICADE W/ FLASHING LIGHTS
- FLASHING AMBER BEACON
- TEMPORARY CONCRETE BARRIER WALL
- WORK ZONE
- IMPACT ATTENUATOR

1. PAVEMENT MARKING TAPE, TYPE IV 4", SOLID WHITE LINE
2. PAVEMENT MARKING TAPE, TYPE IV 4", SOLID YELLOW LINE
3. PAVEMENT MARKING TAPE, TYPE IV 6", 2' DASH - 6' SKIP WHITE
4. PAVEMENT MARKING TAPE, TYPE IV 8", SOLID WHITE LINE
5. PAVEMENT MARKING TAPE, TYPE IV 12", SOLID WHITE LINE

MODEL: D162W20-sht-staging 2.3
FILE NAME: c:\pwworking\primera\pwprod\tnguyen2\dms56232\D162W20-sht-staging2_03.dgn

MILLENNIA PROFESSIONAL SERVICES
www.millennia.pro

USER NAME = tnguyen	DESIGNED - TVN	REVISED -	
	DRAWN - JP/SKP	REVISED -	
	CHECKED - TW	REVISED -	
PLOT DATE = 5/5/2026	DATE - 05/06/2026	REVISED -	

STATE OF ILLINOIS
DEPARTMENT OF TRANSPORTATION

OAK PARK AVENUE OVER I-80
SUGGESTED STAGES OF CONSTRUCTION - STAGE 2A

SCALE: 1"=50' | SHEET 8 OF 8 SHEETS | STA. 23+00.00 | TO STA. 36+00.00

F.A.I RTE.	SECTION	COUNTY	TOTAL SHEETS	SHEET NO.
80	FAI 80 23 Bridge Replacement 2	COOK	158	44
		CONTRACT NO. 62W20		
	ILLINOIS FED. AID PROJECT			

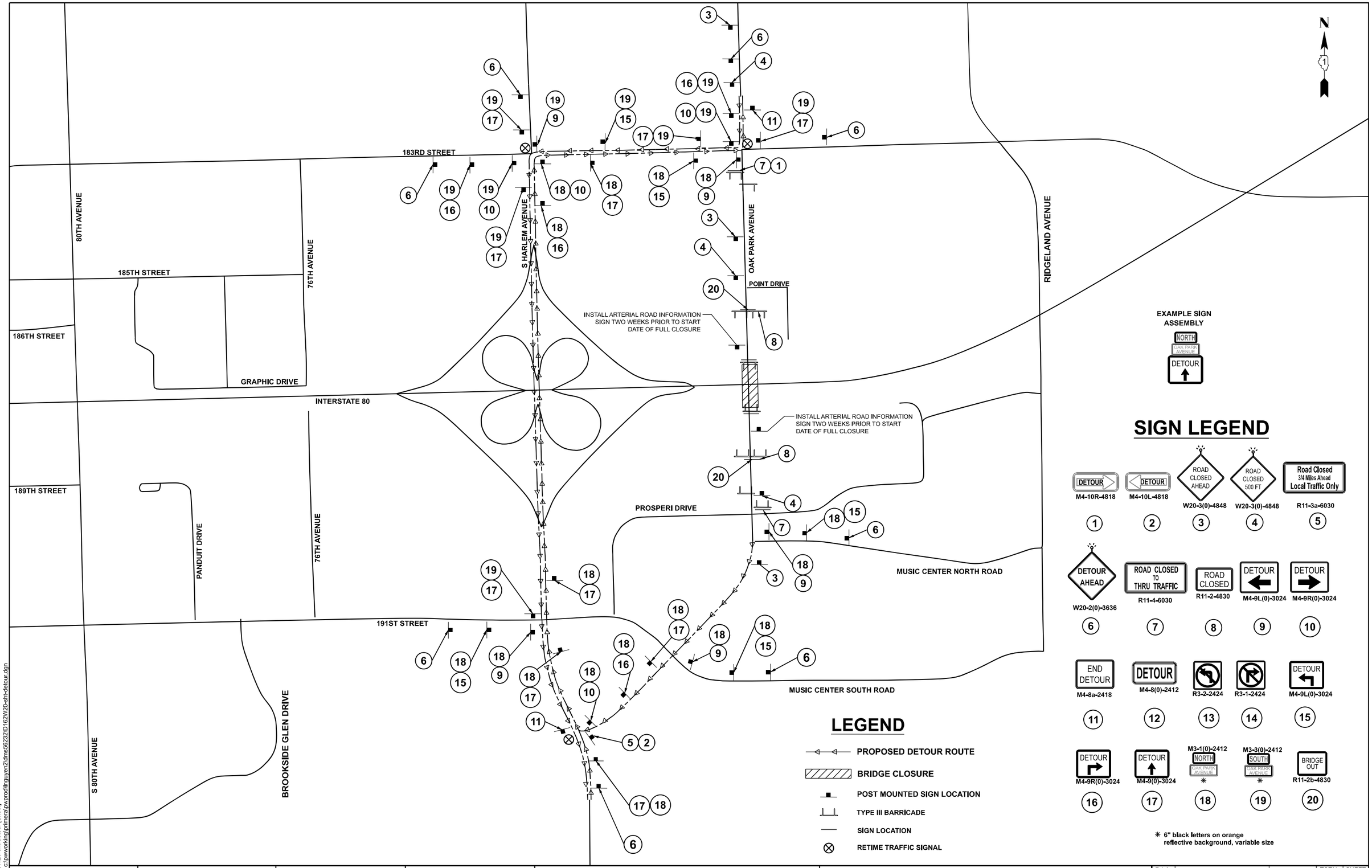

MODEL: D16W20-sht-detour [Sheet]
FILE NAME: c:\pwworking\primera\pwprod\nguyen2\dms562321\D162W20-sht-detour.dgn

MILLENNIA PROFESSIONAL SERVICES www.millennia.pro

USER NAME = Inguyen	DESIGNED - TVN	REVISED -	
	DRAWN - JP/SKP	REVISED -	
	CHECKED - TW	REVISED -	
PLOT DATE = 4/28/2026	DATE - 05/06/2026	REVISED -	

STATE OF ILLINOIS
DEPARTMENT OF TRANSPORTATION

OAK PARK AVENUE OVER I-80
DETOUR PLAN

SCALE: 1"=500' | SHEET 1 OF 2 SHEETS | STA. | TO STA.

F.A.I RTE.	SECTION	COUNTY	TOTAL SHEETS	SHEET NO.
80	FAI 80 23 Bridge Replacement 2	COOK	158	45
		CONTRACT NO. 62W20		
		ILLINOIS FED. AID PROJECT		

ARTERIAL ROAD INFORMATION SIGN
FOR ROADS TO BE FULLY CLOSED
AND DETOURED

SHALL BE PAID FOR AS TEMPORARY INFORMATION SIGNING.
ONE SIGN ASSEMBLY EQUALS 27.3 SQ. FT.

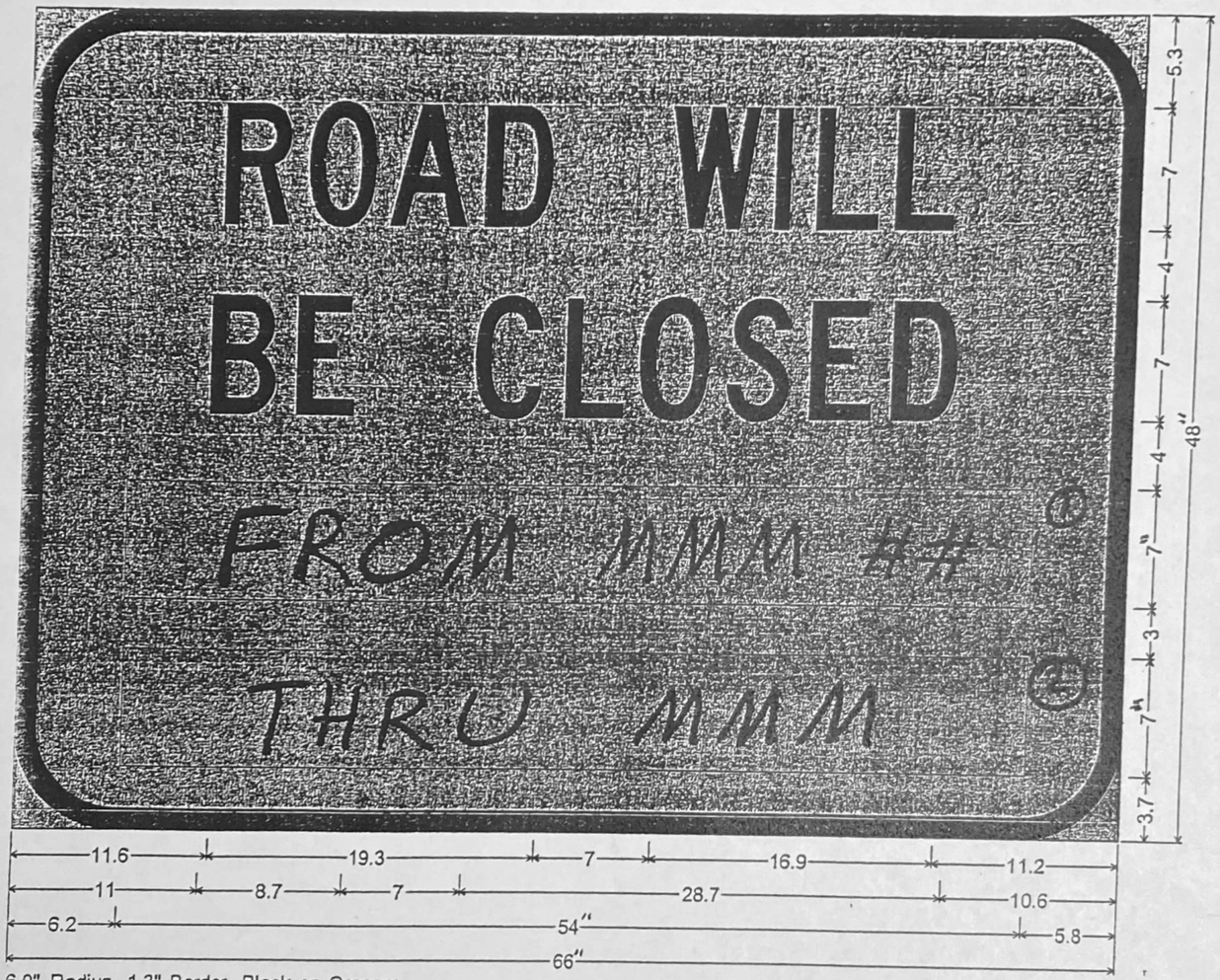

6.0" Radius, 1.3" Border, Black on Orange;
"ROAD WILL" C 2K; "BE CLOSED" C 2K; Rectangle Orange; Rectangle Orange; "HIGHWAY C" FONT

① OVERLAY PANEL①TO CONTAIN STARTING DATE OF FULL CLOSURE AND DETOUR IMPLEMENTATION. (i.e. "FROM APR 2")

② OVERLAY PANEL②TO CONTAIN ENDING MONTH OF FULL CLOSURE AND DETOUR (i.e. "THRU JULY"). OMIT THE DATE ON PANEL②; MONTH ONLY.

ERECT SIGN ASSEMBLY (POST-MOUNTED) WITH PANELS ① AND ② IN PLACE ON ROAD TO BE CLOSED IN EACH DIRECTION NEAR POINT OF CLOSURE OR WITHIN SECTION TO BE FULLY CLOSED TWO (2) WEEKS PRIOR TO START DATE OF FULL CLOSURE. REMOVE ASSEMBLY AFTER CLOSURE.

MODEL: D16W20-sht-detour-details
FILE NAME: c:\pwworking\primera\pwprod\lnguyen2\dms56232\D16W20-sht-detour-sign-detail.dgn

MILLENNIA PROFESSIONAL SERVICES
www.millennia.pro

USER NAME = lnguyen	DESIGNED - TVN	REVISED -
	DRAWN - JP/SKP	REVISED -
	CHECKED - TW	REVISED -
PLOT DATE = 5/5/2026	DATE - 05/06/2026	REVISED -

STATE OF ILLINOIS
DEPARTMENT OF TRANSPORTATION

OAK PARK AVENUE OVER I-80
DETOUR PLAN - SIGN DETAILS

SCALE: N/A | SHEET 2 OF 2 SHEETS | STA. | TO STA.

F.A.I RTE.	SECTION	COUNTY	TOTAL SHEETS	SHEET NO.
80	FAI 80 23 Bridge Replacement 2	COOK	158	46
		CONTRACT NO. 62W20		
	ILLINOIS	FED. AID PROJECT		

SEDIMENT AND EROSION CONTROL NOTES:

1. SEDIMENT AND EROSION CONTROL DEVICES SHALL BE FUNCTIONAL BEFORE LAND IS OTHERWISE DISTURBED ON THE SITE.
2. THE SURFACE OF STRIPPED AREAS SHALL BE PERMANENTLY OR TEMPORARILY PROTECTED FROM SOIL EROSION WITHIN 15 DAYS AFTER FINAL GRADE IS REACHED. STRIPPED AREAS NOT AT FINAL GRADE THAT WILL REMAIN UNDISTURBED FOR MORE THAN 15 DAYS AFTER INITIAL DISTURBANCE SHALL BE PROTECTED FROM EROSION.
3. IF A STOCKPILE IS TO REMAIN IN PLACE FOR MORE THAN 3 DAYS, THEN SEDIMENT AND EROSION CONTROL DEVICES SHALL BE INSTALLED DURING CONSTRUCTION.
4. STORM SEWER INLETS SHALL BE PROTECTED WITH SEDIMENT TRAPPING OR FILTER CONTROL DEVICES DURING CONSTRUCTION.
5. THE QUANTITIES SHOWN FOR ALL EROSION CONTROL MEASURES INCLUDE THE INSTALLATION, MAINTENANCE, AND REMOVAL OF THE MEASURE .
6. THE CONTRACTOR SHALL MAINTAIN ALL EROSION CONTROL MEASURES IN SERVICEABLE CONSITION AT ALL TIMES. EROSION CONTROL MEASURES SHALL BE INSPECTED ON A WEEKLY BASIS AND WITHIN 24 HOURS OF ANY STORM EXCEEDING 0.5 INCHES OF PRECIPITATION OR EQUIVALENT SNOWFALL.
7. ALL CONSTRUCTION ACTIVITIES SHALL BE IN ACCORDANCE WITH THE NATIONAL POLLUTANT DISCHARGE ELIMINATION SYSTEM STORM WATER PERMIT FOR THIS PROJECT.
8. AS WORK PROGRESSES, ALL SLOPES 3:1 OR GREATER SHALL RECEIVE TEMPORARY EROSION CONTROL SEEDING AND EROSION CONTROL BLANKET IMMEDIATELY. ALL FLATTER AREAS THAT DO NOT HAVE A COVER OF VEGETATION AND WHERE NO FURTHER WORK IS TO OCCUR FOR 14 DAYS OR MORE, SHALL BE TEMPORARILY SEEDED WITHIN SEVEN (7) CALENDAR DAYS UNLESS OTHERWISE DIRECTED BY THE ENGINEER. A SUFFICIENT QUANTITY OF TEMPORARY EROSION CONTROL SEEDING IS INCLUDED TO COVER THE LIMITS OF PERMANENT LANDSCAPING.
9. TEMPORARY DITCH CHECKS SHALL BE PLACED IMMEDIATELY AFTER DITCH GRADING (OR CLEANING AND REGRADING) IS COMPLETED.
10. ALL PROPOSED OPEN DRAINAGE STRUCTURES SHALL BE PROTECTED AS DIRECTED BY THE ENGINEER WITH INLET FILTERS, AND THIS WORK SHALL BE PAID FOR AT THE CONTRACT UNIT PRICE PER EACH FOR "INLET FILTERS". ALL OPEN END CULVERTS SHALL BE PROTECTED AS DIRECTED BY THE ENGINEER, WHICH WORK SHALL BE PAID FOR AT THE CONTRACT UNIT PRICE EACH FOR "INLET AND PIPE PROTECTION". " INLET AND PIPE PROTECTION" SHALL BE COMPRESSED OF DITCH CHECKS, TEMPORARY EROSION CONTROL BLANKET. STRAW BALES AND SILT FENCE SHALL NOT BE USED AS INLET AND PIPE PROTECTION.
11. WATER PUMPED OR OTHERWISE DISCHARGED FROM THE SITE DURING CONSTRUCTION DEWATERING SHALL BE FILTERED.
12. ANY SOIL, MUD OR DEBRIS WASHED, TRACKED, OR DEPOSITED ONTO THE STREET SHALL BE REMOVED PRIOR TO THE END OF THE WORK DAY.
13. PORTABLE TOILETS SHALL BE PLACED AWAY FROM INLETS AND WATER COURSES.
14. ALL TEMPORARY EROSION CONTROL MEASURES SHALL BE REMOVED WITHIN 30 DAYS AFTER FINAL SITE STABILIZATION IS ACHIEVED OR AFTER THE TEMPORARY MEASURES AREA NO LONGER NEEDED AS DIRECTED BY THE ENGINEER.
15. THE EROSION CONTROL MEASURES INDICATED IN THE PLANS ARE THE MINIMUM REQUIREMENTS. ADDITIONAL MEASURES MAY BE REQUIRED, AS DIRECTED BY THE ENGINEER OR GOVERNING POLICY.
16. TEMPORARY CONCRETE WASHOUT AREA FACILITY SHALL BE AT LOCATIONS DESIGNATED BY THE ENGINEER AND WILL NOT BE PAID FOR SEPARATELY BUT INCLUDED IN THE COST OF ALL OTHER ITEMS.
17. MAINTENANCE OF TEMPORARY EROSION CONTROL SYSTEMS WILL NOT BE PAID FOR SEPARATELY BUT INCLUDED IN THE COST OF TEMPORARY EROSION CONTROL ITEM.
18. THE CONTRACTOR IS RESPONSIBLE FOR THE CONTROL OF DUST AT ALL TIMES DURING THE DURATION OF THE PROJECT. 24 HOURS PER DAY, 7 DAYS PER WEEK, INCLUDING NON-WORKING HOURS, WEEKENDS AND HOLIDAYS. THIS WORK SHALL BE CONSIDERED COMPLETE AFTER THE COMPLETION OF ALL ALL PERMANENT EROSION CONTROL MEASURES REQUIRED FOR THE PROJECT, AND AFTER ALL TEMPORARY AND PERMANENT SEEDING HAS TAKEN PLACE. WORK ON THIS PROJECT SHALL BE CONDUCTED IN A MANNER THAT WILL NOT RESULT IN GENERATING EXCESSIVE AIRBORE PARTICULATE WATTER OR NUISANCE DUST CONDITIONS.

N

0 50 100

SCALE IN FEET

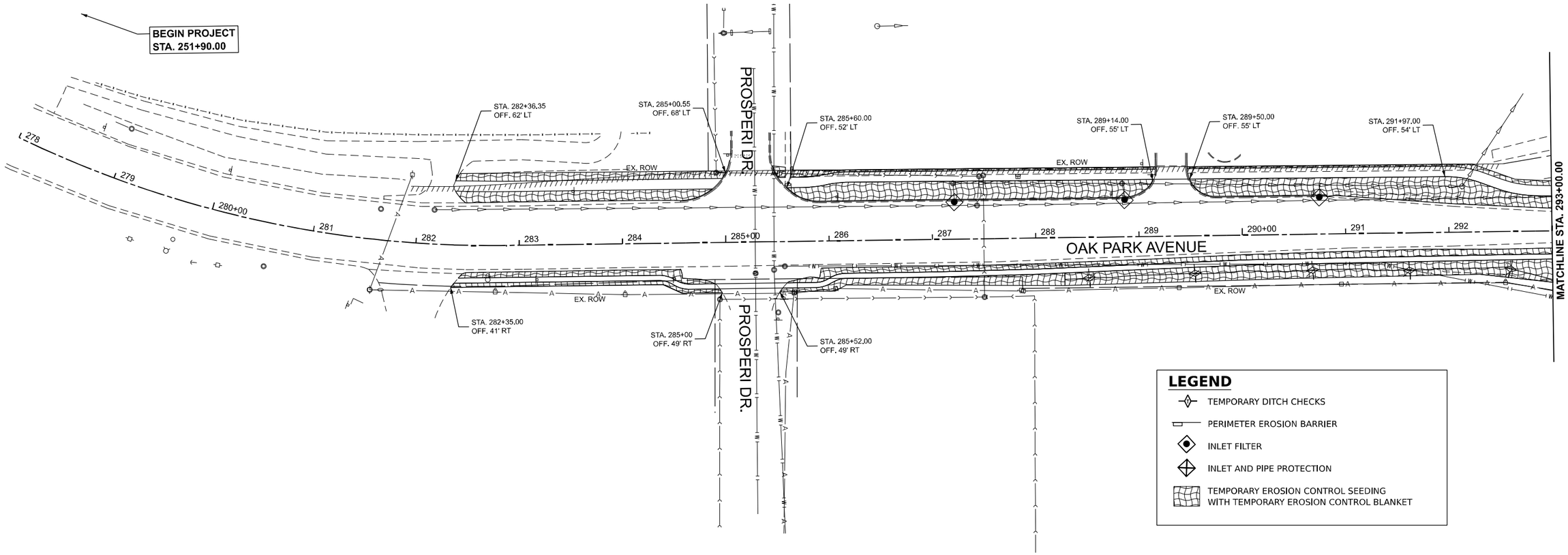

LEGEND

- TEMPORARY DITCH CHECKS
- PERIMETER EROSION BARRIER
- INLET FILTER
- INLET AND PIPE PROTECTION
- TEMPORARY EROSION CONTROL SEEDING WITH TEMPORARY EROSION CONTROL BLANKET

MODEL: D162W20-sht-eros-01
FILE NAME: c:\pwworking\primeral\pwprod\nguyen2\dms562321\D162W20-sht-eros-01.dgn

MILLENNIA PROFESSIONAL SERVICES www.millennia.pro

USER NAME = Inguyen	DESIGNED - TVN	REVISED -	
	DRAWN - JP/SKP	REVISED -	
	CHECKED - TW	REVISED -	
PLOT DATE = 5/5/2026	DATE - 05/06/2026	REVISED -	

STATE OF ILLINOIS
DEPARTMENT OF TRANSPORTATION

OAK PARK AVENUE OVER I-80
EROSION AND SEDIMENT CONTROL PLAN & NOTES

SCALE: 1"=50' | SHEET 1 OF 3 SHEETS | STA. 278+00.00 | TO STA. 293+00.00

F.A.I RTE.	SECTION	COUNTY	TOTAL SHEETS	SHEET NO.
80	FAI 80 23 Bridge Replacement 2	COOK	158	47
		CONTRACT NO. 62W20		
	ILLINOIS FED. AID PROJECT			

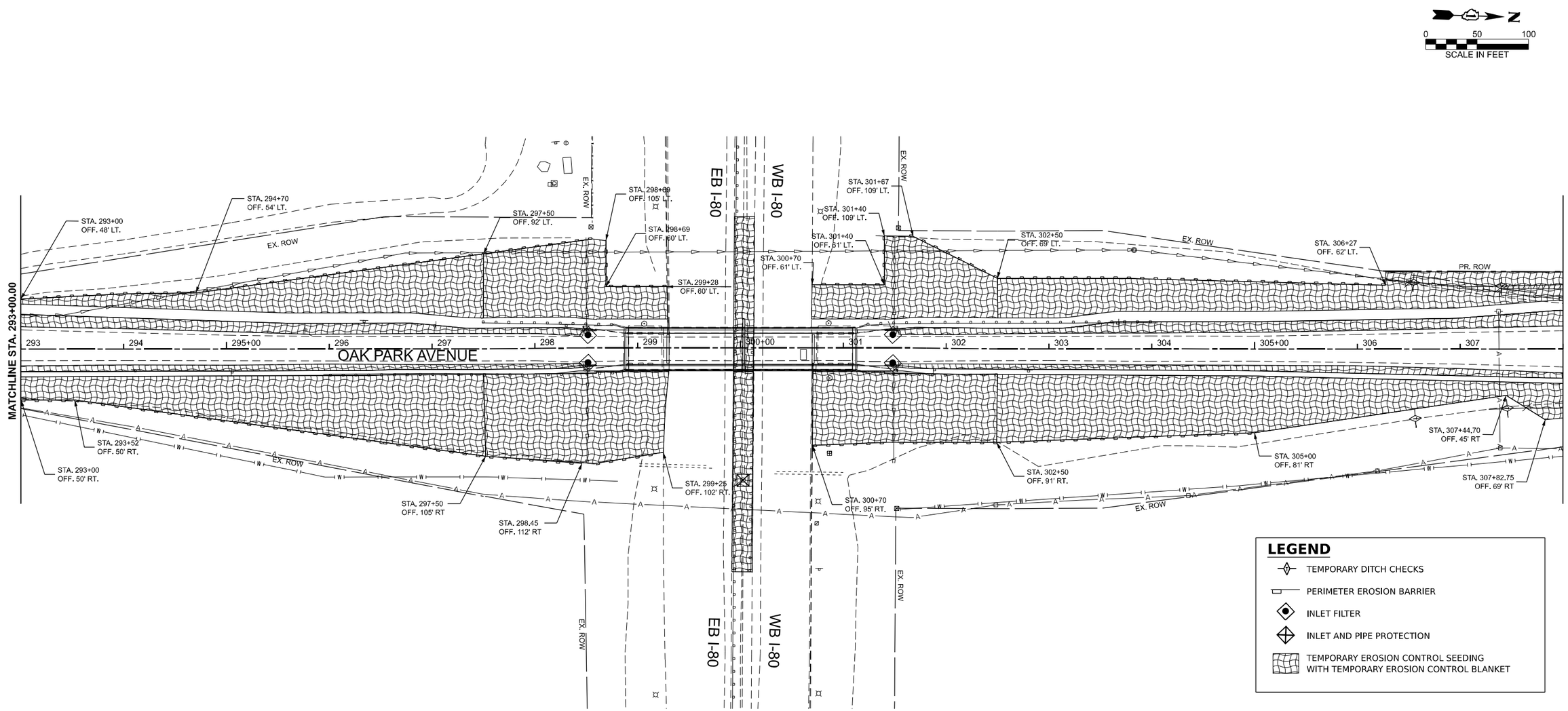

MODEL: D162W20-sht-eros-02
FILE NAME: c:\pw\working\primeral\pwproof\lnguyen2\dms56232\D162W20-sht-eros-02.dgn

MILLENNIA PROFESSIONAL SERVICES
www.millennia.pro

USER NAME = lnguyen	DESIGNED - TVN	REVISED -	
	DRAWN - JP/SKP	REVISED -	
	CHECKED - TW	REVISED -	
PLOT DATE = 5/5/2026	DATE - 05/06/2026	REVISED -	

STATE OF ILLINOIS
DEPARTMENT OF TRANSPORTATION

OAK PARK AVENUE OVER I-80
EROSION AND SEDIMENT CONTROL PLAN & NOTES

SCALE: 1"=50' | SHEET 2 OF 3 SHEETS | STA. 293+00.00 | TO STA. 308+00.00

F.A.I RTE.	SECTION	COUNTY	TOTAL SHEETS	SHEET NO.
80	FAI 80 23 Bridge Replacement 2	COOK	158	48
		CONTRACT NO. 62W20		
	ILLINOIS	FED. AID PROJECT		

N

0 50 100
SCALE IN FEET

MATCHLINE STA. 308+00.00

+83.10
75.00' LT.
STA. 309+83.10
O/S. 75.00' LT.

PR. ROW

STA. 310+22.79
O/S. 37.42' LT.

STA. 312+11.42
O/S. 23.43' LT.

RIPRAP

END PROJECT
STA. 326+50.00

308 | 309 | 310+00 | 311 | 312 | 313 | 314 | 315+00 | 316 | 317 | 318 | 319 | 320+00 | 321 | 322

OAK PARK AVENUE

EX. ROW

STA. 310+25.00
OFF. 75' RT

STA. 311+17.30
OFF. 55' RT

W. POINT DR.

LEGEND

- TEMPORARY DITCH CHECKS
- PERIMETER EROSION BARRIER
- INLET FILTER
- INLET AND PIPE PROTECTION
- TEMPORARY EROSION CONTROL SEEDING WITH TEMPORARY EROSION CONTROL BLANKET

MODEL: D162W20-sht-eros-03
FILE NAME: c:\pwworking\primeral\pwprod\hnguyen2\dms56232\D162W20-sht-eros-03.dgn

MILLENNIA PROFESSIONAL SERVICES
www.millennia.pro

USER NAME = hnguyen	DESIGNED - TVN	REVISED -	
	DRAWN - JP/SKP	REVISED -	
	CHECKED - TW	REVISED -	
PLOT DATE = 5/5/2026	DATE - 05/06/2026	REVISED -	

STATE OF ILLINOIS
DEPARTMENT OF TRANSPORTATION

OAK PARK AVENUE OVER I-80
EROSION AND SEDIMENT CONTROL PLAN & NOTES

SCALE: 1"=50' | SHEET 3 OF 3 SHEETS | STA. 308+00.00 | TO STA. 323+00.00

F.A.I RTE.	SECTION	COUNTY	TOTAL SHEETS	SHEET NO.
80	FAI 80 23 Bridge Replacement 2	COOK	158	49
		CONTRACT NO. 62W20		
	ILLINOIS FED. AID PROJECT			

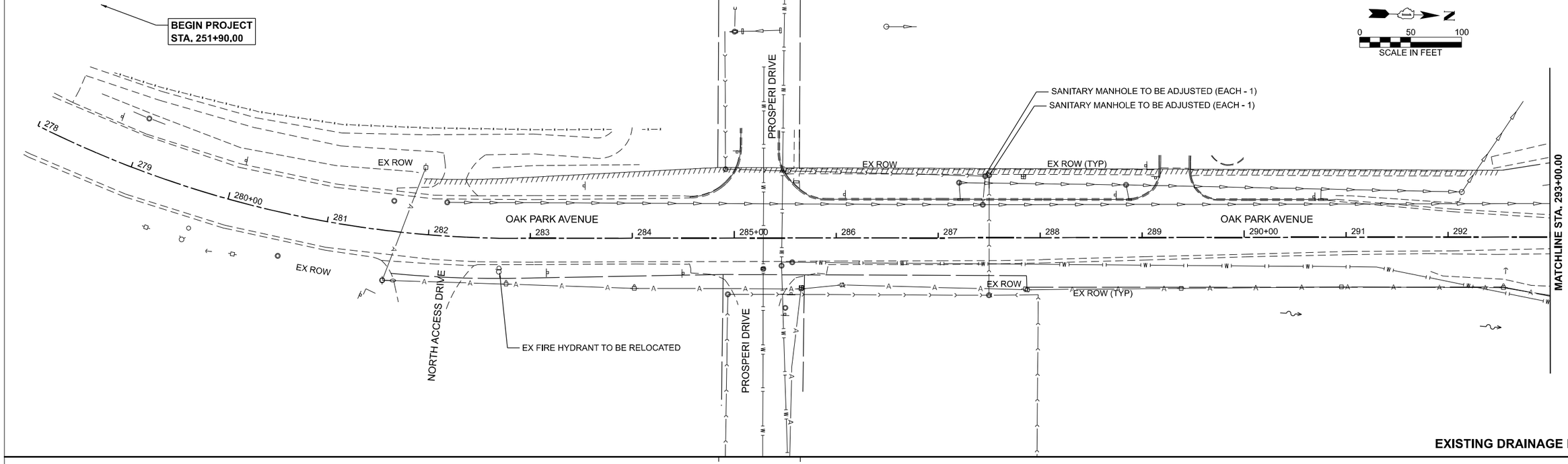

EXISTING DRAINAGE PLAN

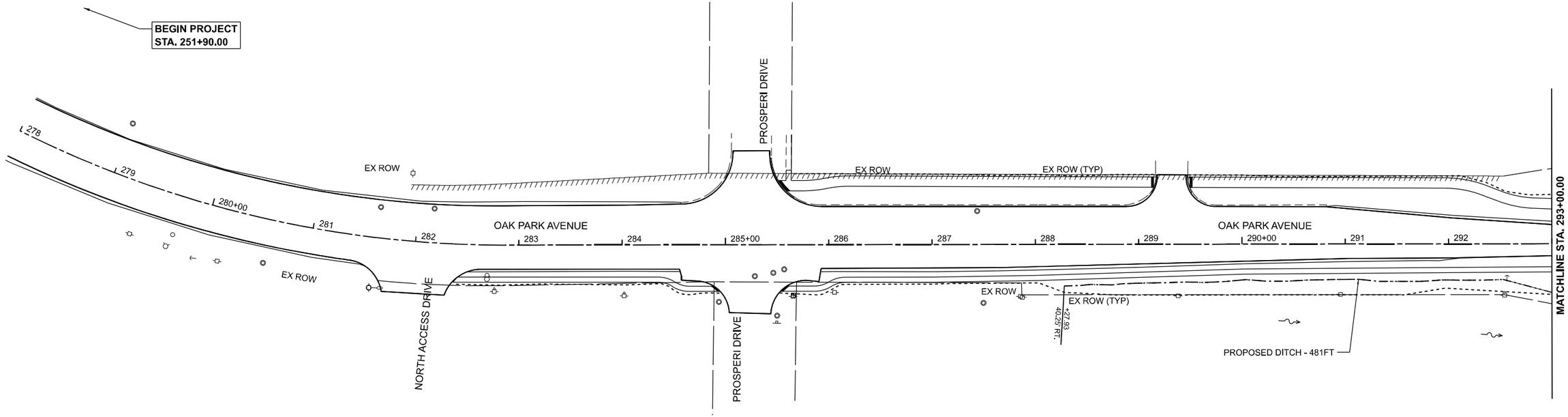

NOTE:

1. ALL STORM SEWER STRUCTURES AND PIPES WITHIN THE PROJECT LIMITS ARE TO BE CLEANED OUT AS NECCESSARY AS PART OF THE PROPOSED IMPROVEMENTS.

PROPOSED DRAINAGE PLAN

MODEL: D162W20-sht-drain-01
FILE NAME: c:\pwworking\primeralpwprod\lnguyen2\dms56232\D162W20-sht-drain-01.dgn

MILLENNIA PROFESSIONAL SERVICES
www.millennia.pro

USER NAME = lnguyen	DESIGNED - TVN	REVISED -
	DRAWN - JP/SKP	REVISED -
	CHECKED - TW	REVISED -
PLOT DATE = 5/5/2026	DATE - 05/06/2026	REVISED -

STATE OF ILLINOIS
DEPARTMENT OF TRANSPORTATION

OAK PARK AVENUE OVER I-80
DRAINAGE REMOVAL AND PROPOSED PLAN

SCALE: 1"=50' | SHEET 1 OF 4 SHEETS | STA. 278+00.00 TO STA. 293+00.00

F.A.I RTE.	SECTION	COUNTY	TOTAL SHEETS	SHEET NO.
80	FAI 80 23 Bridge Replacement 2	COOK	158	50
		CONTRACT NO. 62W20		
	ILLINOIS FED. AID PROJECT			

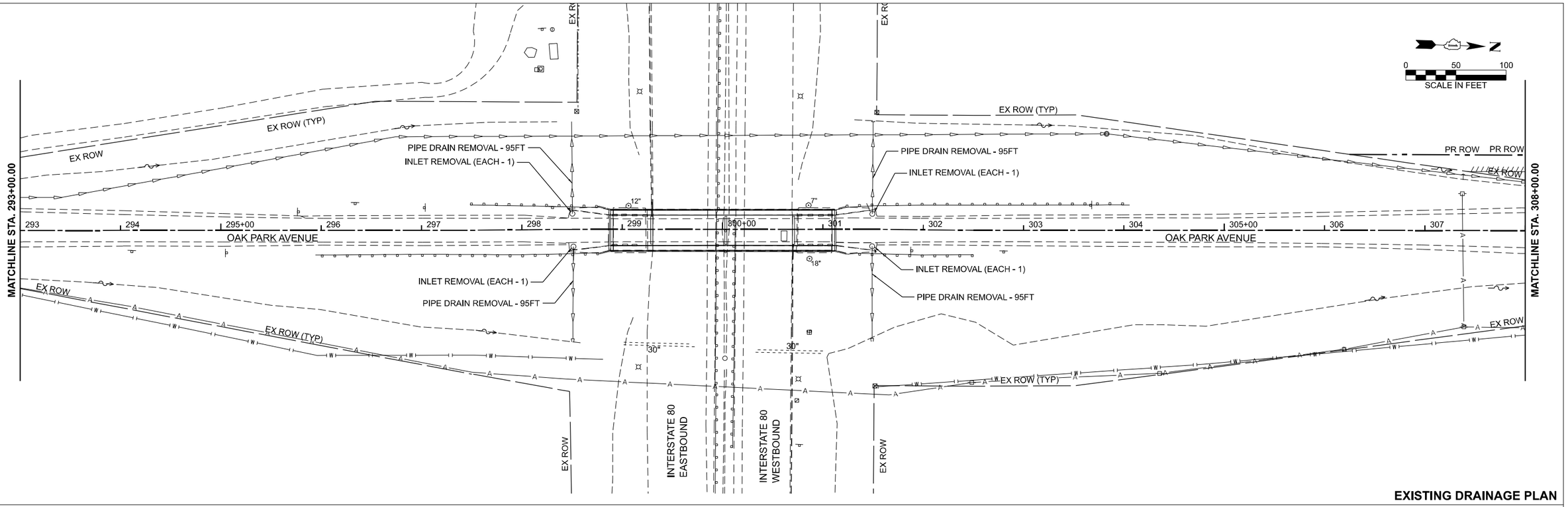

EXISTING DRAINAGE PLAN

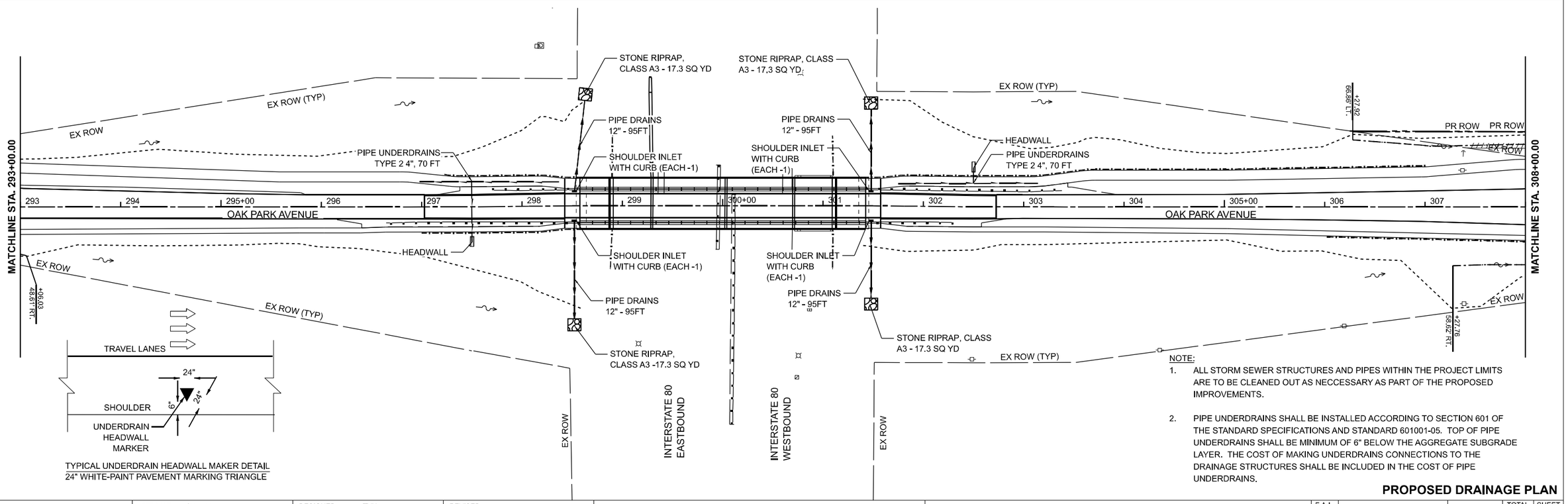

NOTE:

1. ALL STORM SEWER STRUCTURES AND PIPES WITHIN THE PROJECT LIMITS ARE TO BE CLEANED OUT AS NECCESSARY AS PART OF THE PROPOSED IMPROVEMENTS.

2. PIPE UNDERDRAINS SHALL BE INSTALLED ACCORDING TO SECTION 601 OF THE STANDARD SPECIFICATIONS AND STANDARD 601001-05. TOP OF PIPE UNDERDRAINS SHALL BE MINIMUM OF 6" BELOW THE AGGREGATE SUBGRADE LAYER. THE COST OF MAKING UNDERDRAINS CONNECTIONS TO THE DRAINAGE STRUCTURES SHALL BE INCLUDED IN THE COST OF PIPE UNDERDRAINS.

PROPOSED DRAINAGE PLAN

MODEL: D162W20-sht-drain-02
FILE NAME: c:\pwworking\prtmerat\pwprod\nguyen2\dms56232\D162W20-sht-drain-02.dgn

MILLENNIA PROFESSIONAL SERVICES
www.millennia.pro

USER NAME = Inguyen	DESIGNED - TVN	REVISED -	
	DRAWN - JP/SKP	REVISED -	
	CHECKED - TW	REVISED -	
PLOT DATE = 5/5/2026	DATE - 05/06/2026	REVISED -	

STATE OF ILLINOIS
DEPARTMENT OF TRANSPORTATION

OAK PARK AVENUE OVER I-80
DRAINAGE REMOVAL AND PROPOSED PLAN

SCALE: 1"=50' | SHEET 2 OF 4 SHEETS | STA. 293+00.00 | TO STA. 308+00.00

F.A.I RTE.	SECTION	COUNTY	TOTAL SHEETS	SHEET NO.
80	FAI 80 23 Bridge Replacement 2	COOK	158	51
		CONTRACT NO. 62W20		
	ILLINOIS FED. AID PROJECT			

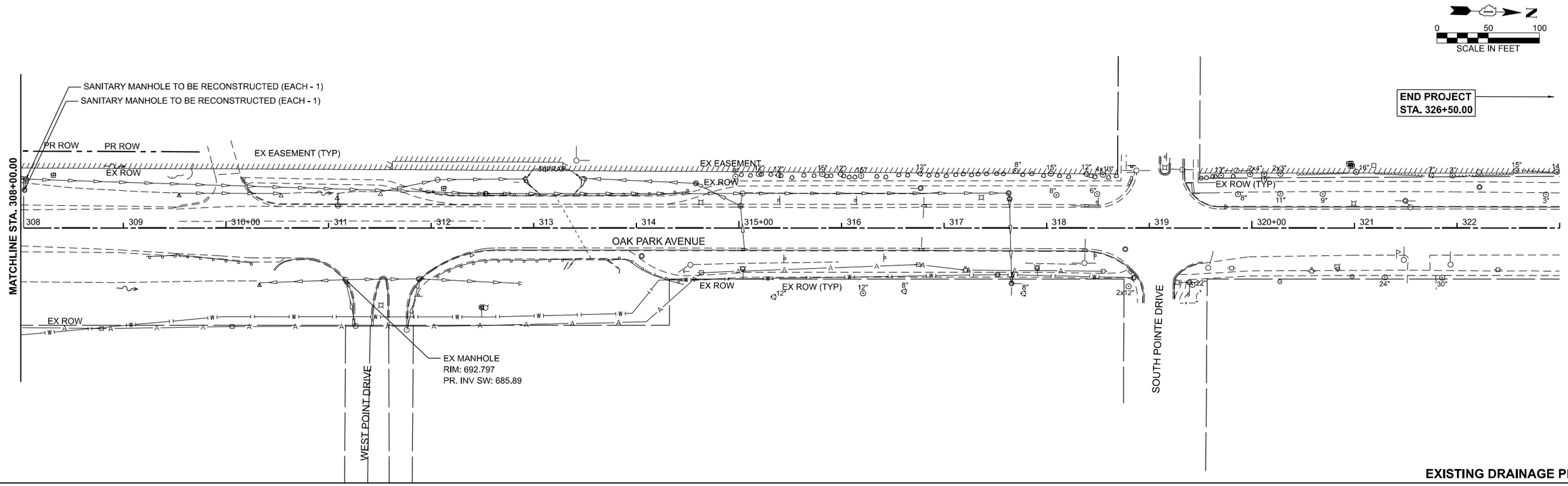

EXISTING DRAINAGE PLAN

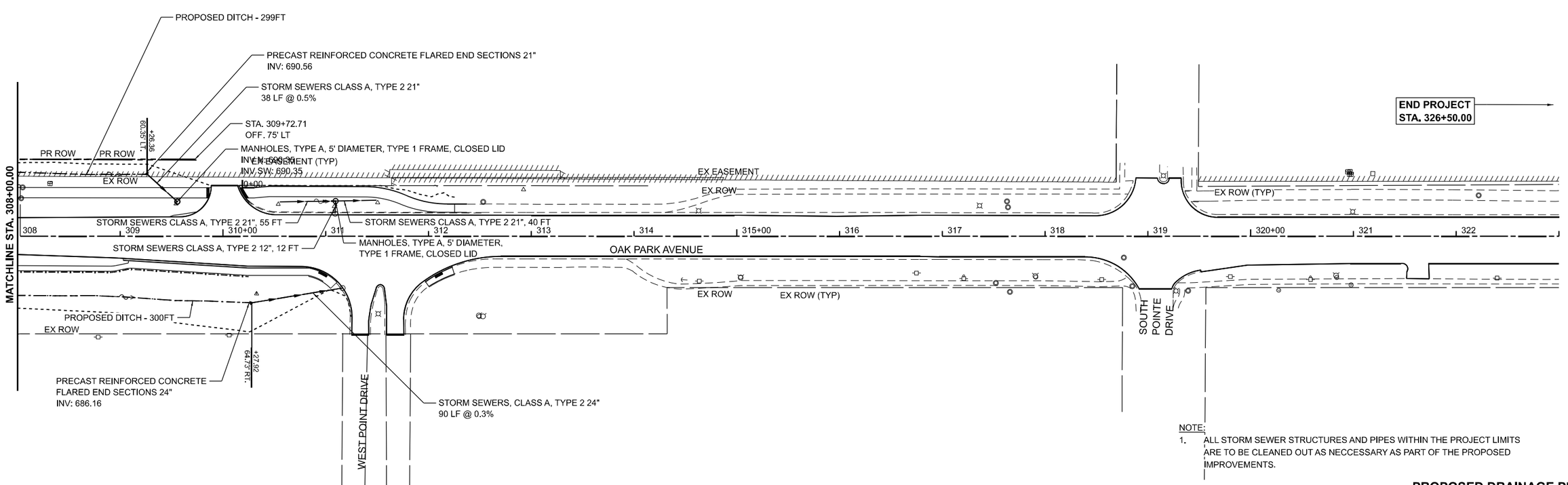

NOTE:
1. ALL STORM SEWER STRUCTURES AND PIPES WITHIN THE PROJECT LIMITS ARE TO BE CLEANED OUT AS NECCESSARY AS PART OF THE PROPOSED IMPROVEMENTS.

PROPOSED DRAINAGE PLAN

MODEL: D162W20-slit-drain-03
FILE NAME: c:\pw\working\primera\pwprod\tnguyen2\dms56232\D162W20-slit-drain-03.dgn

MILLENNIA PROFESSIONAL SERVICES
www.millennia.pro

USER NAME = tnguyen	DESIGNED - TVN	REVISED -	
	DRAWN - JP/SKP	REVISED -	
	CHECKED - TW	REVISED -	
PLOT DATE = 5/5/2026	DATE - 05/06/2026	REVISED -	

STATE OF ILLINOIS
DEPARTMENT OF TRANSPORTATION

OAK PARK AVENUE OVER I-80
DRAINAGE REMOVAL AND PROPOSED PLAN

SCALE: 1"=50' | SHEET 3 OF 4 SHEETS | STA. 308+00.00 | TO STA. 323+00.00

F.A.I RTE.	SECTION	COUNTY	TOTAL SHEETS	SHEET NO.
80	FAI 80 23 Bridge Replacement 2	COOK	158	52
		CONTRACT NO. 62W20		
		ILLINOIS	FED. AID PROJECT	

DRAINAGE SCHEDULE

STATION +/-	OFFSET	TYPE	28100105 STONE RIPRAP CL A3	54213666 PRC FLAR END SEC 21	54213669 PRC FLAR END SEC 24	550A0340 STORM SEW CL A 2 12	550A0400 STORM SEW CL A 2 21	550A0410 STORM SEW CL A 2 24	60100945 PIPE DRAINS 12	60221100 MAN TA 5 DIA T1F CL	X1200234 SH INLET WITH CURB	X0322916 PRO SS CONN TO EX SS	20800150 TRENCH BACKFILL	60108204 PIPE UNDERD R T 2 4	60100060 CONC HDWL FOR P DRAIN
			SQ YD	EACH	EACH	FOOT	FOOT	FOOT	FOOT	EACH	EACH	EACH	CU YD	FOOT	EACH
OAK PARK AVENUE															
297+50	LT/RT													70	1
298+52	-15	IN							95		1				
298+52	118	RR	17.3												
298+52	15	IN							95		1				
298+63	-111	RR	17.3												
301+47.8	-14	IN							95		1				
301+47.8	98	RR	17.3												
301+47.8	14	IN							95		1				
301+47.8	-102	RR	17												
302+50	LT/RT													70	1
309+26.4	-60	FES		1			38						19		
309+56.0	-33	MH								1					
310+27.9	65	FES			1								45		
310+54	-34	SS					55								
310+81.97	57	SS						90							
311+09.57	-34	SS				12									
311+09.5	-34	SS					40								
311+16.5	50	CONN										1			
TOTAL			69	1	1	12	133	90	380	1	4	1	64	140	2

DITCH SCHEDULE

STATION +/-	OFFSET	STATION +/-	OFFSET	21400100 GRADING & SHAP DITCH
				FOOT
OAK PARK AVENUE				
288+27.9	40.3	293+06.0	48.6	481
306+27.9	-66.9	309+26.4	-60.4	299
307+27.8	58.6	310+27.9	64.7	300
TOTAL				1080

REMOVAL SCHEDULE

STATION +/-	OFFSET	TYPE	60500060 REMOV INLETS	X6010003 PIPE DRAIN
			EACH	FOOT
OAK PARK AVENUE				
298+50	-15	IN/DP	1	95
298+50	17	IN/DP	1	95
301+49	-15	IN/DP	1	95
301+49	17	IN/DP	1	95
TOTAL			4	380

ADJUSTMENT SCHEDULE

STATION +/-	OFFSET	TYPE	56400400 FIRE HYDNTS RELOCATED	X6026050 SANITARY MANHOLE ADJ	X6026051 SAN MAN RECONST
			EACH	EACH	EACH
OAK PARK AVENUE					
282+69.85	33	FH	1		
287+46	-61.0	MH		1	
287+50	-61	MH		1	
308+03.6	-37	MH			1
308+05.0	-47.6	MH			1
TOTAL			1	2	2

DRAINAGE MAINTENANCE SCHEDULE

STATION +/-	OFFSET	STATION +/-	OFFSET	X5537800 SS CLEANED 12	X5538000 SS CLEANED 18	X5538100 SS CLEANED 21	X5538200 SS CLEANED 24	Z0018500 DRAINAGE STR CLEANED
				FOOT	FOOT	FOOT	FOOT	EACH
287+20	-54	292+14	-44		493			2
287+20	-37				17			
288+87	-37				15			2
290+75	-37				11			2
292+14	-44	292+74	-133		108			1
309+55	-34	310+54	-34			99		
310+30	52	312+88	54				172	2
311+09	-22			12				1
311+16	51						46	1
311+89	50						51	1
311+49	-35	312+89	-51		141			1
TOTAL				12	785	99	269	13

MODEL: D162W20-sht-drain-04-sch [Sheet]
FILE NAME: c:\pwworking\primeral\pwprod\lnguyen2\dms56232\D162W20-sht-drain-04-sch.dgn

MILLENNIA PROFESSIONAL SERVICES www.millennia.pro

USER NAME = lnguyen	DESIGNED - TVN	REVISED -	
	DRAWN - JP/SKP	REVISED -	
	CHECKED - TW	REVISED -	
PLOT DATE = 5/5/2026	DATE - 05/06/2026	REVISED -	

STATE OF ILLINOIS
DEPARTMENT OF TRANSPORTATION

OAK PARK AVENUE OVER I-80
DRAINAGE REMOVAL AND PROPOSED PLAN - SCHEDULE

SCALE: | SHEET 4 OF 4 SHEETS | STA. | TO STA.

F.A.I RTE.	SECTION	COUNTY	TOTAL SHEETS	SHEET NO.
80	FAI 80 23 Bridge Replacement 2	COOK	158	53
		CONTRACT NO. 62W20		
	ILLINOIS	FED. AID PROJECT		

F.A. RTE.	SECTION	COUNTY	TOTAL SHEETS	SHEET NO.
		COOK	9	1
	ILLINOIS	CONTRACT NO.		

STATE OF ILLINOIS
DEPARTMENT OF TRANSPORTATION

PROPOSED
FEDERAL AID HIGHWAY

OAK PARK AVENUE AT INTERSTATE 80
SECTION
PROJECT
TYPE of IMPROVEMENT
COOK COUNTY

R–90–008–21

PARCEL NUMBER	OWNER	SHEET NUMBER	PROPERTY ACQUIRED BY
00821001	MILLENIAL TELECOMMUNICATIONS, INC. A DELAWARE CORPORATION F/KA OXFORD MEDIA GROUP, INC., F/K/A JAVON BROADCASTING CORPORATION	5,9	

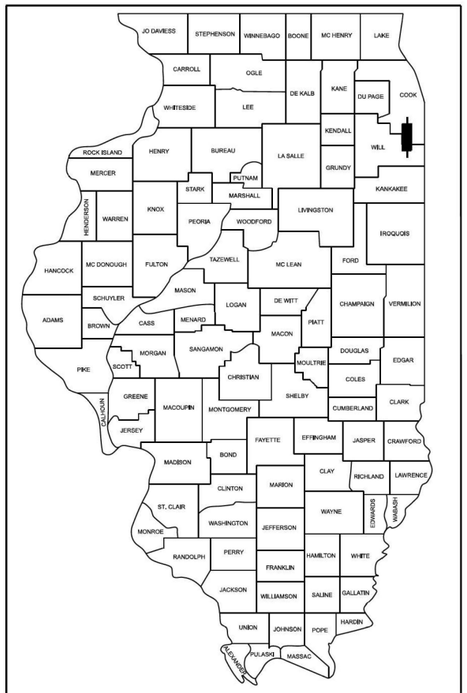

LOCATION OF SECTION INDICATED THUS: –

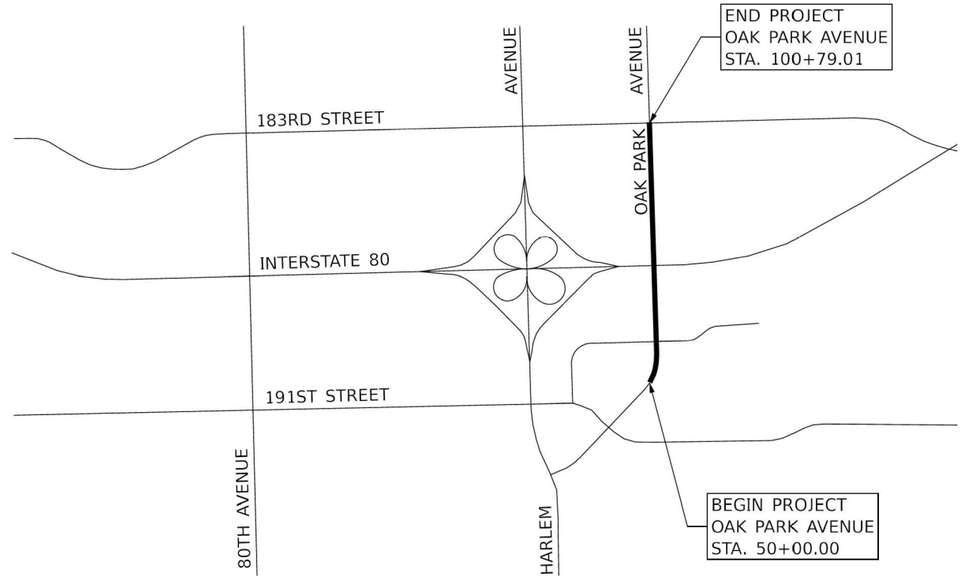

100′ 200′ 300′ — 1″ = 100′
0 10′ 20′ 30′ — 1″ = 10′
0 50′ 100′ — 1″ = 50′
0 50′ 100′ — 1″ = 40′
0 50′ 100′ — 1″ = 30′
0 50′ 100′ — 1″ = 20′

FULL SIZE PLANS HAVE BEEN PREPARED USING STANDARD ENGINEERING SCALES. REDUCED SIZED PLANS WILL NOT CONFORM TO STANDARD SCALES. IN MAKING MEASUREMENTS ON REDUCED PLANS, THE ABOVE SCALES MAY BE USED.

J.U.L.I.E.
JOINT UTILITY LOCATION INFORMATION FOR EXCAVATION
1-800-892-0123
OR 811

PROJECT ENGINEER
PROJECT MANAGER

CONTRACT NO.

STATE OF ILLINOIS
DEPARTMENT OF TRANSPORTATION

SUBMITTED _____ **20** _____

_____
REGIONAL ENGINEER

_____ **20** _____

_____
ENGINEER OF DESIGN AND ENVIRONMENT

_____ **20** _____

_____
DIRECTOR OF PROGRAM DEVELOPMENT

PRINTED BY THE AUTHORITY OF THE STATE OF ILLINOIS

MODEL: Plat 1 [Sheet]
FILE NAME: c:\pwworking\primeral\pwprod\kludzia\dms817751\D162W20-Plat of Highway 1.dgn

Ardmore Roderick

USER NAME = kingaludzia	DESIGNED - KL	REVISED -
	DRAWN - KL	REVISED -
	CHECKED - STB	REVISED -
PLOT DATE = 5/6/2026	DATE - 5/6/2026	REVISED -

STATE OF ILLINOIS
DEPARTMENT OF TRANSPORTATION

OAK PARK AVENUE OVER I-80
PLAT OF HIGHWAYS

SCALE: | SHEET 1 OF 9 SHEETS | STA. | TO STA.

F.A.I RTE.	SECTION	COUNTY	TOTAL SHEETS	SHEET NO.
80	FAI 80 23 Bridge Replacement 2	COOK	158	54
		CONTRACT NO. 62W20		
	ILLINOIS FED. AID PROJECT			

PART OF SECTION 6, TWP. 35 N., R. 13 E. OF THE 3RD. P.M., IN COOK COUNTY, ILLINOIS.

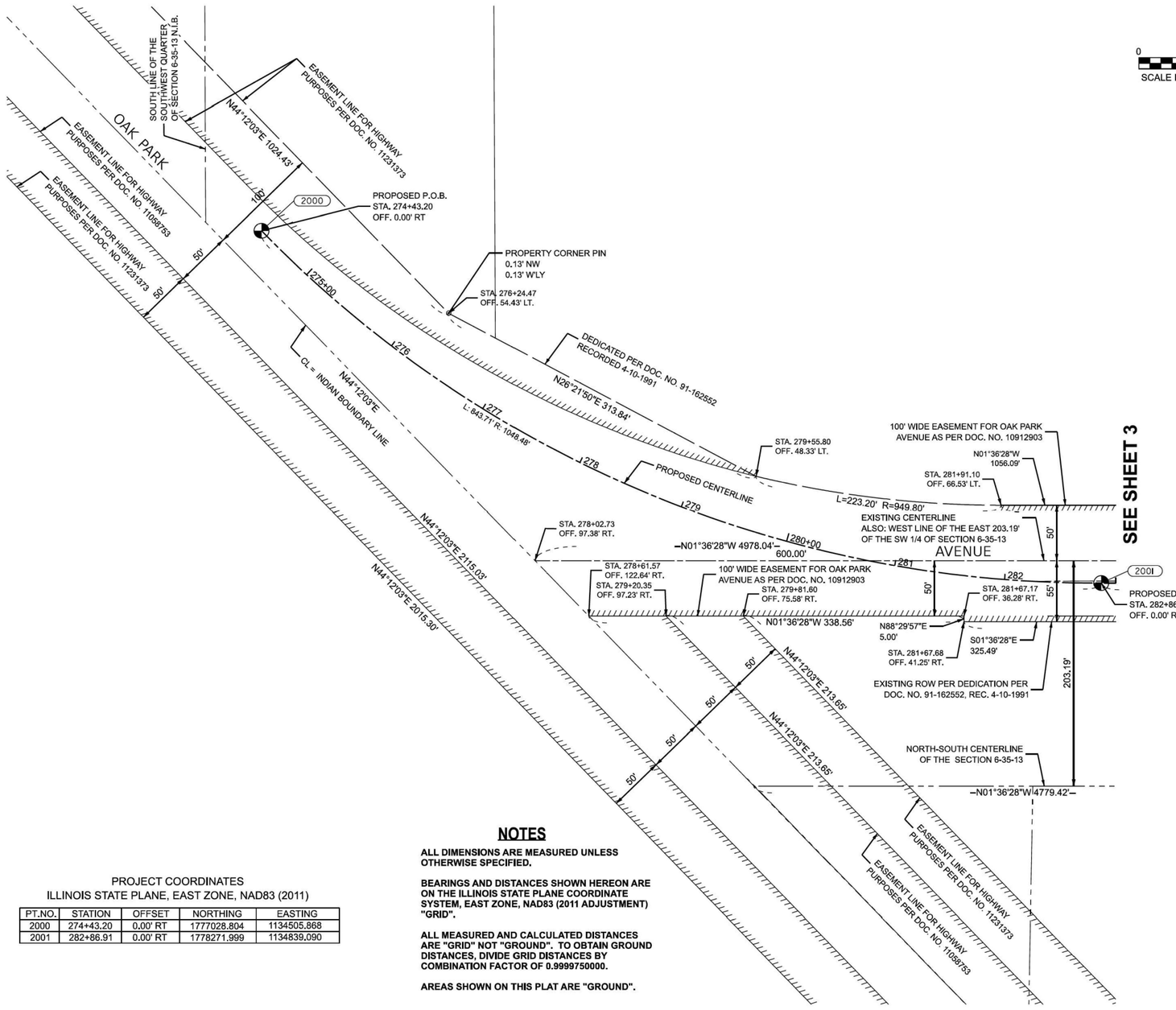

0 50 100 150
SCALE IN FEET

RIGHT-OF-WAY LEGEND

- SECTION CORNERS
- QUARTER SECTION CORNERS
- EXISTING CENTERLINE
- EXISTING RIGHT-OF-WAY LINE
- FORMER RIGHT-OF-WAY LINE
- EXISTING IDOT EASEMENT LINE
- EXISTING EASEMENT LINE
- BUILDING SETBACK LINE
- EXISTING ACCESS CONTROL LINE
- EXISTING RIGHT-OF-WAY & PROPOSED ACCESS CONTROL LINE
- PROPOSED CENTERLINE
- PROPOSED RIGHT-OF-WAY LINE
- PROPOSED TEMPORARY EASEMENT LINE
- PROPOSED PERMANENT EASEMENT LINE
- SECTION LINE
- QUARTER SECTION LINE
- QUARTER QUARTER SECTION LINE
- PROPERTY LINE (TITLE)
- RECORDED PLAT/DEED LINE
- APPARENT PROPERTY LINE
- SAME OWNERSHIP
- 121.45' MEASURED DIMENSION
- (121.45') RECORDED DIMENSION
- FOUND STONE
- FOUND IRON PIPE OR IRON ROD AT CORNER UNLESS OTHERWISE NOTED
- SET 5/8 INCH IRON ROD WITH PLASTIC CAP IDENTIFIED BY SURVEYORS LICENSE NUMBER AT CORNER UNLESS OTHERWISE NOTED
- PERMANENT SURVEY MONUMENT, I.D.O.T. STD. 667101 (TO BE SET BY OTHERS)
- SET 5/8 INCH IRON ROD AS SURVEY CONTROL UNLESS OTHERWISE NOTED
- FOUND CUT CROSS
- SET CUT CROSS

■ STAKING OF PROPOSED RIGHT-OF-WAY AND PERMANENT EASEMENT CORNERS. SET 5/8 INCH METAL ROD WITH DEPARTMENT OF TRANSPORTATION SURVEY ALUMINUM CAP TO MONUMENT THE POSITION SHOWN. IDENTIFIED BY INSCRIPTION DATA AND SURVEYORS LICENSE NUMBER.

■ B STAKING OF PROPOSED RIGHT-OF-WAY AND PERMANENT EASEMENT CORNERS IN CULTIVATED AREA, A MINIMUM OF 20 INCHES BELOW THE GROUND SURFACE. SET 5/8 INCH METAL ROD WITH DIVISION OF HIGHWAY SURVEY ALUMINUM CAP TO MONUMENT THE POSITION SHOWN. IDENTIFIED BY INSCRIPTION DATA AND SURVEYORS LICENSE NUMBER.

PROJECT COORDINATES
ILLINOIS STATE PLANE, EAST ZONE, NAD83 (2011)

PT.NO.	STATION	OFFSET	NORTHING	EASTING
2000	274+43.20	0.00' RT	1777028.804	1134505.868
2001	282+86.91	0.00' RT	1778271.999	1134839.090

NOTES

ALL DIMENSIONS ARE MEASURED UNLESS OTHERWISE SPECIFIED.

BEARINGS AND DISTANCES SHOWN HEREON ARE ON THE ILLINOIS STATE PLANE COORDINATE SYSTEM, EAST ZONE, NAD83 (2011 ADJUSTMENT) "GRID".

ALL MEASURED AND CALCULATED DISTANCES ARE "GRID" NOT "GROUND". TO OBTAIN GROUND DISTANCES, DIVIDE GRID DISTANCES BY COMBINATION FACTOR OF 0.9999750000.

AREAS SHOWN ON THIS PLAT ARE "GROUND".

STATE OF ILLINOIS)
) SS
COUNTY OF COOK)

I, BRADLEY K. LUEDERS, AN ILLINOIS PROFESSIONAL LAND SURVEYOR, STATE THAT I HAVE SURVEYED THE PLAT OF HIGHWAY SHOWN HEREON AND THAT THIS PROFESSIONAL SERVICE CONFORMS TO THE CURRENT ILLINOIS MINIMUM STANDARDS FOR A BOUNDARY SURVEY FOR THE PROPOSED PARCEL(S) TO BE ACQUIRED BY THE STATE OF ILLINOIS, DEPARTMENT OF TRANSPORTATION, SHOWN HEREON.

DATED NOVEMBER 25, 2024

Bradley K. Lueders

BRADLEY K. LUEDERS, PLS NO. 035-003406
LICENSE EXPIRATION DATE: 11/30/2024

BRADLEY K. LUEDERS 035-003406 PROFESSIONAL LAND SURVEYOR STATE OF ILLINOIS SOUTH HOLLAND, ILLINOIS

MODEL: ExCiL - Plan 2 [Sheet]
FILE NAME: N:\PROJECTS\2021\21-R0862.08_IDOT_TINLEY_PARK_INTERSTATE_80_OAK_PARK_AVENUE_WORK_ORDER_08\MICROSTATION\21R0862_08eALGN.dgn

Robinson ENGINEERING 17000 SOUTH PARK AVENUE SOUTH HOLLAND, IL 60473 (708) 331-6700	USER NAME = kmuhr	DESIGNED -	REVISED -	ILLINOIS DEPARTMENT OF TRANSPORTATION PLAT OF HIGHWAYS
		DRAWN - KWM	REVISED -	
	PLOT SCALE = $SCALE$	CHECKED - BKL	REVISED -	
	PLOT DATE = 11/24/2024	DATE - 09/09/24	REVISED -	

ROUTE	SECTION 6	COUNTY COOK	JOB# R-90-008-21
SEC	T 35 , R 13E OF 3RD P.M.	PROJECT#	OAK PARK AVENUE AT INTERSTATE 80
SCALE: 1"=50'	SHEET NO. 2 OF 9 SHEETS	STA 50+00.00	TO STA 55+00.00 CONTRACT NO.

MODEL: Plat 2 [Sheet]
FILE NAME: c:\pwworking\primeral\pwprod\kludzia\dms617751\D162W20-Plat of Highway 2.dgn

Ardmore Roderick	USER NAME = kingaludzia	DESIGNED - KL	REVISED -	STATE OF ILLINOIS DEPARTMENT OF TRANSPORTATION
		DRAWN - KL	REVISED -	
		CHECKED - STB	REVISED -	
	PLOT DATE = 5/6/2026	DATE - 5/6/2026	REVISED -	

OAK PARK AVENUE OVER I-80 PLAT OF HIGHWAYS			
SCALE:	SHEET 2 OF 9 SHEETS	STA.	TO STA.

F.A.I RTE.	SECTION	COUNTY	TOTAL SHEETS	SHEET NO.
80	FAI 80 23 Bridge Replacement 2	COOK	158	55
		CONTRACT NO. 62W20		
	ILLINOIS FED. AID PROJECT			

PART OF SECTION 6, TWP. 35 N., R. 13 E. OF THE 3RD. P.M., IN COOK COUNTY, ILLINOIS.

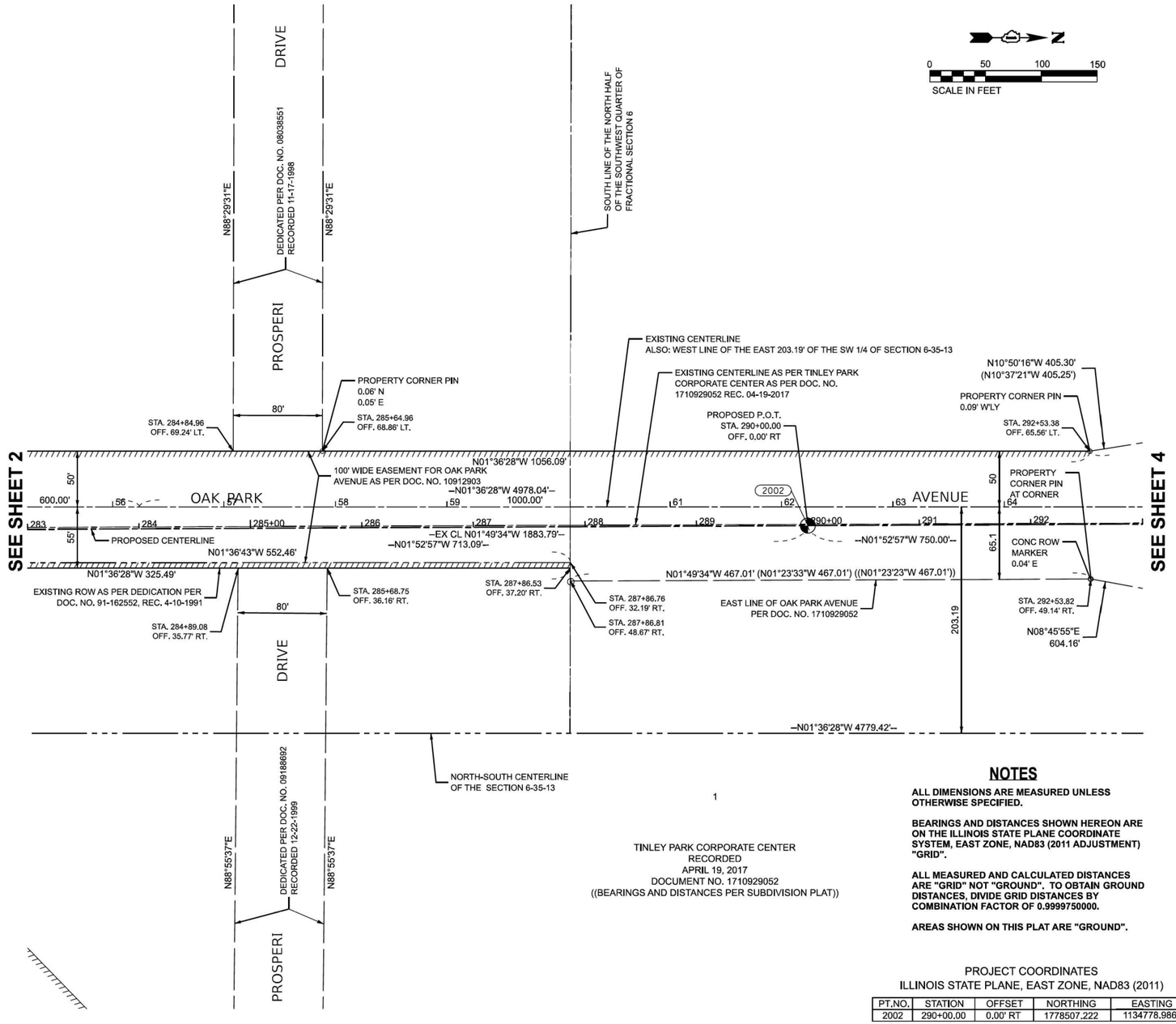

1

TINLEY PARK CORPORATE CENTER
RECORDED
APRIL 19, 2017
DOCUMENT NO. 1710929052
((BEARINGS AND DISTANCES PER SUBDIVISION PLAT))

NOTES

ALL DIMENSIONS ARE MEASURED UNLESS OTHERWISE SPECIFIED.

BEARINGS AND DISTANCES SHOWN HEREON ARE ON THE ILLINOIS STATE PLANE COORDINATE SYSTEM, EAST ZONE, NAD83 (2011 ADJUSTMENT) "GRID".

ALL MEASURED AND CALCULATED DISTANCES ARE "GRID" NOT "GROUND". TO OBTAIN GROUND DISTANCES, DIVIDE GRID DISTANCES BY COMBINATION FACTOR OF 0.9999750000.

AREAS SHOWN ON THIS PLAT ARE "GROUND".

PROJECT COORDINATES
ILLINOIS STATE PLANE, EAST ZONE, NAD83 (2011)

PT.NO.	STATION	OFFSET	NORTHING	EASTING
2002	290+00.00	0.00' RT	1778507.222	1134778.986

RIGHT-OF-WAY LEGEND

- SECTION CORNERS
- QUARTER SECTION CORNERS
- EXISTING CENTERLINE
- EXISTING RIGHT-OF-WAY LINE
- FORMER RIGHT-OF-WAY LINE
- EXISTING IDOT EASEMENT LINE
- EXISTING EASEMENT LINE
- BUILDING SETBACK LINE
- AC — EXISTING ACCESS CONTROL LINE
- AC — EXISTING RIGHT-OF-WAY & PROPOSED ACCESS CONTROL LINE
- PROPOSED CENTERLINE
- PROPOSED RIGHT-OF-WAY LINE
- PROPOSED TEMPORARY EASEMENT LINE
- PROPOSED PERMANENT EASEMENT LINE
- SECTION LINE
- QUARTER SECTION LINE
- QUARTER QUARTER SECTION LINE
- PL — PROPERTY LINE (TITLE)
- RECORDED PLAT/DEED LINE
- APL — APPARENT PROPERTY LINE
- SAME OWNERSHIP
- 121.45' — MEASURED DIMENSION
- (121.45') — RECORDED DIMENSION
- FOUND STONE
- FOUND IRON PIPE OR IRON ROD AT CORNER UNLESS OTHERWISE NOTED
- SET 5/8 INCH IRON ROD WITH PLASTIC CAP IDENTIFIED BY SURVEYORS LICENSE NUMBER AT CORNER UNLESS OTHERWISE NOTED
- PERMANENT SURVEY MONUMENT, I.D.O.T. STD. 667101 (TO BE SET BY OTHERS)
- SET 5/8 INCH IRON ROD AS SURVEY CONTROL UNLESS OTHERWISE NOTED
- FOUND CUT CROSS
- SET CUT CROSS

■ STAKING OF PROPOSED RIGHT-OF-WAY AND PERMANENT EASEMENT CORNERS, SET 5/8 INCH METAL ROD WITH DEPARTMENT OF TRANSPORTATION SURVEY ALUMINUM CAP TO MONUMENT THE POSITION SHOWN. IDENTIFIED BY INSCRIPTION DATA AND SURVEYORS LICENSE NUMBER.

■ B STAKING OF PROPOSED RIGHT-OF-WAY AND PERMANENT EASEMENT CORNERS IN CULTIVATED AREA, A MINIMUM OF 20 INCHES BELOW THE GROUND SURFACE. SET 5/8 INCH METAL ROD WITH DIVISION OF HIGHWAY SURVEY ALUMINUM CAP TO MONUMENT THE POSITION SHOWN. IDENTIFIED BY INSCRIPTION DATA AND SURVEYORS LICENSE NUMBER.

STATE OF ILLINOIS)
) SS
COUNTY OF COOK)

I, BRADLEY K. LUEDERS, AN ILLINOIS PROFESSIONAL LAND SURVEYOR, STATE THAT I HAVE SURVEYED THE PLAT OF HIGHWAY SHOWN HEREON AND THAT THIS PROFESSIONAL SERVICE CONFORMS TO THE CURRENT ILLINOIS MINIMUM STANDARDS FOR A BOUNDARY SURVEY FOR THE PROPOSED PARCEL(S) TO BE ACQUIRED BY THE STATE OF ILLINOIS, DEPARTMENT OF TRANSPORTATION, SHOWN HEREON.

DATED NOVEMBER 25, 2024

BRADLEY K. LUEDERS, PLS NO. 035-003406
LICENSE EXPIRATION DATE: 11/30/2024

BRADLEY K. LUEDERS 035-003406 PROFESSIONAL LAND SURVEYOR STATE OF ILLINOIS SOUTH HOLLAND, ILLINOIS

Robinson ENGINEERING
17000 SOUTH PARK AVENUE
SOUTH HOLLAND, IL 60473
(708) 331-6700

USER NAME = kmuhr	DESIGNED -		REVISED -
	DRAWN - KWM		REVISED -
PLOT SCALE = $SCALE$	CHECKED - BKL		REVISED -
PLOT DATE = 11/24/2024	DATE - 09/09/24		REVISED -

ILLINOIS DEPARTMENT OF TRANSPORTATION
PLAT OF HIGHWAYS

ROUTE	SECTION 6	COUNTY COOK JOB# R-90-008-21
SEC	T 35 , R 13E OF 3RD P.M.	PROJECT# OAK PARK AVENUE AT INTERSTATE 80
SCALE: 1"=50'	SHEET NO. 3 OF 9 SHEETS	STA 50+00.00 TO STA 55+00.00 CONTRACT NO.

Ardmore Roderick

USER NAME = kingaludzia	DESIGNED - KL		REVISED -
	DRAWN - KL		REVISED -
	CHECKED - STB		REVISED -
PLOT DATE = 5/6/2026	DATE - 5/6/2026		REVISED -

STATE OF ILLINOIS
DEPARTMENT OF TRANSPORTATION

OAK PARK AVENUE OVER I-80
PLAT OF HIGHWAYS

SCALE: SHEET 3 OF 9 SHEETS STA. TO STA.

F.A.I RTE.	SECTION	COUNTY	TOTAL SHEETS	SHEET NO.
80	FAI 80 23 Bridge Replacement 2	COOK	158	56
		CONTRACT NO. 62W20		
	ILLINOIS FED. AID PROJECT			

MODEL: Plat 3 [Sheet]
FILE NAME: c:\pwworking\ptmeral\pwprod\kludzia\dms617751\D162W20-Plat of Highway 3.dgn

MODEL: ExCiL - Plan 3 [Sheet]
FILE NAME: N:\PROJECTS\2021\12-R0862.08_IDOT_TINLEY_PARK_INTERSTATE_80_OAK_PARK_AVENUE_WORK_ORDER_08\MICROSTATION\21R0862_08A4.GN.dgn

PART OF SECTION 6, TWP. 35 N., R. 13 E. OF THE 3RD. P.M., IN COOK COUNTY, ILLINOIS.

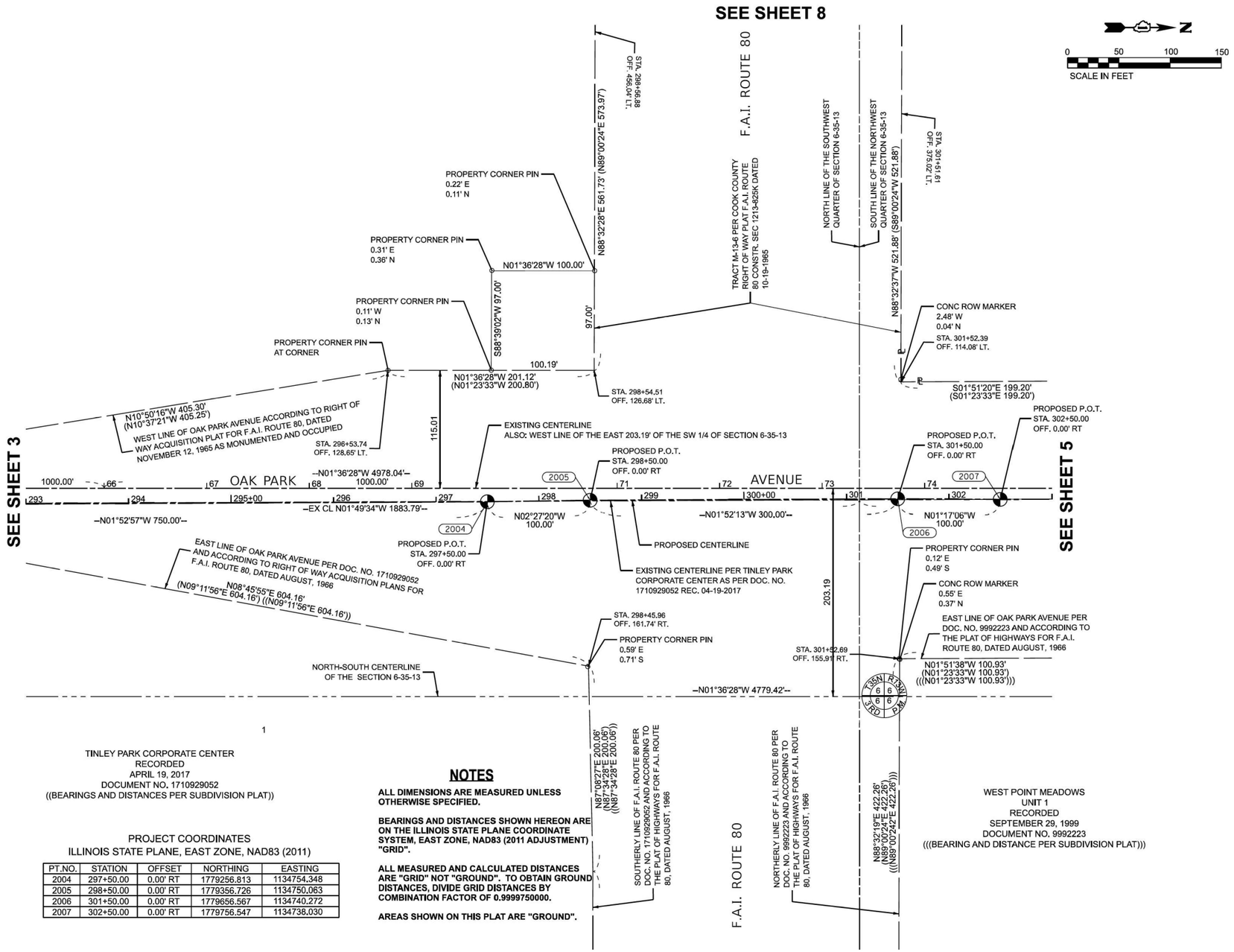

PROJECT COORDINATES
ILLINOIS STATE PLANE, EAST ZONE, NAD83 (2011)

PT.NO.	STATION	OFFSET	NORTHING	EASTING
2004	297+50.00	0.00' RT	1779256.813	1134754.348
2005	298+50.00	0.00' RT	1779356.726	1134750.063
2006	301+50.00	0.00' RT	1779656.567	1134740.272
2007	302+50.00	0.00' RT	1779756.547	1134738.030

NOTES

ALL DIMENSIONS ARE MEASURED UNLESS OTHERWISE SPECIFIED.

BEARINGS AND DISTANCES SHOWN HEREON ARE ON THE ILLINOIS STATE PLANE COORDINATE SYSTEM, EAST ZONE, NAD83 (2011 ADJUSTMENT) "GRID".

ALL MEASURED AND CALCULATED DISTANCES ARE "GRID" NOT "GROUND". TO OBTAIN GROUND DISTANCES, DIVIDE GRID DISTANCES BY COMBINATION FACTOR OF 0.9999750000.

AREAS SHOWN ON THIS PLAT ARE "GROUND".

RIGHT-OF-WAY LEGEND

- SECTION CORNERS
- QUARTER SECTION CORNERS
- EXISTING CENTERLINE
- EXISTING RIGHT-OF-WAY LINE
- FORMER RIGHT-OF-WAY LINE
- EXISTING IDOT EASEMENT LINE
- EXISTING EASEMENT LINE
- BUILDING SETBACK LINE
- EXISTING ACCESS CONTROL LINE
- EXISTING RIGHT-OF-WAY & PROPOSED ACCESS CONTROL LINE
- PROPOSED CENTERLINE
- PROPOSED RIGHT-OF-WAY LINE
- PROPOSED TEMPORARY EASEMENT LINE
- PROPOSED PERMANENT EASEMENT LINE
- SECTION LINE
- QUARTER SECTION LINE
- QUARTER QUARTER SECTION LINE
- PROPERTY LINE (TITLE)
- RECORDED PLAT/DEED LINE
- APPARENT PROPERTY LINE
- SAME OWNERSHIP
- 121.45' MEASURED DIMENSION
- (121.45') RECORDED DIMENSION
- FOUND STONE
- FOUND IRON PIPE OR IRON ROD AT CORNER UNLESS OTHERWISE NOTED
- SET 5/8 INCH IRON ROD WITH PLASTIC CAP IDENTIFIED BY SURVEYORS LICENSE NUMBER AT CORNER UNLESS OTHERWISE NOTED
- PERMANENT SURVEY MONUMENT, I.D.O.T. STD. 667101 (TO BE SET BY OTHERS)
- SET 5/8 INCH IRON ROD AS SURVEY CONTROL UNLESS OTHERWISE NOTED
- + FOUND CUT CROSS
- + SET CUT CROSS

■ STAKING OF PROPOSED RIGHT-OF-WAY AND PERMANENT EASEMENT CORNERS, SET 5/8 INCH METAL ROD WITH DEPARTMENT OF TRANSPORTATION SURVEY ALUMINUM CAP TO MONUMENT THE POSITION SHOWN. IDENTIFIED BY INSCRIPTION DATA AND SURVEYORS LICENSE NUMBER.

■ B STAKING OF PROPOSED RIGHT-OF-WAY AND PERMANENT EASEMENT CORNERS IN CULTIVATED AREA, A MINIMUM OF 20 INCHES BELOW THE GROUND SURFACE. SET 5/8 INCH METAL ROD WITH DIVISION OF HIGHWAY SURVEY ALUMINUM CAP TO MONUMENT THE POSITION SHOWN. IDENTIFIED BY INSCRIPTION DATA AND SURVEYORS LICENSE NUMBER.

STATE OF ILLINOIS)
) SS
COUNTY OF COOK)

I, BRADLEY K. LUEDERS, AN ILLINOIS PROFESSIONAL LAND SURVEYOR, STATE THAT I HAVE SURVEYED THE PLAT OF HIGHWAY SHOWN HEREON AND THAT THIS PROFESSIONAL SERVICE CONFORMS TO THE CURRENT ILLINOIS MINIMUM STANDARDS FOR A BOUNDARY SURVEY FOR THE PROPOSED PARCEL(S) TO BE ACQUIRED BY THE STATE OF ILLINOIS, DEPARTMENT OF TRANSPORTATION, SHOWN HEREON.

DATED NOVEMBER 25, 2024

Bradley K. Lueders

BRADLEY K. LUEDERS, PLS NO. 035-003406
LICENSE EXPIRATION DATE: 11/30/2024

BRADLEY K. LUEDERS 035-003406 PROFESSIONAL LAND SURVEYOR STATE OF ILLINOIS SOUTH HOLLAND, ILLINOIS

MODEL: ExCiv Plan 4 [Sheet]
FILE NAME: N:\PROJECTS\2022\212-R90\62.08_IDOT_TINLEY_PARK_INTERSTATE_80_OAK_PARK_AVENUE_WORK_ORDER_DRIMICROSTATION\212R90B2_08-ALGN.dgn

Robinson ENGINEERING 17000 SOUTH PARK AVENUE SOUTH HOLLAND, IL 60473 (708) 331-8700	USER NAME = kmuhr	DESIGNED -	REVISED -
		DRAWN - KWM	REVISED -
	PLOT SCALE = $SCALE$	CHECKED - BKL	REVISED -
	PLOT DATE = 11/24/2024	DATE - 09/09/24	REVISED -

ILLINOIS DEPARTMENT OF TRANSPORTATION
PLAT OF HIGHWAYS

ROUTE	SECTION 6	COUNTY COOK	JOB# R-90-008-21
SEC	T 35 , R 13E OF 3RD P.M.	PROJECT#	OAK PARK AVENUE AT INTERSTATE 80
SCALE: 1"=50'	SHEET NO. 4 OF 9 SHEETS	STA 65+00.00	TO STA 75+00.00 CONTRACT NO.

MODEL: Plat 4 [Sheet]
FILE NAME: c:\pwworking\primera\pwprod\kludzia\dms617511\D162W20-Plat of Highway 4.dgn

Ardmore Roderick

USER NAME = kingaludzia	DESIGNED - KL	REVISED -	
	DRAWN - KL	REVISED -	
	CHECKED - STB	REVISED -	
PLOT DATE = 5/6/2026	DATE - 5/6/2026	REVISED -	

STATE OF ILLINOIS
DEPARTMENT OF TRANSPORTATION

OAK PARK AVENUE OVER I-80
PLAT OF HIGHWAYS
SHEET 4 OF 9 SHEETS

F.A.I RTE.	SECTION	COUNTY	TOTAL SHEETS	SHEET NO.
80	FAI 80 23 Bridge Replacement 2	COOK	158	57
		CONTRACT NO. 62W20		
	ILLINOIS FED. AID PROJECT			

PART OF SECTION 6, TWP. 35 N., R. 13 E. OF THE 3RD. P.M., IN COOK COUNTY, ILLINOIS.

PARCEL NO.	TOTAL HOLDING	FEE SIMPLE ACQUISITION				REMAINDER	EASEMENTS			PARCEL INDEX NUMBER	
		GROSS		PREVIOUSLY DEDICATED			PE = PERMANENT TE = TEMPORARY		EASEMENT PURPOSE		
	ACRES	ACRES	SQ FT	ACRES	SQ FT	ACRES	ACRES	SQ FT			
00821001	23.682 [1]	0.113				23.569				31-06-101-007-0000 31-06-101-008-0000	

PROJECT COORDINATES
ILLINOIS STATE PLANE, EAST ZONE, NAD83 (2011)

PT.NO.	STATION	OFFSET	NORTHING	EASTING
2008	312+00.00	0.00' RT	1780706.041	1134707.231
3000	306+24.73	75.50' LT	1780128.619	1134650.174
3001	309+79.09	74.20' LT	1780482.845	1134640.232

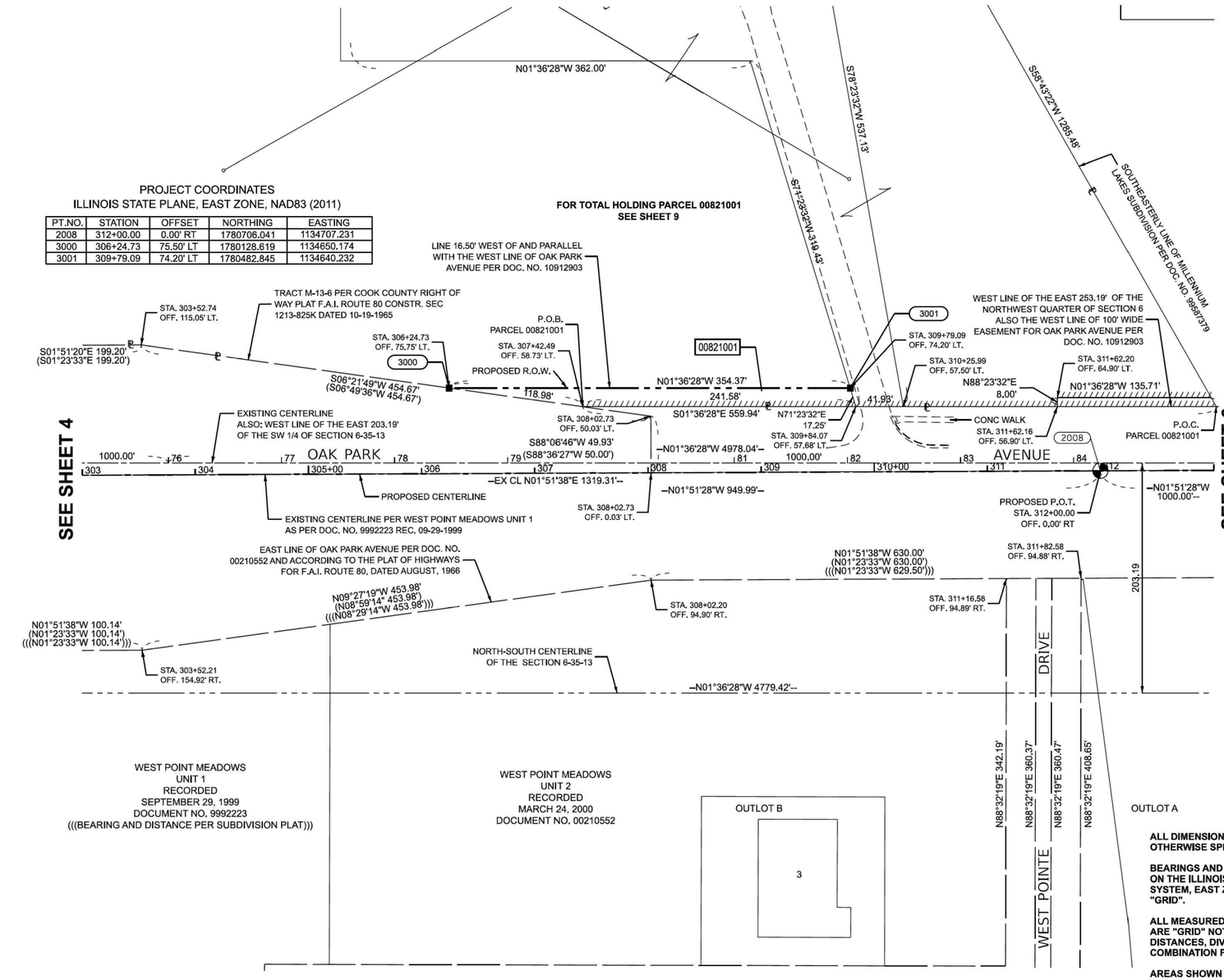

RIGHT-OF-WAY LEGEND

SECTION CORNERS — QUARTER SECTION CORNERS

0 50 100 150
SCALE IN FEET

- EXISTING CENTERLINE
- EXISTING RIGHT-OF-WAY LINE
- FORMER RIGHT-OF-WAY LINE
- EXISTING IDOT EASEMENT LINE
- EXISTING EASEMENT LINE
- BUILDING SETBACK LINE
- AC — EXISTING ACCESS CONTROL LINE
- AC — EXISTING RIGHT-OF-WAY & PROPOSED ACCESS CONTROL LINE
- PROPOSED CENTERLINE
- PROPOSED RIGHT-OF-WAY LINE
- PROPOSED TEMPORARY EASEMENT LINE
- PROPOSED PERMANENT EASEMENT LINE
- SECTION LINE
- QUARTER SECTION LINE
- QUARTER QUARTER SECTION LINE
- ℄ PROPERTY LINE (TITLE)
- RECORDED PLAT/DEED LINE
- APL — APPARENT PROPERTY LINE
- SAME OWNERSHIP
- 121.45' MEASURED DIMENSION
- (121.45') RECORDED DIMENSION
- □ FOUND STONE
- ○ FOUND IRON PIPE OR IRON ROD AT CORNER UNLESS OTHERWISE NOTED
- ● SET 5/8 INCH IRON ROD WITH PLASTIC CAP IDENTIFIED BY SURVEYORS LICENSE NUMBER AT CORNER UNLESS OTHERWISE NOTED
- PERMANENT SURVEY MONUMENT, I.D.O.T. STD. 667101 (TO BE SET BY OTHERS)
- △ SET 5/8 INCH IRON ROD AS SURVEY CONTROL UNLESS OTHERWISE NOTED
- \+ FOUND CUT CROSS
- \+ SET CUT CROSS

■ STAKING OF PROPOSED RIGHT-OF-WAY AND PERMANENT EASEMENT CORNERS, SET 5/8 INCH METAL ROD WITH DEPARTMENT OF TRANSPORTATION SURVEY ALUMINUM CAP TO MONUMENT THE POSITION SHOWN. IDENTIFIED BY INSCRIPTION DATA AND SURVEYORS LICENSE NUMBER.

■ B STAKING OF PROPOSED RIGHT-OF-WAY AND PERMANENT EASEMENT CORNERS IN CULTIVATED AREA, A MINIMUM OF 20 INCHES BELOW THE GROUND SURFACE. SET 5/8 INCH METAL ROD WITH DIVISION OF HIGHWAY SURVEY ALUMINUM CAP TO MONUMENT THE POSITION SHOWN. IDENTIFIED BY INSCRIPTION DATA AND SURVEYORS LICENSE NUMBER.

NOTES

ALL DIMENSIONS ARE MEASURED UNLESS OTHERWISE SPECIFIED.

BEARINGS AND DISTANCES SHOWN HEREON ARE ON THE ILLINOIS STATE PLANE COORDINATE SYSTEM, EAST ZONE, NAD83 (2011 ADJUSTMENT) "GRID".

ALL MEASURED AND CALCULATED DISTANCES ARE "GRID" NOT "GROUND". TO OBTAIN GROUND DISTANCES, DIVIDE GRID DISTANCES BY COMBINATION FACTOR OF 0.9999750000.

AREAS SHOWN ON THIS PLAT ARE "GROUND".

STATE OF ILLINOIS)
) SS
COUNTY OF COOK)

I, BRADLEY K. LUEDERS, AN ILLINOIS PROFESSIONAL LAND SURVEYOR, STATE THAT I HAVE SURVEYED THE PLAT OF HIGHWAY SHOWN HEREON AND THAT THIS PROFESSIONAL SERVICE CONFORMS TO THE CURRENT ILLINOIS MINIMUM STANDARDS FOR A BOUNDARY SURVEY FOR THE PROPOSED PARCEL(S) TO BE ACQUIRED BY THE STATE OF ILLINOIS, DEPARTMENT OF TRANSPORTATION, SHOWN HEREON.

DATED NOVEMBER 25, 2024

Bradley K. Lueders

BRADLEY K. LUEDERS, PLS NO. 035-003406
LICENSE EXPIRATION DATE: 11/30/2024

BRADLEY K. LUEDERS 035-003406 PROFESSIONAL LAND SURVEYOR STATE OF ILLINOIS SOUTH HOLLAND, ILLINOIS

MODEL: FxDLP_Plat 5 [Sheet]
FILE NAME: M:\PROJECTS\2021\2102-R\0902.05_IDOT_TINLEY_PARK_INTERSTATE_80_OAK_PARK_AVENUE_WORK_ORDER_0\MICROSTATION\21R0902_05-ALGN.dgn

Robinson ENGINEERING
17000 SOUTH PARK AVENUE
SOUTH HOLLAND, IL 60473
(708) 331-8700

USER NAME = kmuhr	DESIGNED -		REVISED -
	DRAWN - KWM		REVISED -
PLOT SCALE = $SCALE$	CHECKED - BKL		REVISED -
PLOT DATE = 11/24/2024	DATE - 09/09/24		REVISED -

ILLINOIS DEPARTMENT OF TRANSPORTATION
PLAT OF HIGHWAYS

ROUTE	SECTION 6	COUNTY COOK	JOB# R-90-008-21
SEC	T 35 , R 13E OF 3RD P.M.	PROJECT#	OAK PARK AVENUE AT INTERSTATE 80
SCALE: 1"=50'	SHEET NO. 5 OF 9 SHEETS	STA 75+00.00	TO STA 85+00.00 CONTRACT NO.

MODEL: Plat 5 [Sheet]
FILE NAME: c:\pwworking\primera\pwprod\kludzia\dms617511\D162W20-Plat of Highway 5.dgn

Ardmore Roderick

USER NAME = kingaludzia	DESIGNED - KL		REVISED -
	DRAWN - KL		REVISED -
	CHECKED - STB		REVISED -
PLOT DATE = 5/6/2026	DATE - 5/6/2026		REVISED -

STATE OF ILLINOIS
DEPARTMENT OF TRANSPORTATION

OAK PARK AVENUE OVER I-80
PLAT OF HIGHWAYS
SHEET 5 OF 9 SHEETS

F.A.I RTE.	SECTION	COUNTY	TOTAL SHEETS	SHEET NO.
80	FAI 80 23 Bridge Replacement 2	COOK	158	58
		CONTRACT NO. 62W20		
	ILLINOIS	FED. AID PROJECT		

PART OF SECTION 6, TWP. 35 N., R. 13 E. OF THE 3RD. P.M., IN COOK COUNTY, ILLINOIS.

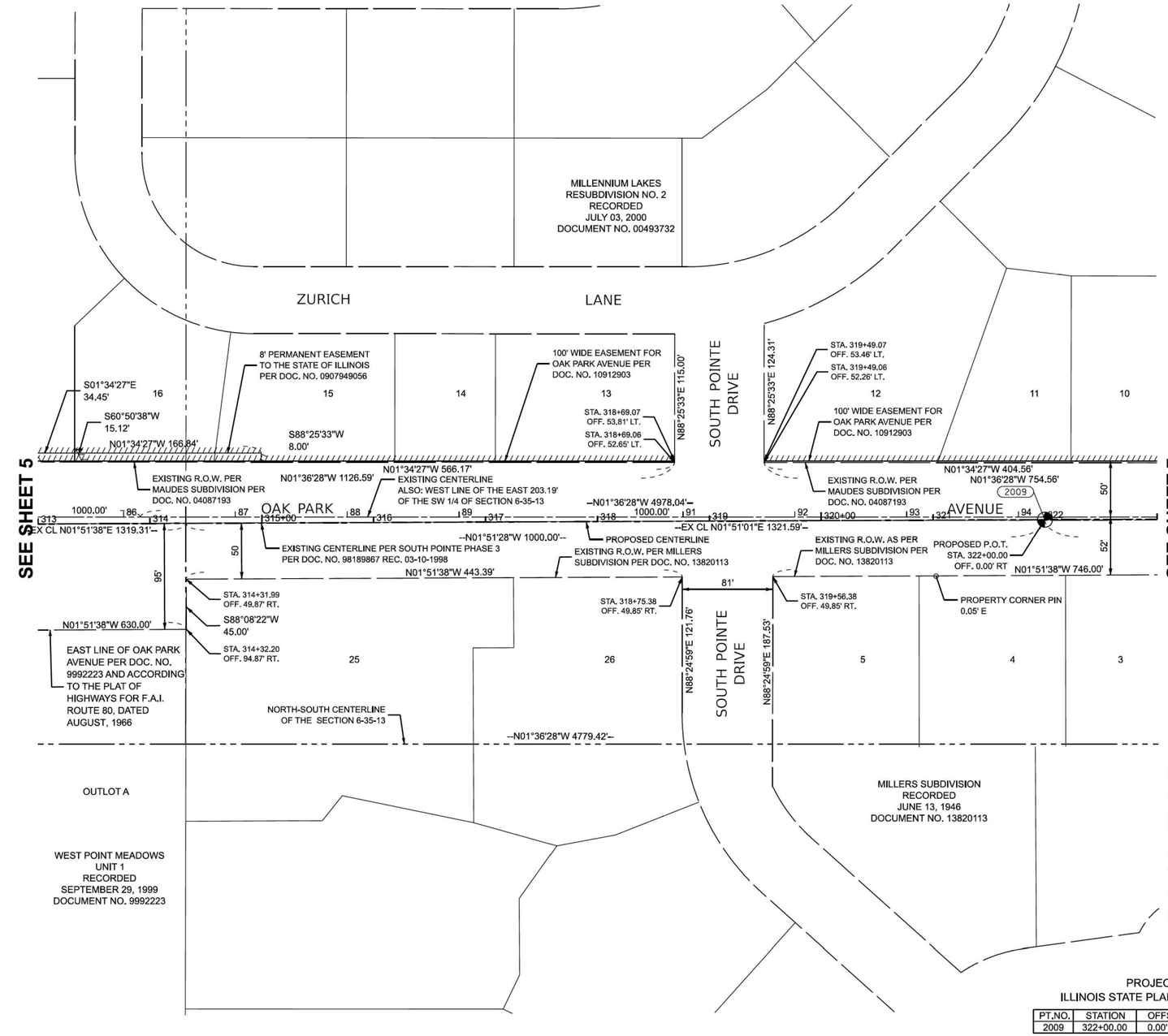

RIGHT-OF-WAY LEGEND

- SECTION CORNERS
- QUARTER SECTION CORNERS
- EXISTING CENTERLINE
- EXISTING RIGHT-OF-WAY LINE
- FORMER RIGHT-OF-WAY LINE
- EXISTING IDOT EASEMENT LINE
- EXISTING EASEMENT LINE
- BUILDING SETBACK LINE
- EXISTING ACCESS CONTROL LINE
- EXISTING RIGHT-OF-WAY & PROPOSED ACCESS CONTROL LINE
- PROPOSED CENTERLINE
- PROPOSED RIGHT-OF-WAY LINE
- PROPOSED TEMPORARY EASEMENT LINE
- PROPOSED PERMANENT EASEMENT LINE
- SECTION LINE
- QUARTER SECTION LINE
- QUARTER QUARTER SECTION LINE
- PROPERTY LINE (TITLE)
- RECORDED PLAT/DEED LINE
- APPARENT PROPERTY LINE
- SAME OWNERSHIP
- 121.45' MEASURED DIMENSION
- (121.45') RECORDED DIMENSION
- FOUND STONE
- FOUND IRON PIPE OR IRON ROD AT CORNER UNLESS OTHERWISE NOTED
- SET 5/8 INCH IRON ROD WITH PLASTIC CAP IDENTIFIED BY SURVEYORS LICENSE NUMBER AT CORNER UNLESS OTHERWISE NOTED
- PERMANENT SURVEY MONUMENT, I.D.O.T. STD. 667101 (TO BE SET BY OTHERS)
- SET 5/8 INCH IRON ROD AS SURVEY CONTROL UNLESS OTHERWISE NOTED
- FOUND CUT CROSS
- SET CUT CROSS

■ STAKING OF PROPOSED RIGHT-OF-WAY AND PERMANENT EASEMENT CORNERS. SET 5/8 INCH METAL ROD WITH DEPARTMENT OF TRANSPORTATION SURVEY ALUMINUM CAP TO MONUMENT THE POSITION SHOWN. IDENTIFIED BY INSCRIPTION DATA AND SURVEYORS LICENSE NUMBER.

■ B STAKING OF PROPOSED RIGHT-OF-WAY AND PERMANENT EASEMENT CORNERS IN CULTIVATED AREA, A MINIMUM OF 20 INCHES BELOW THE GROUND SURFACE. SET 5/8 INCH METAL ROD WITH DIVISION OF HIGHWAY SURVEY ALUMINUM CAP TO MONUMENT THE POSITION SHOWN. IDENTIFIED BY INSCRIPTION DATA AND SURVEYORS LICENSE NUMBER.

NOTES

ALL DIMENSIONS ARE MEASURED UNLESS OTHERWISE SPECIFIED.

BEARINGS AND DISTANCES SHOWN HEREON ARE ON THE ILLINOIS STATE PLANE COORDINATE SYSTEM, EAST ZONE, NAD83 (2011 ADJUSTMENT) "GRID".

ALL MEASURED AND CALCULATED DISTANCES ARE "GRID" NOT "GROUND". TO OBTAIN GROUND DISTANCES, DIVIDE GRID DISTANCES BY COMBINATION FACTOR OF 0.9999750000.

AREAS SHOWN ON THIS PLAT ARE "GROUND".

PROJECT COORDINATES
ILLINOIS STATE PLANE, EAST ZONE, NAD83 (2011)

PT.NO.	STATION	OFFSET	NORTHING	EASTING
2009	322+00.00	0.00' RT	1781705.515	1134674.811

STATE OF ILLINOIS)
) SS
COUNTY OF COOK)

I, BRADLEY K. LUEDERS, AN ILLINOIS PROFESSIONAL LAND SURVEYOR, STATE THAT I HAVE SURVEYED THE PLAT OF HIGHWAY SHOWN HEREON AND THAT THIS PROFESSIONAL SERVICE CONFORMS TO THE CURRENT ILLINOIS MINIMUM STANDARDS FOR A BOUNDARY SURVEY FOR THE PROPOSED PARCEL(S) TO BE ACQUIRED BY THE STATE OF ILLINOIS, DEPARTMENT OF TRANSPORTATION, SHOWN HEREON.

DATED NOVEMBER 25, 2024

BRADLEY K. LUEDERS, PLS NO. 035-003406
LICENSE EXPIRATION DATE: 11/30/2024

BRADLEY K. LUEDERS 035-003406 PROFESSIONAL LAND SURVEYOR STATE OF ILLINOIS SOUTH HOLLAND, ILLINOIS

Robinson ENGINEERING
17000 SOUTH PARK AVENUE
SOUTH HOLLAND, IL 60473
(708) 331-6700

USER NAME = kmuhr	DESIGNED -		REVISED -
	DRAWN - KWM		REVISED -
PLOT SCALE = $SCALE$	CHECKED - BKL		REVISED -
PLOT DATE = 11/24/2024	DATE - 09/09/24		REVISED -

ILLINOIS DEPARTMENT OF TRANSPORTATION
PLAT OF HIGHWAYS

ROUTE	SECTION 6	COUNTY COOK JOB# R-90-008-21
SEC	T 35 , R 13E OF 3RD P.M.	PROJECT# OAK PARK AVENUE AT INTERSTATE 80
SCALE: 1"=50'	SHEET NO. 6 OF 9 SHEETS	STA 85+00.00 TO STA 95+00.00 CONTRACT NO.

Ardmore Roderick

USER NAME = kingaludzia	DESIGNED - KL	REVISED -
	DRAWN - KL	REVISED -
	CHECKED - STB	REVISED -
PLOT DATE = 5/6/2026	DATE - 5/6/2026	REVISED -

STATE OF ILLINOIS
DEPARTMENT OF TRANSPORTATION

OAK PARK AVENUE OVER I-80
PLAT OF HIGHWAYS
SHEET 6 OF 9 SHEETS

F.A.I RTE.	SECTION	COUNTY	TOTAL SHEETS	SHEET NO.
80	FAI 80 23 Bridge Replacement 2	COOK	158	59
		CONTRACT NO. 62W20		
	ILLINOIS FED. AID PROJECT			

MODEL: Plat 6 [Sheet]
FILE NAME: c:\pwworking\primeralpwprod\kludzia\dms617751\D1162W20-Plat of Highway 6.dgn

MODEL: ExCiL - Plan 6 [Sheet]
FILE NAME: N:\PROJECTS\2021\21-R0862.08_IDOT_TINLEY_PARK_INTERSTATE_80_OAK_PARK_AVENUE_WORK_ORDER_08\MICROSTATION\21R0862_08eALGN.dgn

PART OF SECTION 6, TWP. 35 N., R. 13 E. OF THE 3RD. P.M., IN COOK COUNTY, ILLINOIS.

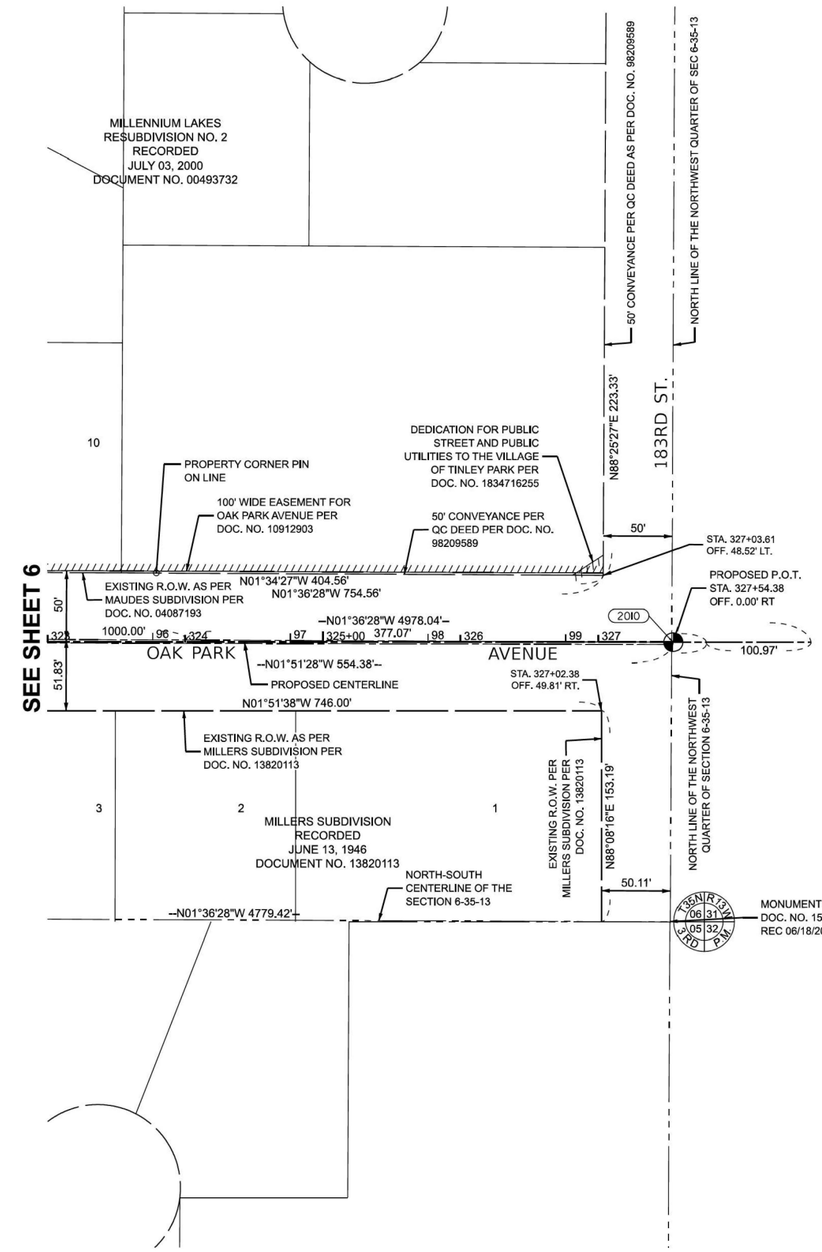

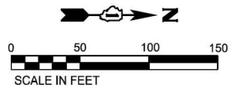

RIGHT-OF-WAY LEGEND

- SECTION CORNERS
- QUARTER SECTION CORNERS
- EXISTING CENTERLINE
- EXISTING RIGHT-OF-WAY LINE
- FORMER RIGHT-OF-WAY LINE
- EXISTING IDOT EASEMENT LINE
- EXISTING EASEMENT LINE
- BUILDING SETBACK LINE
- EXISTING ACCESS CONTROL LINE
- EXISTING RIGHT-OF-WAY & PROPOSED ACCESS CONTROL LINE
- PROPOSED CENTERLINE
- PROPOSED RIGHT-OF-WAY LINE
- PROPOSED TEMPORARY EASEMENT LINE
- PROPOSED PERMANENT EASEMENT LINE
- SECTION LINE
- QUARTER SECTION LINE
- QUARTER QUARTER SECTION LINE
- PROPERTY LINE (TITLE)
- RECORDED PLAT/DEED LINE
- APPARENT PROPERTY LINE
- SAME OWNERSHIP
- 121.45' MEASURED DIMENSION
- (121.45') RECORDED DIMENSION
- FOUND STONE
- FOUND IRON PIPE OR IRON ROD AT CORNER UNLESS OTHERWISE NOTED
- SET 5/8 INCH IRON ROD WITH PLASTIC CAP IDENTIFIED BY SURVEYORS LICENSE NUMBER AT CORNER UNLESS OTHERWISE NOTED
- PERMANENT SURVEY MONUMENT, I.D.O.T. STD. 667101 (TO BE SET BY OTHERS)
- SET 5/8 INCH IRON ROD AS SURVEY CONTROL UNLESS OTHERWISE NOTED
- FOUND CUT CROSS
- SET CUT CROSS

■ STAKING OF PROPOSED RIGHT-OF-WAY AND PERMANENT EASEMENT CORNERS. SET 5/8 INCH METAL ROD WITH DEPARTMENT OF TRANSPORTATION SURVEY ALUMINUM CAP TO MONUMENT THE POSITION SHOWN. IDENTIFIED BY INSCRIPTION DATA AND SURVEYORS LICENSE NUMBER.

■ B STAKING OF PROPOSED RIGHT-OF-WAY AND PERMANENT EASEMENT CORNERS IN CULTIVATED AREA, A MINIMUM OF 20 INCHES BELOW THE GROUND SURFACE. SET 5/8 INCH METAL ROD WITH DIVISION OF HIGHWAY SURVEY ALUMINUM CAP TO MONUMENT THE POSITION SHOWN. IDENTIFIED BY INSCRIPTION DATA AND SURVEYORS LICENSE NUMBER.

PROJECT COORDINATES
ILLINOIS STATE PLANE, EAST ZONE, NAD83 (2011)

PT.NO.	STATION	OFFSET	NORTHING	EASTING
2010	327+54.38	0.00' RT	1782259.588	1134656.890

NOTES

ALL DIMENSIONS ARE MEASURED UNLESS OTHERWISE SPECIFIED.

BEARINGS AND DISTANCES SHOWN HEREON ARE ON THE ILLINOIS STATE PLANE COORDINATE SYSTEM, EAST ZONE, NAD83 (2011 ADJUSTMENT) "GRID".

ALL MEASURED AND CALCULATED DISTANCES ARE "GRID" NOT "GROUND". TO OBTAIN GROUND DISTANCES, DIVIDE GRID DISTANCES BY COMBINATION FACTOR OF 0.9999750000.

AREAS SHOWN ON THIS PLAT ARE "GROUND".

STATE OF ILLINOIS)
) SS
COUNTY OF COOK)

I, BRADLEY K. LUEDERS, AN ILLINOIS PROFESSIONAL LAND SURVEYOR, STATE THAT I HAVE SURVEYED THE PLAT OF HIGHWAY SHOWN HEREON AND THAT THIS PROFESSIONAL SERVICE CONFORMS TO THE CURRENT ILLINOIS MINIMUM STANDARDS FOR A BOUNDARY SURVEY FOR THE PROPOSED PARCEL(S) TO BE ACQUIRED BY THE STATE OF ILLINOIS, DEPARTMENT OF TRANSPORTATION, SHOWN HEREON.

DATED NOVEMBER 25, 2024

BRADLEY K. LUEDERS, PLS NO. 035-003406
LICENSE EXPIRATION DATE: 11/30/2024

BRADLEY K. LUEDERS 035-003406 PROFESSIONAL LAND SURVEYOR STATE OF ILLINOIS SOUTH HOLLAND, ILLINOIS

MODEL: EsDLP - Plan 7 [Sheet]
FILE NAME: H:\PROJECTS\2021\21-R0902.01_IDOT_TINLEY_PARK_INTERSTATE_80_OAK_PARK_AVENUE_WORK_ORDER_03\MICROSTATION\21R0902_08-ALGN.dgn

Robinson ENGINEERING 17000 SOUTH PARK AVENUE SOUTH HOLLAND, IL 60473 (708) 331-6700	USER NAME = kmuhr	DESIGNED -	REVISED -	ILLINOIS DEPARTMENT OF TRANSPORTATION PLAT OF HIGHWAYS
		DRAWN - KWM	REVISED -	
	PLOT SCALE = $SCALE$	CHECKED - BKL	REVISED -	
	PLOT DATE = 11/24/2024	DATE - 09/09/24	REVISED -	

ROUTE	SECTION 6	COUNTY COOK	JOB# R-90-008-21
SEC	T 35 , R 13E OF 3RD P.M.	PROJECT#	OAK PARK AVENUE AT INTERSTATE 80
SCALE: 1"=50'	SHEET NO. 7 OF 9 SHEETS	STA 95+00.00	TO STA 100+79.01 CONTRACT NO.

MODEL: Plat 7 [Sheet]
FILE NAME: c:\pwworking\primeralpwprod\kludzia\dms617511D1622W20-Plat of Highway 7.dgn

Ardmore Roderick	USER NAME = kingaludzia	DESIGNED - KL	REVISED -	STATE OF ILLINOIS DEPARTMENT OF TRANSPORTATION
		DRAWN - KL	REVISED -	
		CHECKED - STB	REVISED -	
	PLOT DATE = 5/6/2026	DATE - 5/6/2026	REVISED -	

OAK PARK AVENUE OVER I-80
PLAT OF HIGHWAYS
SHEET 7 OF 9 SHEETS

F.A.I RTE.	SECTION	COUNTY	TOTAL SHEETS	SHEET NO.
80	FAI 80 23 Bridge Replacement 2	COOK	158	60
		CONTRACT NO. 62W20		
		ILLINOIS	FED. AID PROJECT	

PART OF SECTION 6, TWP. 35 N., R. 13 E. OF THE 3RD. P.M., IN COOK COUNTY, ILLINOIS.

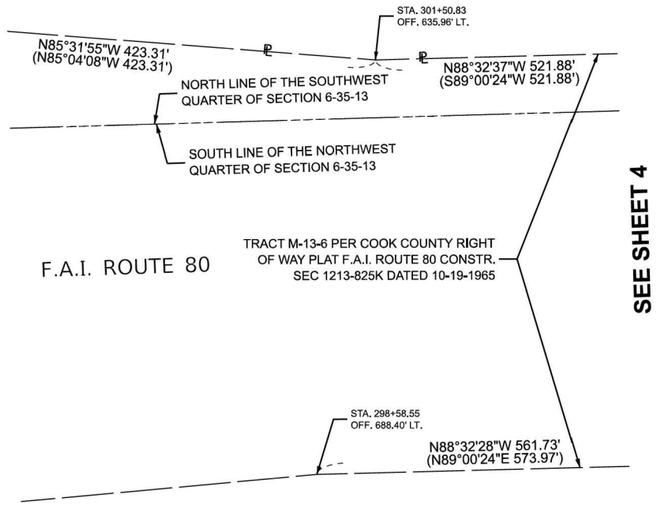

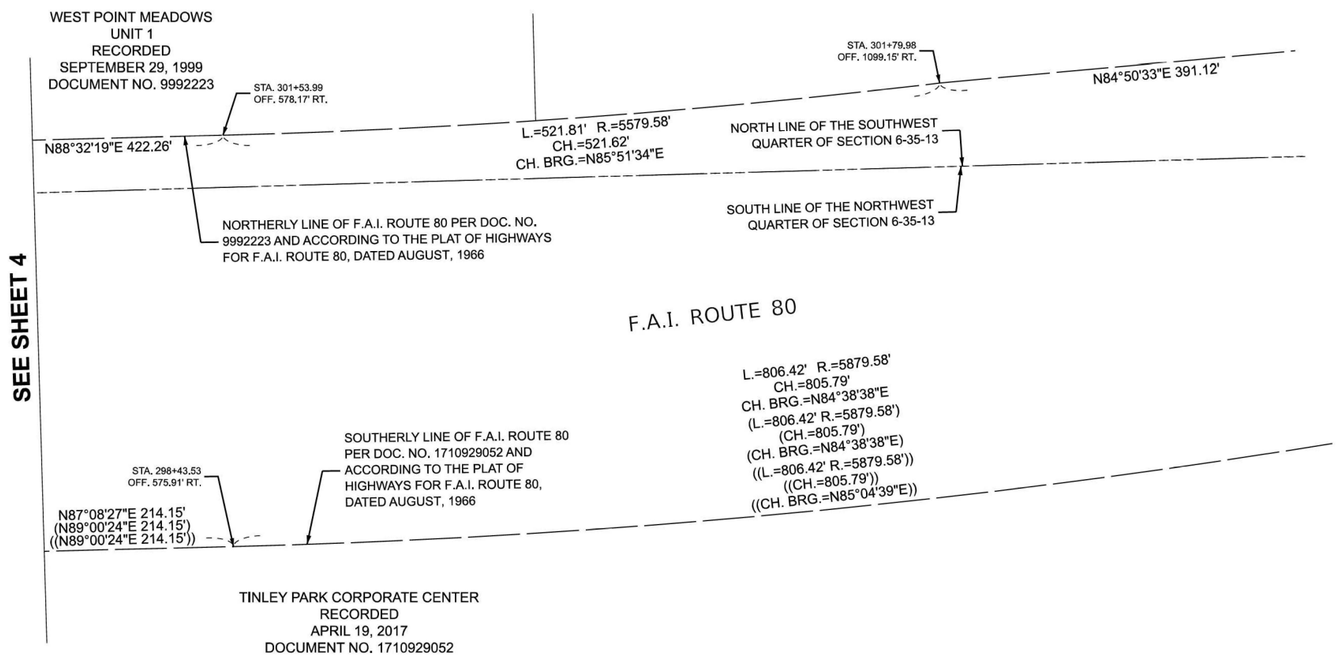

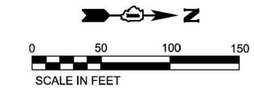

NOTES

ALL DIMENSIONS ARE MEASURED UNLESS OTHERWISE SPECIFIED.

BEARINGS AND DISTANCES SHOWN HEREON ARE ON THE ILLINOIS STATE PLANE COORDINATE SYSTEM, EAST ZONE, NAD83 (2011 ADJUSTMENT) "GRID".

ALL MEASURED AND CALCULATED DISTANCES ARE "GRID" NOT "GROUND". TO OBTAIN GROUND DISTANCES, DIVIDE GRID DISTANCES BY COMBINATION FACTOR OF 0.9999750000.

AREAS SHOWN ON THIS PLAT ARE "GROUND".

RIGHT-OF-WAY LEGEND

T.4N. R.14W. 3RD. P.M. 2 1 11 12 — T.4N. R.13W. 3RD. P.M. 1 12 — SECTION CORNERS

T.4N. R.14W. 3RD. P.M. 11 12 — T.4N. R.13W. 3RD. P.M. 12 — QUARTER SECTION CORNERS

- EXISTING CENTERLINE
- EXISTING RIGHT-OF-WAY LINE
- FORMER RIGHT-OF-WAY LINE
- EXISTING IDOT EASEMENT LINE
- EXISTING EASEMENT LINE
- BUILDING SETBACK LINE
- AC — EXISTING ACCESS CONTROL LINE
- AC — EXISTING RIGHT-OF-WAY & PROPOSED ACCESS CONTROL LINE
- PROPOSED CENTERLINE
- PROPOSED RIGHT-OF-WAY LINE
- PROPOSED TEMPORARY EASEMENT LINE
- PROPOSED PERMANENT EASEMENT LINE
- SECTION LINE
- QUARTER SECTION LINE
- QUARTER QUARTER SECTION LINE
- ℄ PROPERTY LINE (TITLE)
- RECORDED PLAT/DEED LINE
- APL — APPARENT PROPERTY LINE
- SAME OWNERSHIP
- 121.45' MEASURED DIMENSION
- (121.45') RECORDED DIMENSION
- FOUND STONE
- FOUND IRON PIPE OR IRON ROD AT CORNER UNLESS OTHERWISE NOTED
- SET 5/8 INCH IRON ROD WITH PLASTIC CAP IDENTIFIED BY SURVEYORS LICENSE NUMBER AT CORNER UNLESS OTHERWISE NOTED
- PERMANENT SURVEY MONUMENT, I.D.O.T. STD. 667101 (TO BE SET BY OTHERS)
- △ SET 5/8 INCH IRON ROD AS SURVEY CONTROL UNLESS OTHERWISE NOTED
- \+ FOUND CUT CROSS
- \+ SET CUT CROSS

■ STAKING OF PROPOSED RIGHT-OF-WAY AND PERMANENT EASEMENT CORNERS. SET 5/8 INCH METAL ROD WITH DEPARTMENT OF TRANSPORTATION SURVEY ALUMINUM CAP TO MONUMENT THE POSITION SHOWN. IDENTIFIED BY INSCRIPTION DATA AND SURVEYORS LICENSE NUMBER.

■ B STAKING OF PROPOSED RIGHT-OF-WAY AND PERMANENT EASEMENT CORNERS IN CULTIVATED AREA, A MINIMUM OF 20 INCHES BELOW THE GROUND SURFACE. SET 5/8 INCH METAL ROD WITH DIVISION OF HIGHWAY SURVEY ALUMINUM CAP TO MONUMENT THE POSITION SHOWN. IDENTIFIED BY INSCRIPTION DATA AND SURVEYORS LICENSE NUMBER.

STATE OF ILLINOIS)
) SS
COUNTY OF COOK)

I, BRADLEY K. LUEDERS, AN ILLINOIS PROFESSIONAL LAND SURVEYOR, STATE THAT I HAVE SURVEYED THE PLAT OF HIGHWAY SHOWN HEREON AND THAT THIS PROFESSIONAL SERVICE CONFORMS TO THE CURRENT ILLINOIS MINIMUM STANDARDS FOR A BOUNDARY SURVEY FOR THE PROPOSED PARCEL(S) TO BE ACQUIRED BY THE STATE OF ILLINOIS, DEPARTMENT OF TRANSPORTATION, SHOWN HEREON.

DATED NOVEMBER 25, 2024

Bradley K Lueders

BRADLEY K. LUEDERS, PLS NO. 035-003406
LICENSE EXPIRATION DATE: 11/30/2024

BRADLEY K. LUEDERS 035-003406 PROFESSIONAL LAND SURVEYOR STATE OF ILLINOIS SOUTH HOLLAND, ILLINOIS

MODEL: Unnamed Plan 1 [Sheet]
FILE NAME: N:\PROJ\IDOT\2021\21-040962.0B_IDOT_TINLEY_PARK_INTERSTATE_80_OAK_PARK_AVENUE_WORK_ORDER_0\MICROSTATION\21R0852_0A-ALGN.dgn

Robinson ENGINEERING 17000 SOUTH PARK AVENUE SOUTH HOLLAND, IL 60473 (708) 331-8700	USER NAME = kmuhr	DESIGNED -	REVISED -
		DRAWN - KWM	REVISED -
	PLOT SCALE = $SCALE$	CHECKED - BKL	REVISED -
	PLOT DATE = 11/24/2024	DATE - 09/09/24	REVISED -

ILLINOIS DEPARTMENT OF TRANSPORTATION
PLAT OF HIGHWAYS

ROUTE	SECTION 6	COUNTY COOK JOB# R-90-008-21
SEC	T 35 , R 13E OF 3RD P.M.	PROJECT# OAK PARK AVENUE AT INTERSTATE 80
SCALE: 1"=50'	SHEET NO. 8 OF 9 SHEETS	STA TO STA CONTRACT NO.

MODEL: Plat 8 [Sheet]
FILE NAME: c:\pwworking\primeratpwprod\kludzia\dms617751\D162W20-Plat of Highway 8.dgn

Ardmore Roderick	USER NAME = kingaludzia	DESIGNED - KL	REVISED -
		DRAWN - KL	REVISED -
		CHECKED - STB	REVISED -
	PLOT DATE = 5/6/2026	DATE - 5/6/2026	REVISED -

STATE OF ILLINOIS
DEPARTMENT OF TRANSPORTATION

OAK PARK AVENUE OVER I-80
PLAT OF HIGHWAYS
SHEET 8 OF 9 SHEETS

F.A.I RTE.	SECTION	COUNTY	TOTAL SHEETS	SHEET NO.
80	FAI 80 23 Bridge Replacement 2	COOK	158	61
		CONTRACT NO. 62W20		
		ILLINOIS	FED. AID PROJECT	

PART OF SECTION 6, TWP. 35 N., R. 13 E. OF THE 3RD. P.M., IN COOK COUNTY, ILLINOIS.

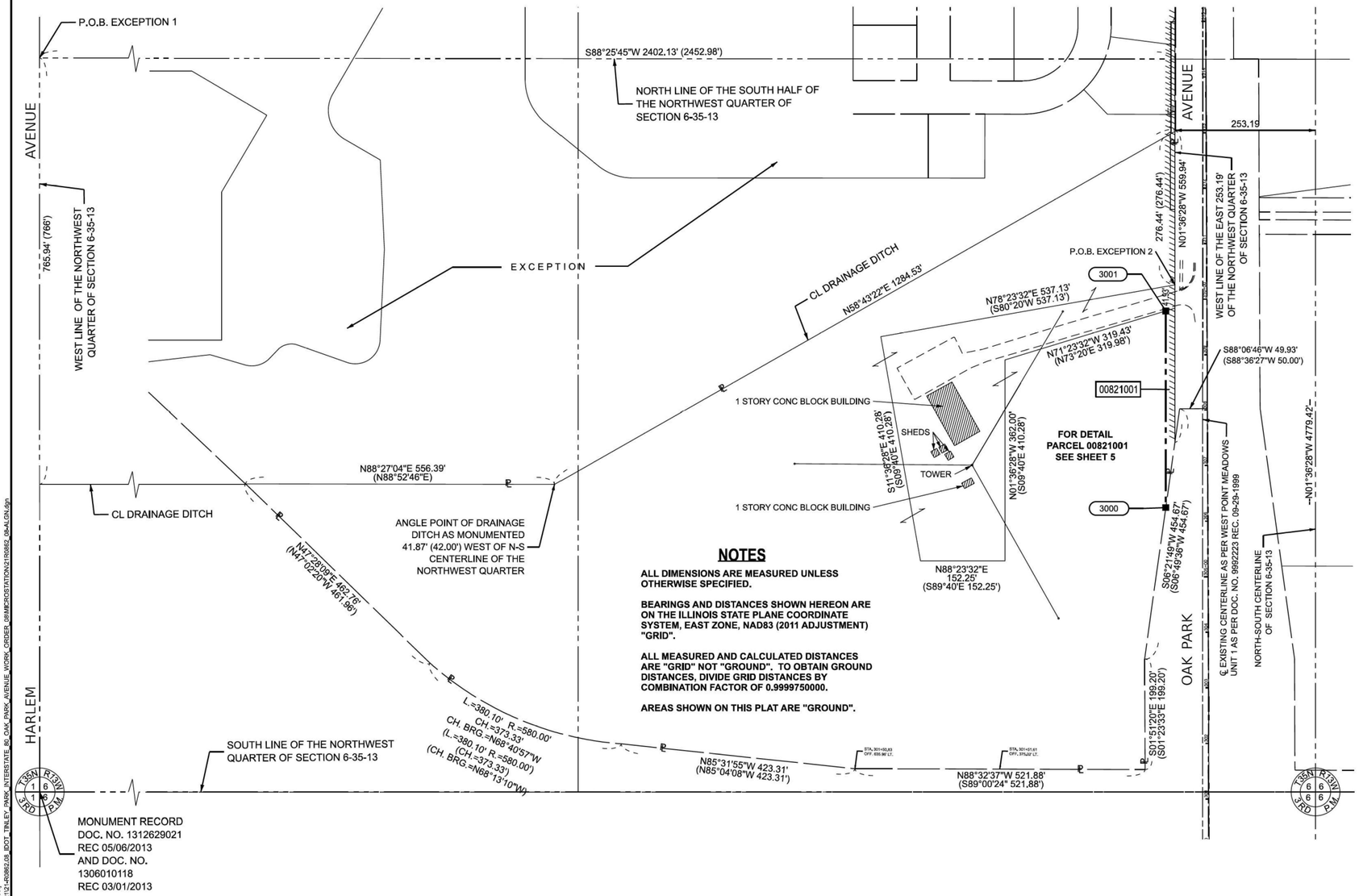

0 50 100 150
SCALE IN FEET

RIGHT-OF-WAY LEGEND

- SECTION CORNERS
- QUARTER SECTION CORNERS
- EXISTING CENTERLINE
- EXISTING RIGHT-OF-WAY LINE
- FORMER RIGHT-OF-WAY LINE
- EXISTING IDOT EASEMENT LINE
- EXISTING EASEMENT LINE
- BUILDING SETBACK LINE
- AC — EXISTING ACCESS CONTROL LINE
- AC — EXISTING RIGHT-OF-WAY & PROPOSED ACCESS CONTROL LINE
- PROPOSED CENTERLINE
- PROPOSED RIGHT-OF-WAY LINE
- PROPOSED TEMPORARY EASEMENT LINE
- PROPOSED PERMANENT EASEMENT LINE
- SECTION LINE
- QUARTER SECTION LINE
- QUARTER QUARTER SECTION LINE
- ℄ PROPERTY LINE (TITLE)
- RECORDED PLAT/DEED LINE
- APL — APPARENT PROPERTY LINE
- SAME OWNERSHIP
- 121.45' MEASURED DIMENSION
- (121.45') RECORDED DIMENSION
- FOUND STONE
- FOUND IRON PIPE OR IRON ROD AT CORNER UNLESS OTHERWISE NOTED
- SET 5/8 INCH IRON ROD WITH PLASTIC CAP IDENTIFIED BY SURVEYORS LICENSE NUMBER AT CORNER UNLESS OTHERWISE NOTED
- PERMANENT SURVEY MONUMENT, I.D.O.T. STD. 667101 (TO BE SET BY OTHERS)
- SET 5/8 INCH IRON ROD AS SURVEY CONTROL UNLESS OTHERWISE NOTED
- + FOUND CUT CROSS
- + SET CUT CROSS

■ STAKING OF PROPOSED RIGHT-OF-WAY AND PERMANENT EASEMENT CORNERS. SET 5/8 INCH METAL ROD WITH DEPARTMENT OF TRANSPORTATION SURVEY ALUMINUM CAP TO MONUMENT THE POSITION SHOWN. IDENTIFIED BY INSCRIPTION DATA AND SURVEYORS LICENSE NUMBER.

■ B STAGING OF PROPOSED RIGHT-OF-WAY AND PERMANENT EASEMENT CORNERS IN CULTIVATED AREA, A MINIMUM OF 20 INCHES BELOW THE GROUND SURFACE. SET 5/8 INCH METAL ROD WITH DIVISION OF HIGHWAY SURVEY ALUMINUM CAP TO MONUMENT THE POSITION SHOWN. IDENTIFIED BY INSCRIPTION DATA AND SURVEYORS LICENSE NUMBER.

NOTES

ALL DIMENSIONS ARE MEASURED UNLESS OTHERWISE SPECIFIED.

BEARINGS AND DISTANCES SHOWN HEREON ARE ON THE ILLINOIS STATE PLANE COORDINATE SYSTEM, EAST ZONE, NAD83 (2011 ADJUSTMENT) "GRID".

ALL MEASURED AND CALCULATED DISTANCES ARE "GRID" NOT "GROUND". TO OBTAIN GROUND DISTANCES, DIVIDE GRID DISTANCES BY COMBINATION FACTOR OF 0.9999750000.

AREAS SHOWN ON THIS PLAT ARE "GROUND".

STATE OF ILLINOIS)
) SS
COUNTY OF COOK)

I, BRADLEY K. LUEDERS, AN ILLINOIS PROFESSIONAL LAND SURVEYOR, STATE THAT I HAVE SURVEYED THE PLAT OF HIGHWAY SHOWN HEREON AND THAT THIS PROFESSIONAL SERVICE CONFORMS TO THE CURRENT ILLINOIS MINIMUM STANDARDS FOR A BOUNDARY SURVEY FOR THE PROPOSED PARCEL(S) TO BE ACQUIRED BY THE STATE OF ILLINOIS, DEPARTMENT OF TRANSPORTATION, SHOWN HEREON.

DATED NOVEMBER 25, 2024

Bradley K Lueders

BRADLEY K. LUEDERS, PLS NO. 035-003406
LICENSE EXPIRATION DATE: 11/30/2024

BRADLEY K. LUEDERS 035-003406 PROFESSIONAL LAND SURVEYOR STATE OF ILLINOIS SOUTH HOLLAND, ILLINOIS

MODEL: Default
FILE NAME: N:\PROJECTS\2022\12-40982.06_IDOT_TINLEY_PARK_INTERSTATE_80_OAK_PARK_AVENUE_WORK_ORDER_08\MICROSTATION\21R0862_06-ALGN.dgn

Robinson ENGINEERING 17000 SOUTH PARK AVENUE SOUTH HOLLAND, IL 60473 (708) 331-6700	USER NAME = kmuhr	DESIGNED -	REVISED -
		DRAWN - KWM	REVISED -
	PLOT SCALE = $SCALE$	CHECKED - BKL	REVISED -
	PLOT DATE = 11/24/2024	DATE - 09/09/24	REVISED -

ILLINOIS DEPARTMENT OF TRANSPORTATION
PLAT OF HIGHWAYS

ROUTE	SECTION 6	COUNTY COOK	JOB# R-90-008-21
SEC	T 35 , R 13E OF 3RD P.M.	PROJECT#	OAK PARK AVENUE AT INTERSTATE 80
SCALE: 1"=50'	SHEET NO. 9 OF 9 SHEETS	STA 95+00.00	TO STA 100+79.01 CONTRACT NO.

MODEL: Plat 9 [Sheet]
FILE NAME: c:\pwworking\jdrimeral\pwprod\kludzia\dms617251\D1\62W20-Plat of Highway 9.dgn

Ardmore Roderick

USER NAME = kingaludzia	DESIGNED - KL	REVISED -	
	DRAWN - KL	REVISED -	
	CHECKED - STB	REVISED -	
PLOT DATE = 5/6/2026	DATE - 5/6/2026	REVISED -	

STATE OF ILLINOIS
DEPARTMENT OF TRANSPORTATION

OAK PARK AVENUE OVER I-80
PLAT OF HIGHWAYS

SHEET 9 OF 9 SHEETS

F.A.I RTE.	SECTION	COUNTY	TOTAL SHEETS	SHEET NO.
80	FAI 80 23 Bridge Replacement 2	COOK	158	62
		CONTRACT NO. 62W20		
	ILLINOIS FED. AID PROJECT			

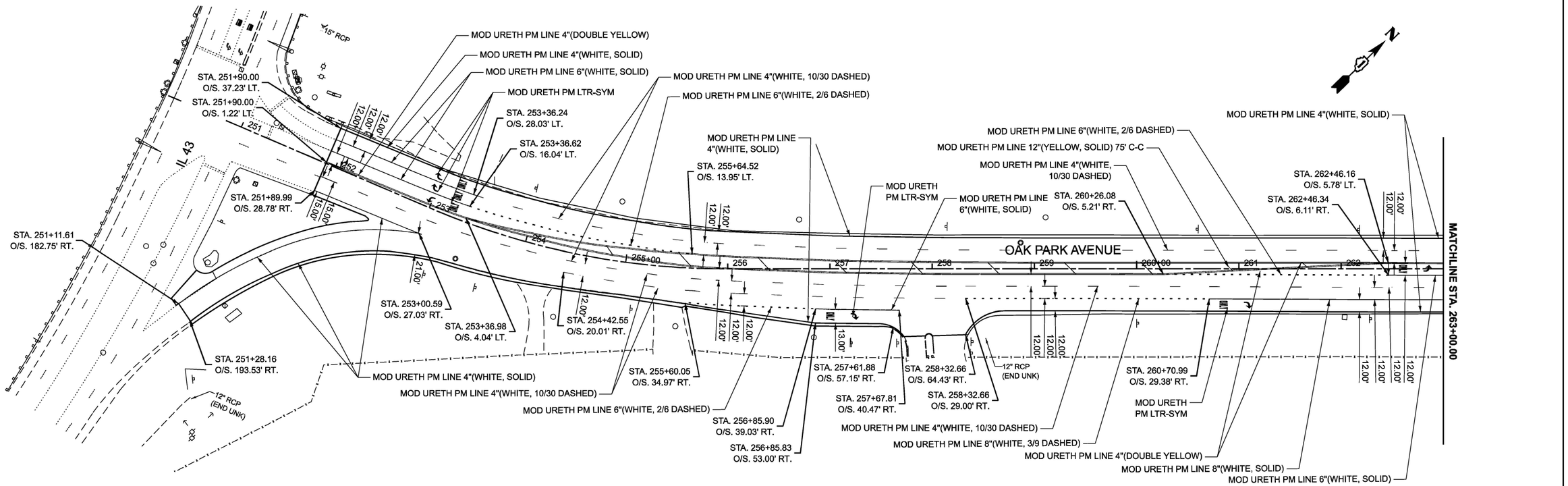

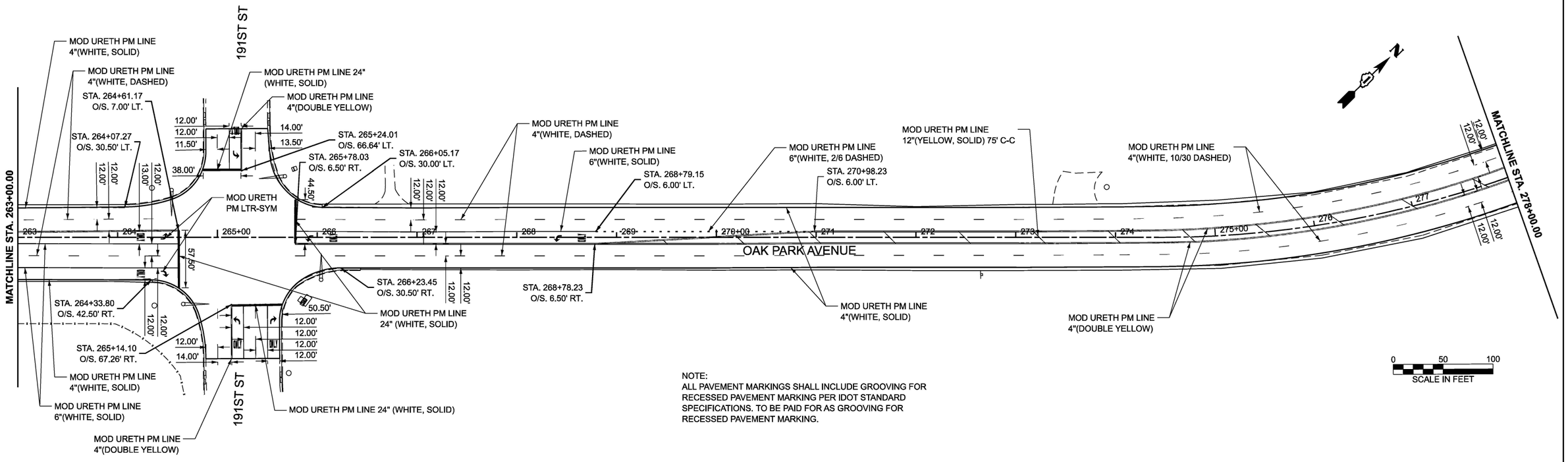

NOTE:
ALL PAVEMENT MARKINGS SHALL INCLUDE GROOVING FOR RECESSED PAVEMENT MARKING PER IDOT STANDARD SPECIFICATIONS. TO BE PAID FOR AS GROOVING FOR RECESSED PAVEMENT MARKING.

MODEL: PR Oak Park Ave CL PMK - Plan 1 [Sheet]
FILE NAME: c:\pwworking\primera\pwprod\mmathews\dms58232\D162W20-sht-pmk.dgn

Primera
650 W. JACKSON BLVD. SUITE 608 . CHICAGO IL 60661 P:312-566-0910 F:312-566-0915

USER NAME = Inguyen	DESIGNED - MM	REVISED -	
	DRAWN - MM	REVISED -	
	CHECKED - JR	REVISED -	
PLOT DATE = 1/16/2026	DATE - 05/06/2026	REVISED -	

STATE OF ILLINOIS
DEPARTMENT OF TRANSPORTATION

OAK PARK AVENUE OVER I-80
PAVEMENT MARKING & SIGNING

SCALE: 1"=50' | SHEET 1 OF 3 SHEETS | STA. 248+00.00 | TO STA. 278+00.00

F.A.I RTE.	SECTION	COUNTY	TOTAL SHEETS	SHEET NO.
80	FAI 80 23 Bridge Replacement 2	COOK	158	63
		CONTRACT NO. 62W20		
		ILLINOIS	FED. AID PROJECT	

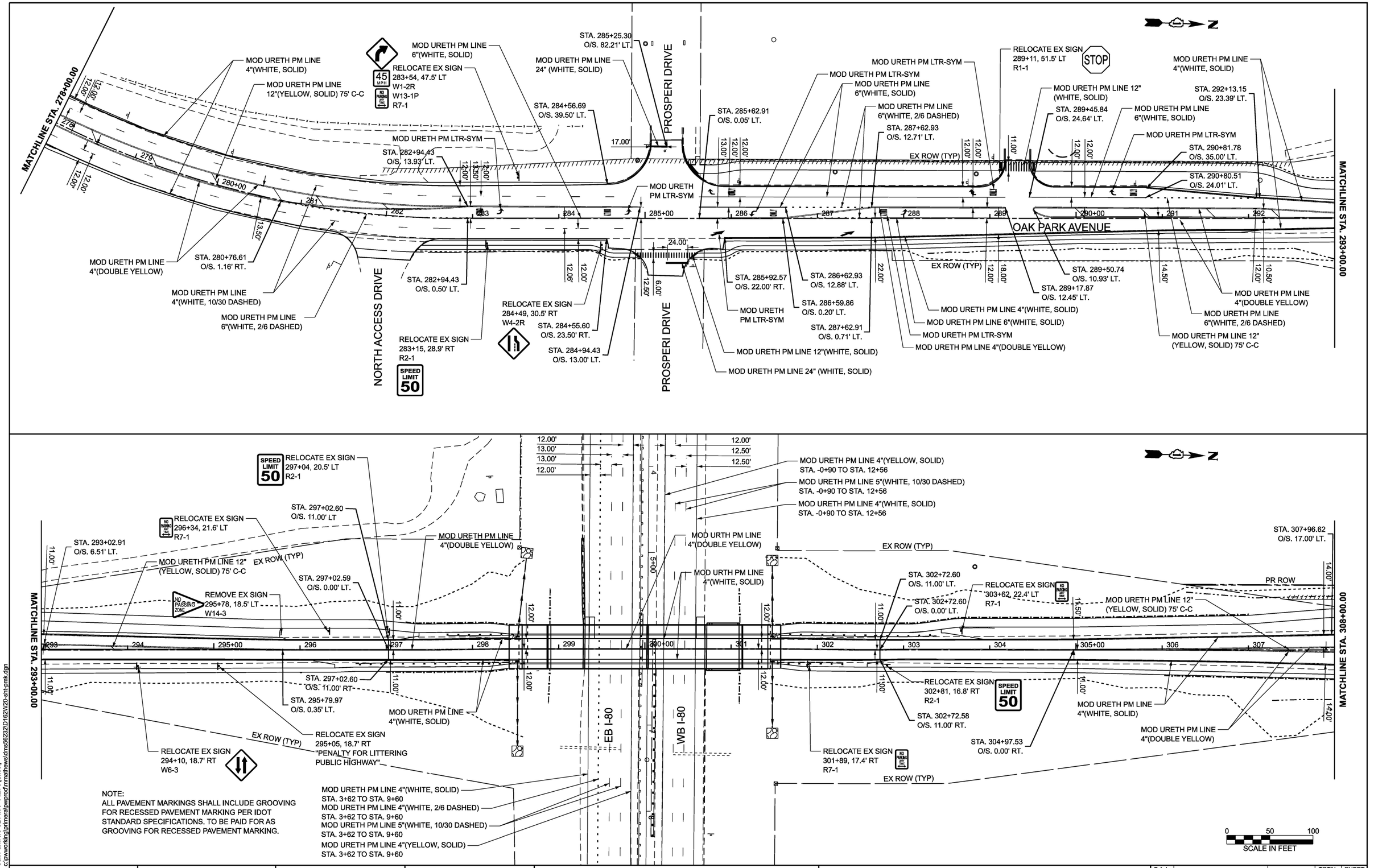

NOTE:
ALL PAVEMENT MARKINGS SHALL INCLUDE GROOVING FOR RECESSED PAVEMENT MARKING PER IDOT STANDARD SPECIFICATIONS. TO BE PAID FOR AS GROOVING FOR RECESSED PAVEMENT MARKING.

MODEL: PR Oak Park Ave CL PMK - Plan 3 [Sheet]
FILE NAME: c:\pwworking\primera\pwprod\mmathews\dms56222\D162W20-sht-pmk.dgn

Primera
650 W. JACKSON BLVD. SUITE 630 . CHICAGO IL 60661 P:312-086-0910 F:312-086-0415

USER NAME = mmathews	DESIGNED - MM	REVISED -	
	DRAWN - MM	REVISED -	
	CHECKED - JR	REVISED -	
PLOT DATE = 1/16/2026	DATE - 05/06/2026	REVISED -	

STATE OF ILLINOIS
DEPARTMENT OF TRANSPORTATION

OAK PARK AVENUE OVER I-80
PAVEMENT MARKING & SIGNING

SCALE: 1"=50' | SHEET 2 OF 3 SHEETS | STA. 278+00.00 | TO STA. 308+00.00

F.A.I RTE.	SECTION	COUNTY	TOTAL SHEETS	SHEET NO.
80	FAI 80 23 Bridge Replacement 2	COOK	158	64
		CONTRACT NO. 62W20		
	ILLINOIS	FED. AID PROJECT		

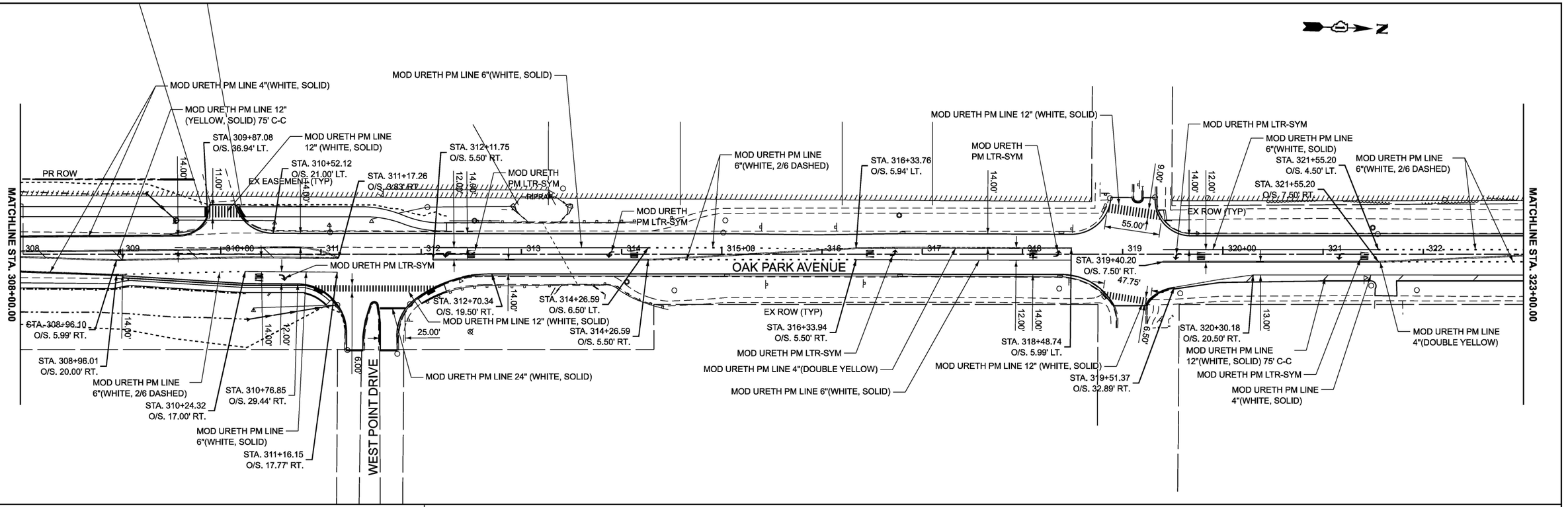

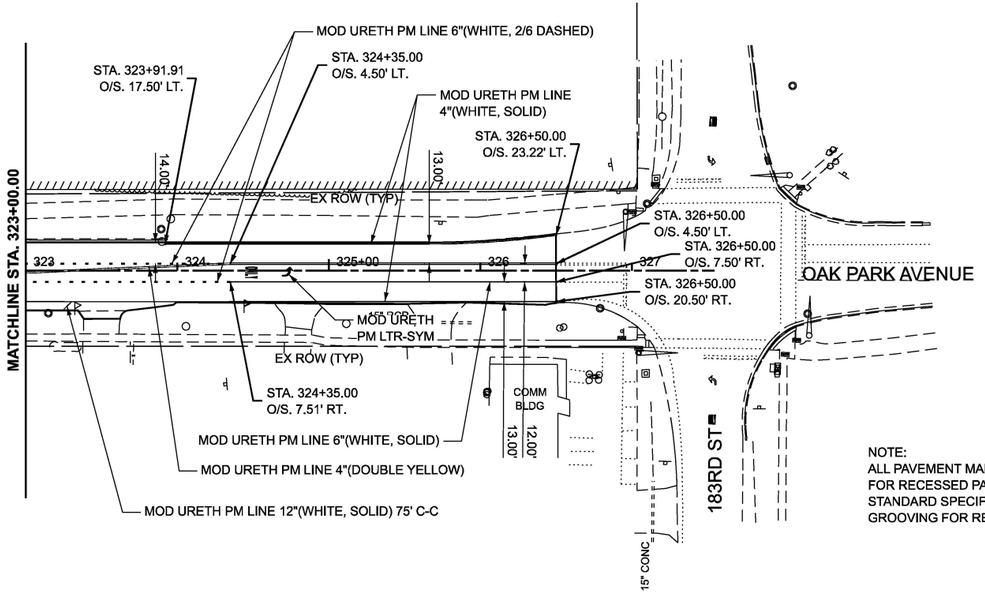

NOTE:
ALL PAVEMENT MARKINGS SHALL INCLUDE GROOVING FOR RECESSED PAVEMENT MARKING PER IDOT STANDARD SPECIFICATIONS. TO BE PAID FOR AS GROOVING FOR RECESSED PAVEMENT MARKING.

0 50 100
SCALE IN FEET

MODEL: PR Oak Park Ave CL PMK - Plan 5 [Sheet]
FILE NAME: c:\pwworking\primera\pwprod\mmathews\dms56232\D1622W20-sht-pmk.dgn

Primera
650 W. JACKSON BLVD. SUITE 630 . CHICAGO IL 60661 P:312-986-0810 F:312-986-0815

USER NAME = mmathews	DESIGNED - MM	REVISED -	
	DRAWN - MM	REVISED -	
	CHECKED - JR	REVISED -	
PLOT DATE = 5/4/2026	DATE - 05/06/2026	REVISED -	

STATE OF ILLINOIS
DEPARTMENT OF TRANSPORTATION

OAK PARK AVENUE OVER I-80
PAVEMENT MARKING & SIGNING

SCALE: 1"=50' | SHEET 3 OF 3 SHEETS | STA. 308+00.00 | TO STA. 338+00.00

F.A.I RTE.	SECTION	COUNTY	TOTAL SHEETS	SHEET NO.
80	FAI 80 23 Bridge Replacement 2	COOK	158	65
		CONTRACT NO. 62W20		
	ILLINOIS FED. AID PROJECT			

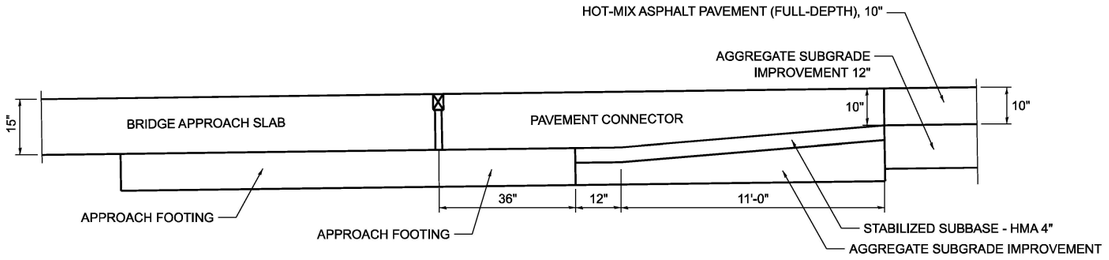

BRIDGE APPROACH PAVEMENT CONNECTOR (SPECIAL)

DETAIL FOR ROADWAY (HMA)

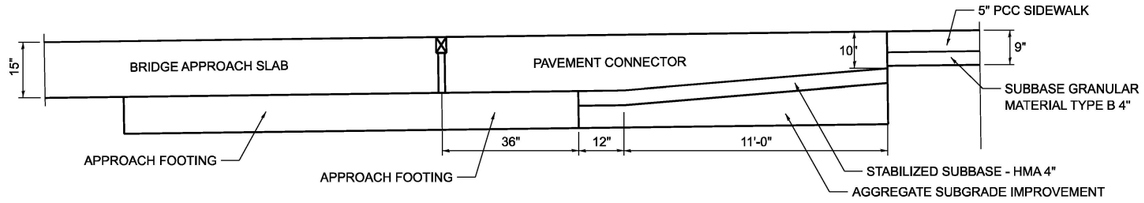

BRIDGE APPROACH PAVEMENT CONNECTOR (SPECIAL)

DETAIL FOR SIDEWALK (PCC)

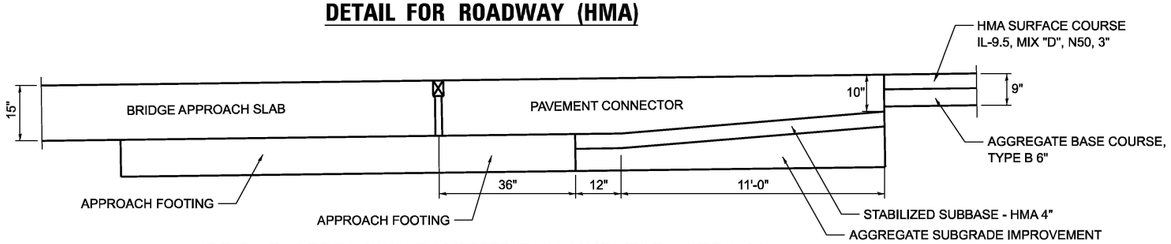

BRIDGE APPROACH PAVEMENT CONNECTOR (SPECIAL)

DETAIL FOR BIKE PATH (HMA)

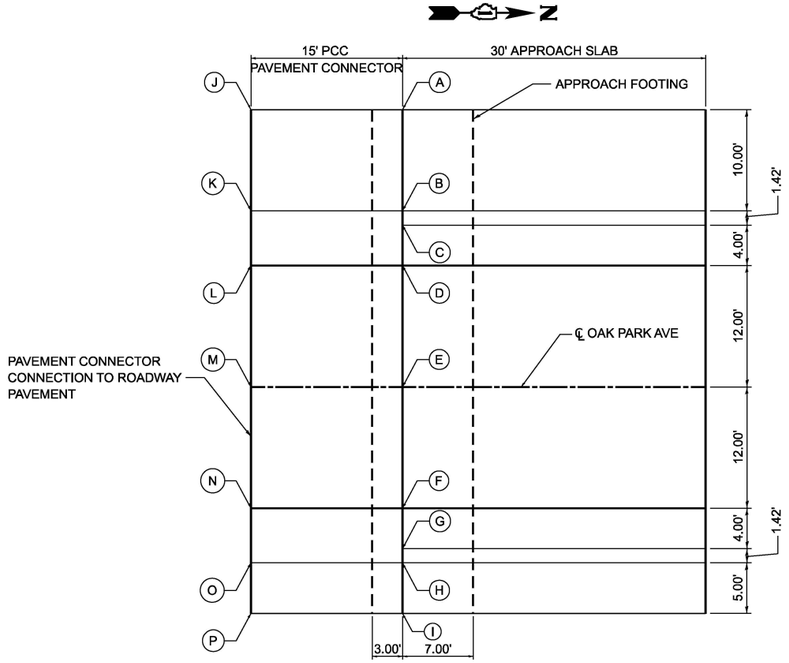

SOUTH BRIDGE APPROACH PAVEMENT CONNECTOR (SPECIAL) DETAIL

SOUTH PAVEMENT CONNECTOR

POINT	DESCRIPTION	STATION	OFFSET	LT/RT	ELEVATION
A	SHARED USE PATH LT	298+57.62	27.42	LT	718.30
B	SHARED USE PATH RT	298+57.62	17.42	LT	718.47
C	EDGE OF SHOLDER LT	298+57.62	16	LT	718.50
D	EDGE OF PAVEMENT LT	298+57.62	12	LT	718.58
E	CENTERLINE	298+57.62	0	-	718.76
F	EDGE OF PAVEMENT RT	298+57.62	12	RT	718.58
G	EDGE OF SHOULDER RT	298+57.62	16	RT	718.50
H	SIDEWALK LT	298+57.62	17.42	RT	718.47
I	SIDEWALK RT	298+57.62	22.42	RT	718.39
J	SHARED USE PATH LT	298+42.90	27.49	LT	717.92
K	SHARED USE PATH RT	298+42.79	17.49	LT	718.09
L	EDGE OF PAVEMENT LT	298+42.75	12.07	LT	718.20
M	CENTERLINE	298+42.62	0.00	-	718.38
N	EDGE OF PAVEMENT RT	298+42.48	11.91	RT	718.20
O	SIDEWALK LT	298+42.44	17.34	RT	718.09
P	SIDEWALK RT	298+42.39	22.34	RT	718.01

NORTH PAVEMENT CONNECTOR

POINT	DESCRIPTION	STATION	OFFSET	LT/RT	ELEVATION
A	SHARED USE PATH LT	301+42.53	27.42	LT	718.30
B	SHARED USE PATH RT	301+42.53	17.42	LT	718.47
C	EDGE OF SHOLDER LT	301+42.53	16	LT	718.50
D	EDGE OF PAVEMENT LT	301+42.53	12	LT	718.58
E	CENTERLINE	301+42.53	0	-	718.76
F	EDGE OF PAVEMENT RT	301+42.53	12	RT	718.58
G	EDGE OF SHOULDER RT	301+42.53	16	RT	718.50
H	SIDEWALK LT	301+42.53	17.42	RT	718.47
I	SIDEWALK RT	301+42.53	22.42	RT	718.39
J	SHARED USE PATH LT	301+57.25	27.50	LT	717.92
K	SHARED USE PATH RT	301+57.35	17.50	LT	718.09
L	EDGE OF PAVEMENT LT	301+57.40	12.08	LT	718.20
M	CENTERLINE	301+57.53	0.00	-	718.38
N	EDGE OF PAVEMENT RT	301+57.66	11.92	RT	718.20
O	SIDEWALK LT	301+57.71	17.34	RT	718.09
P	SIDEWALK RT	301+57.76	22.34	RT	718.01

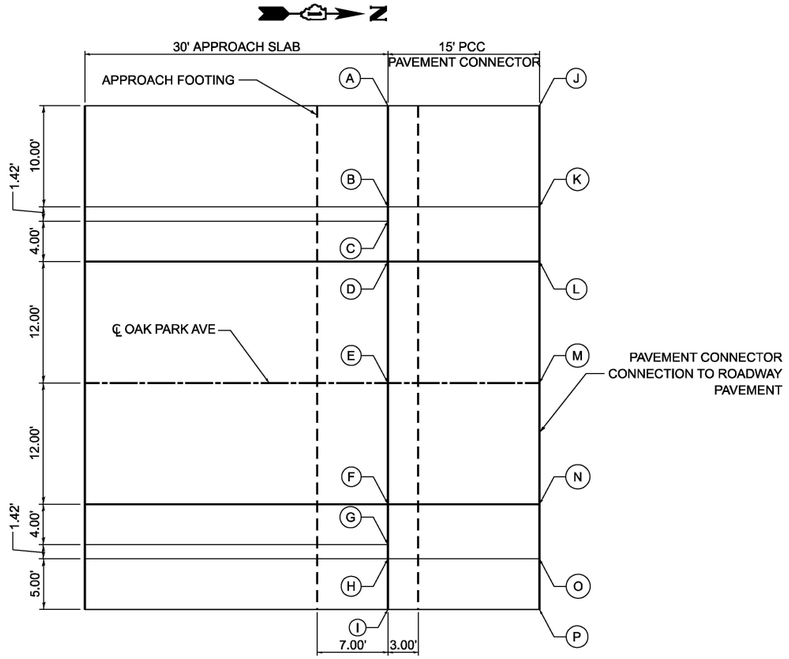

NORTH BRIDGE APPROACH PAVEMENT CONNECTOR (SPECIAL) DETAIL

MODEL: PCC-1
FILE NAME: c:\pwworking\iptimeral\pwprod\dmmathews\dms56232\D162W20-sht-PCCConnector.dgn

Primera
150 W. JACKSON BLVD. SUITE 600 CHICAGO IL 60661 P:312-686-0910 F:312-686-0415

USER NAME = Inguyen	DESIGNED - MM	REVISED -	
	DRAWN - MM	REVISED -	
	CHECKED - JR	REVISED -	
PLOT DATE = 2/25/2026	DATE - 05/06/2026	REVISED -	

STATE OF ILLINOIS
DEPARTMENT OF TRANSPORTATION

OAK PARK AVENUE OVER I-80
PCC CONNECTOR DETAIL

SCALE: | SHEET 1 OF 1 SHEETS | STA. | TO STA.

F.A.I RTE.	SECTION	COUNTY	TOTAL SHEETS	SHEET NO.
80	FAI 80 23 Bridge Replacement 2	COOK	158	66
		CONTRACT NO. 62W20		
	ILLINOIS	FED. AID PROJECT		

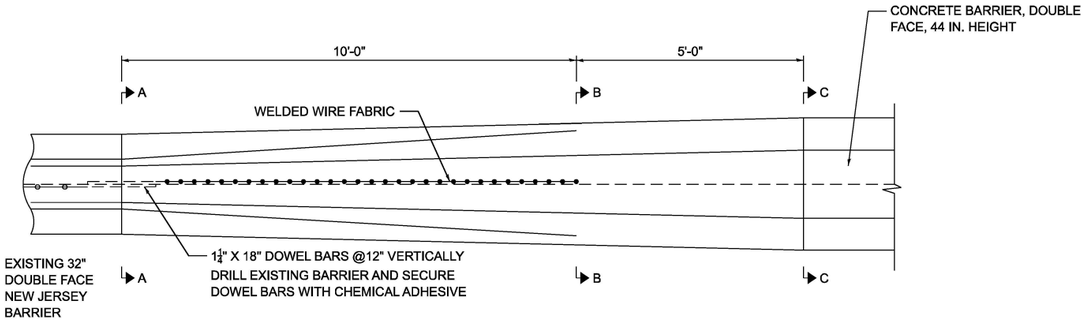

TRANSITION FROM 32" DOUBLE SIDE NEW JERSEY BARRIER TO CONCRETE BARRIER, DOUBLE FACE, 44 IN. HEIGHT

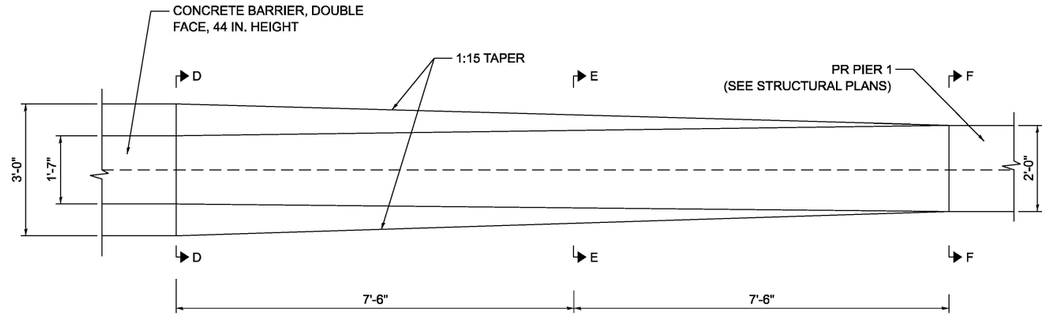

TRANSITION FROM CONCRETE BARRIER, DOUBLE FACE, 44 IN. HEIGHT TO PIER 1

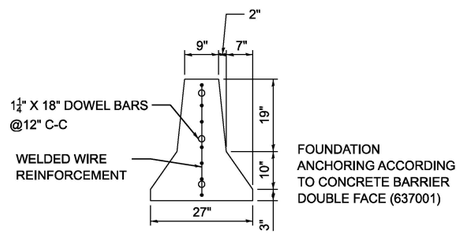

SECTION A-A
(CONSTRUCTION JOINT)

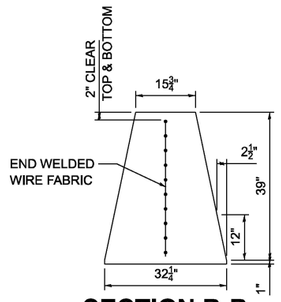

SECTION B-B

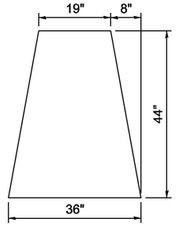

SECTION C-C & D-D
(CONSTRUCTION JOINT, AS NEEDED)

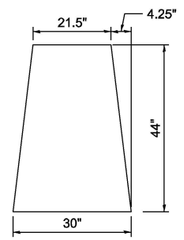

SECTION E-E

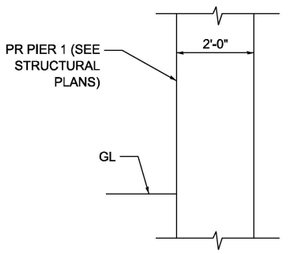

SECTION F-F
(CONSTRUCTION JOINT)

SECTION	STATION
A-A	4+84.25
B-B	4+94.25
C-C	4+99.25
D-D	5+69.25
E-E	5+76.75
F-F	5+84.25

BARRIER TRANSITION STATIONS

NOTES:
1. EXACT LOCATIONS OF BARRIER AND BARRIER TRANSITIONS TO BE DETERMINED BY THE ENGINEER IN THE FIELD
2. FOLLOW IDOT STANDARD DETAIL 637006-05 FOR CONCRETE BARRIER BASE INSTALLATION

MODEL: barrier
FILE NAME: c:\pwworking\primera\pwprod\mmathews\d\mas56232\D1621W20-sht-BarrierTransition.dgn

Primera
656 W. JACKSON BLVD. SUITE 628 . CHICAGO IL 60661 P:312-986-9910 F:312-986-9415

USER NAME = mmathews	DESIGNED - MM	REVISED -	
	DRAWN - MM	REVISED -	
	CHECKED - JR	REVISED -	
PLOT DATE = 5/4/2026	DATE - 05/06/2026	REVISED -	

STATE OF ILLINOIS
DEPARTMENT OF TRANSPORTATION

OAK PARK AVENUE OVER I-80
BARRIER TRANSITION DETAILS

SCALE: | SHEET 1 OF 1 SHEETS | STA. | TO STA.

F.A.I RTE.	SECTION	COUNTY	TOTAL SHEETS	SHEET NO.
80	FAI 80 23 Bridge Replacement 2	COOK	158	67
		CONTRACT NO. 62W20		
	ILLINOIS	FED. AID PROJECT		

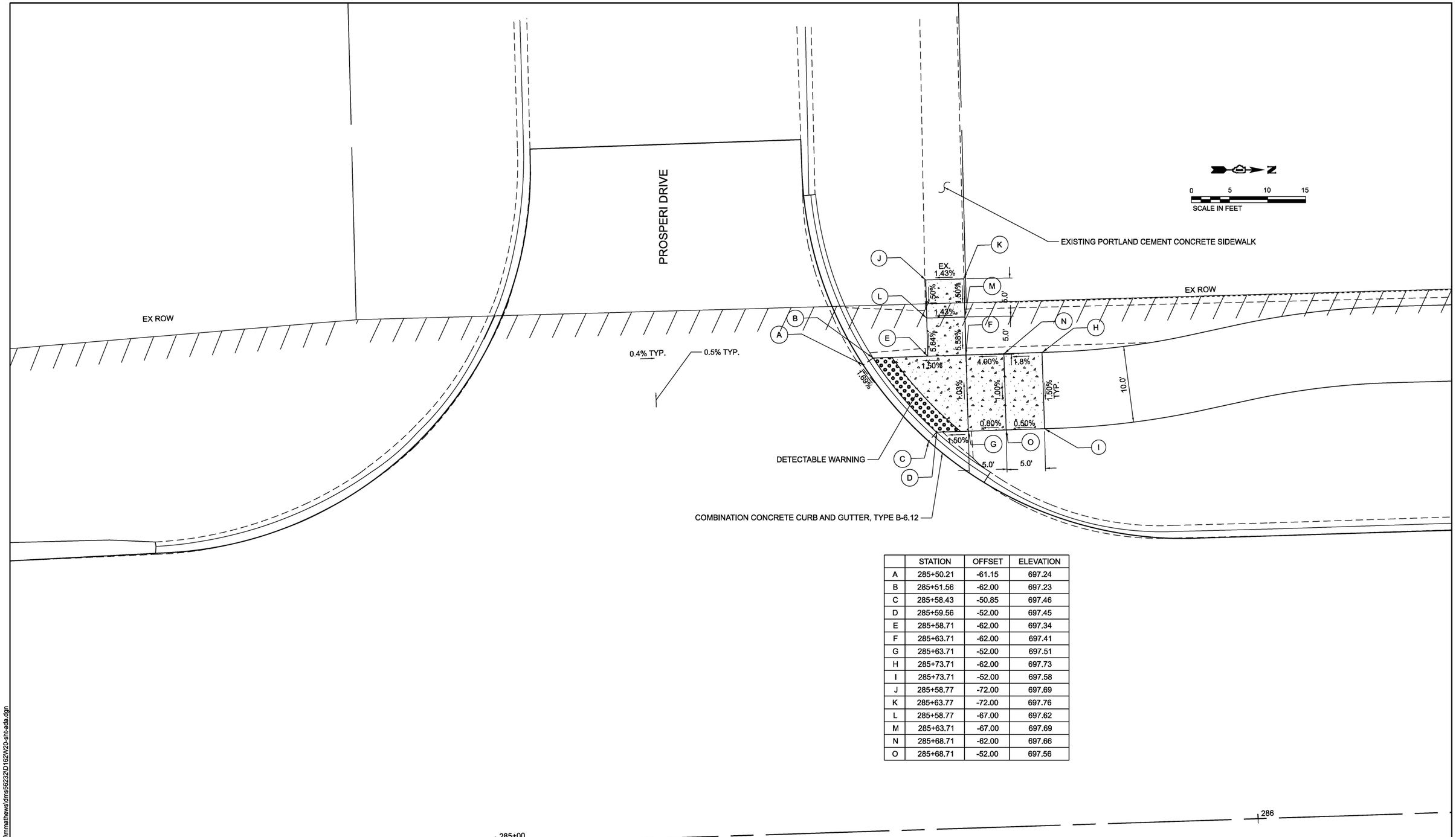

	STATION	OFFSET	ELEVATION
A	285+50.21	-61.15	697.24
B	285+51.56	-62.00	697.23
C	285+58.43	-50.85	697.46
D	285+59.56	-52.00	697.45
E	285+58.71	-62.00	697.34
F	285+63.71	-62.00	697.41
G	285+63.71	-52.00	697.51
H	285+73.71	-62.00	697.73
I	285+73.71	-52.00	697.58
J	285+58.77	-72.00	697.69
K	285+63.77	-72.00	697.76
L	285+58.77	-67.00	697.62
M	285+63.71	-67.00	697.69
N	285+68.71	-62.00	697.66
O	285+68.71	-52.00	697.56

MODEL: ADA [Sheet]
FILE NAME: c:\pwworking\primera\pwprod\mmathews\dms56232\D162W20-sht-ada.dgn

Primera
1556 W. JACKSON BLVD. SUITE 600 . CHICAGO IL 60661 P:312-686-0910 F:312-686-0415

USER NAME = Inguyen	DESIGNED - MM	REVISED -	
	DRAWN - MM	REVISED -	
	CHECKED - JR	REVISED -	
PLOT DATE = 2/25/2026	DATE - 03/06/2026	REVISED -	

STATE OF ILLINOIS
DEPARTMENT OF TRANSPORTATION

OAK PARK AVENUE OVER I-80
ADA RAMP DETAILS

SCALE: | SHEET 1 OF 5 SHEETS | STA. | TO STA.

F.A.I RTE.	SECTION	COUNTY	TOTAL SHEETS	SHEET NO.
80	FAI 80 23 Bridge Replacement 2	COOK	158	68
		CONTRACT NO. 62W20		
		ILLINOIS	FED. AID PROJECT	

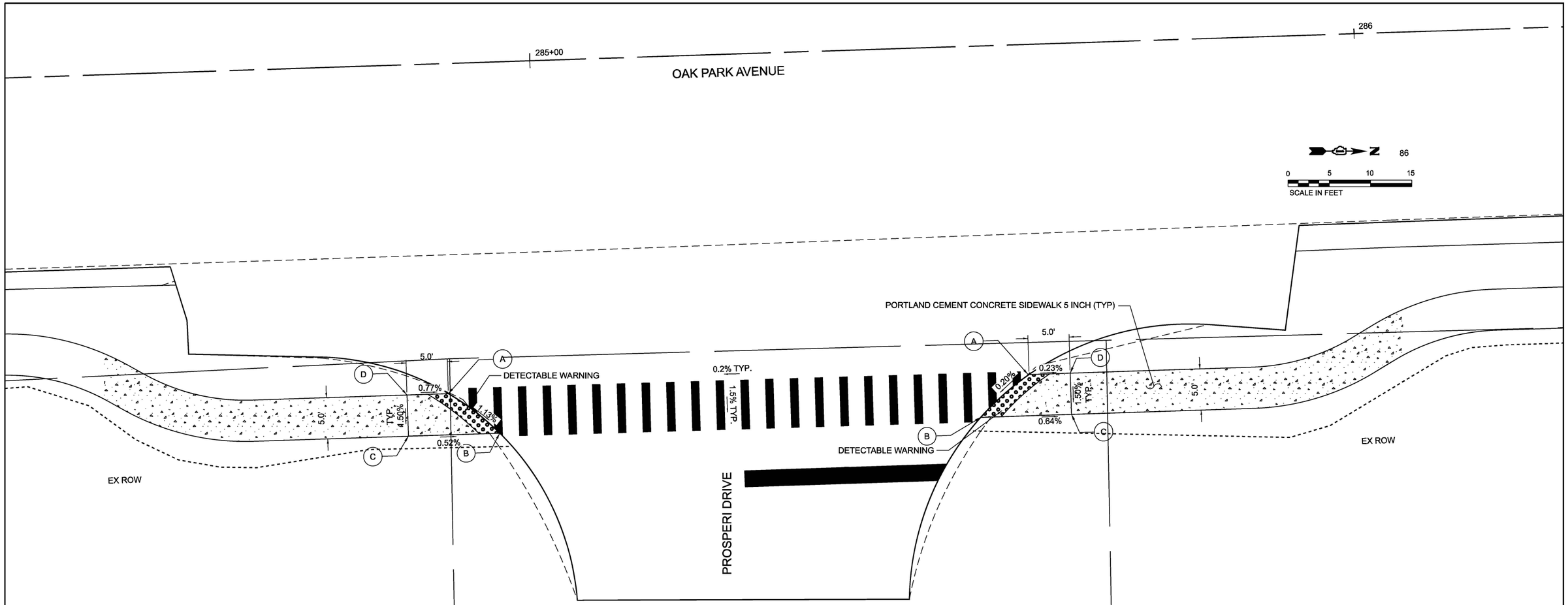

	STATION	OFFSET	ELEVATION
A	284+88.80	40.00	697.37
B	284+94.87	45.00	697.28
C	284+83.79	45.00	697.34
D	284+83.79	40.00	697.41

	STATION	OFFSET	ELEVATION
A	285+59.25	40.00	697.43
B	285+53.23	45.00	697.40
C	285+64.25	45.00	697.35
D	285+64.25	40.00	697.42

MODEL: ADA-1 [Sheet]
FILE NAME: c:\pwworking\primera\pwprod\mmathews\dms56232\D162W20-sht-ada.dgn

Primera
650 W. JACKSON BLVD. SUITE 600 . CHICAGO IL 60661 P:312-686-0910 F:312-686-0415

USER NAME = mmathews	DESIGNED - MM	REVISED -	
	DRAWN - MM	REVISED -	
	CHECKED - JR	REVISED -	
PLOT DATE = 5/4/2026	DATE - 03/06/2026	REVISED -	

STATE OF ILLINOIS
DEPARTMENT OF TRANSPORTATION

OAK PARK AVENUE OVER I-80
ADA RAMP DETAILS

SCALE: | SHEET 2 OF 5 SHEETS | STA. | TO STA.

F.A.I RTE.	SECTION	COUNTY	TOTAL SHEETS	SHEET NO.
80	FAI 80 23 Bridge Replacement 2	COOK	158	69
		CONTRACT NO. 62W20		
		ILLINOIS	FED. AID PROJECT	

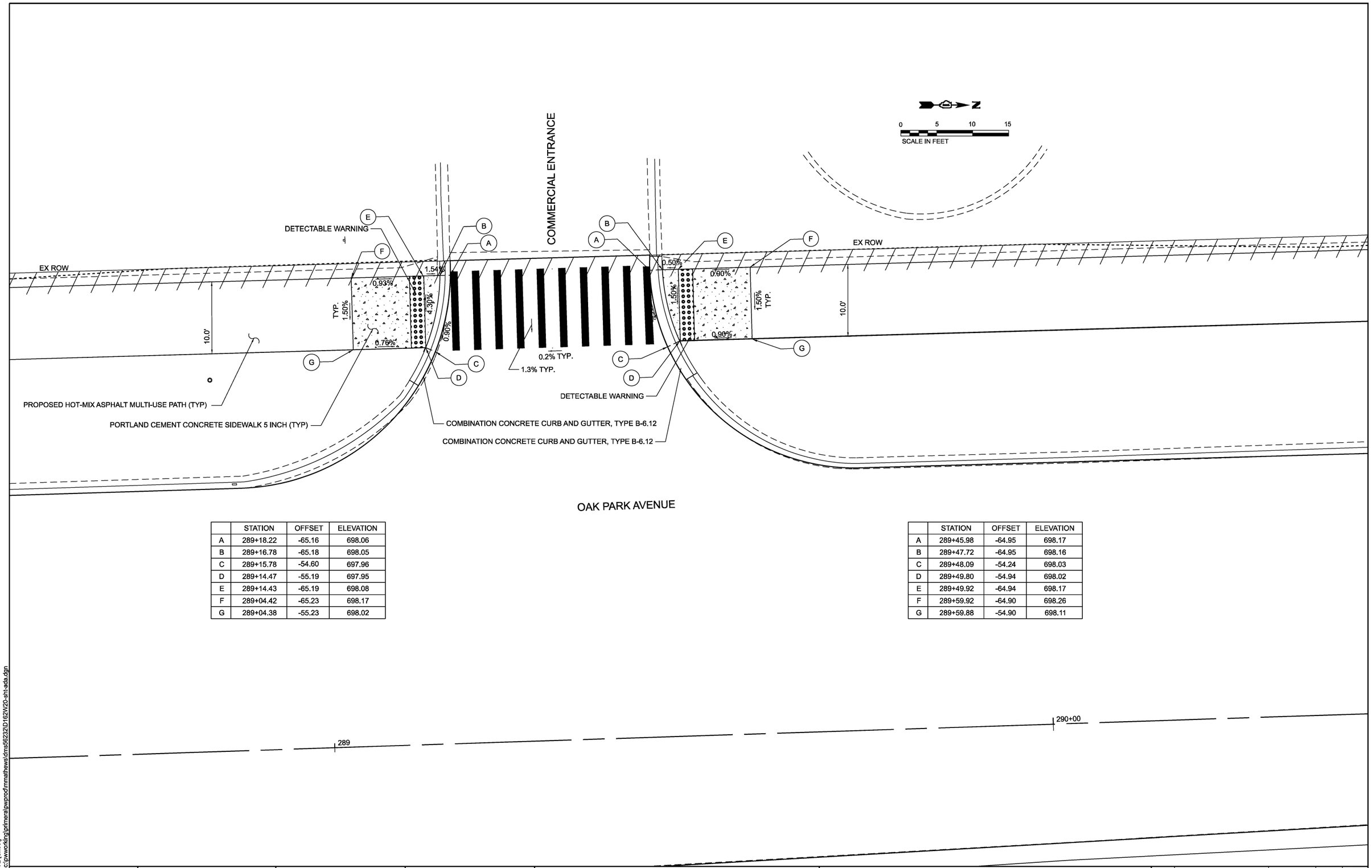

	STATION	OFFSET	ELEVATION
A	289+18.22	-65.16	698.06
B	289+16.78	-65.18	698.05
C	289+15.78	-54.60	697.96
D	289+14.47	-55.19	697.95
E	289+14.43	-65.19	698.08
F	289+04.42	-65.23	698.17
G	289+04.38	-55.23	698.02

	STATION	OFFSET	ELEVATION
A	289+45.98	-64.95	698.17
B	289+47.72	-64.95	698.16
C	289+48.09	-54.24	698.03
D	289+49.80	-54.94	698.02
E	289+49.92	-64.94	698.17
F	289+59.92	-64.90	698.26
G	289+59.88	-54.90	698.11

MODEL: ADA-2 [Sheet]
FILE NAME: c:\pwworking\primera\pwprod\mmathews\dms56232\D162W20-sht-ada.dgn

Primera
650 W. JACKSON BLVD. SUITE 608 . CHICAGO IL 60661 P:312-986-0110 F:312-986-0115

USER NAME = mmathews	DESIGNED - MM	REVISED -	
	DRAWN - MM	REVISED -	
	CHECKED - JR	REVISED -	
PLOT DATE = 5/4/2026	DATE - 03/06/2026	REVISED -	

STATE OF ILLINOIS
DEPARTMENT OF TRANSPORTATION

OAK PARK AVENUE OVER I-80
ADA RAMP DETAILS

SCALE: | SHEET 3 OF 5 SHEETS | STA. | TO STA.

F.A.I RTE.	SECTION	COUNTY	TOTAL SHEETS	SHEET NO.
80	FAI 80 23 Bridge Replacement 2	COOK	158	70
		CONTRACT NO. 62W20		
	ILLINOIS FED. AID PROJECT			

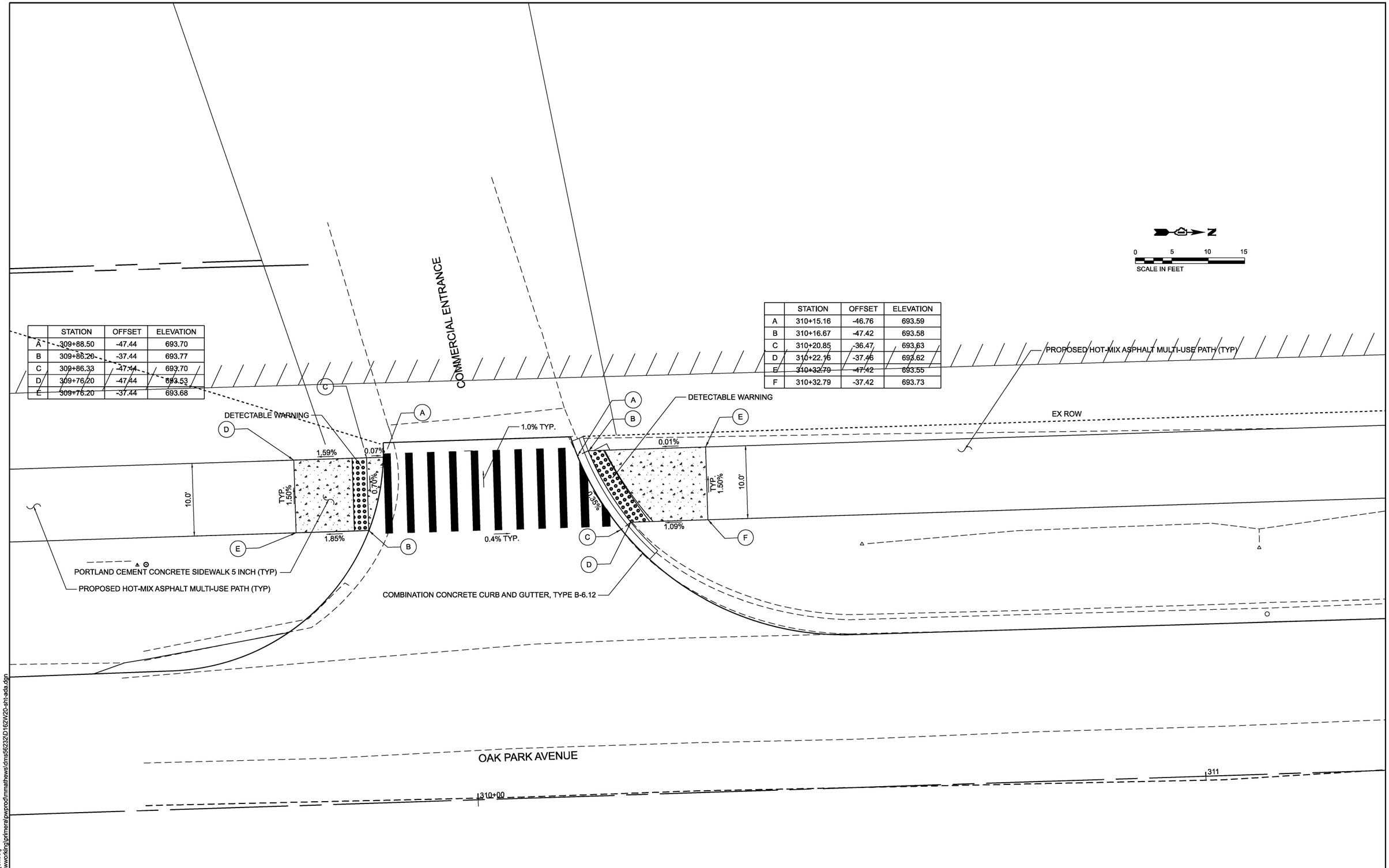

	STATION	OFFSET	ELEVATION
A	309+88.50	-47.44	693.70
B	309+86.20	-37.44	693.77
C	309+86.33	-47.44	693.70
D	309+76.20	-47.44	693.53
E	309+76.20	-37.44	693.68

	STATION	OFFSET	ELEVATION
A	310+15.16	-46.76	693.59
B	310+16.67	-47.42	693.58
C	310+20.85	-36.47	693.63
D	310+22.16	-37.46	693.62
E	310+32.79	-47.42	693.55
F	310+32.79	-37.42	693.73

MODEL: ADA-3 [Sheet]
FILE NAME: c:\pwworking\primera\pwprod\mmathews\dms56232\D162W20-sht-ada.dgn

Primera
650 W. JACKSON BLVD. SUITE 600 . CHICAGO IL 60661 P:312-686-8910 F:312-686-8415

USER NAME = mmathews	DESIGNED - MM	REVISED -	
	DRAWN - MM	REVISED -	
	CHECKED - JR	REVISED -	
PLOT DATE = 5/4/2026	DATE - 03/06/2026	REVISED -	

STATE OF ILLINOIS
DEPARTMENT OF TRANSPORTATION

OAK PARK AVENUE OVER I-80
ADA RAMP DETAILS

SCALE: | SHEET 4 OF 5 SHEETS | STA. | TO STA.

F.A.I RTE.	SECTION	COUNTY	TOTAL SHEETS	SHEET NO.
80	FAI 80 23 Bridge Replacement 2	COOK	158	71
		CONTRACT NO. 62W20		
		ILLINOIS	FED. AID PROJECT	

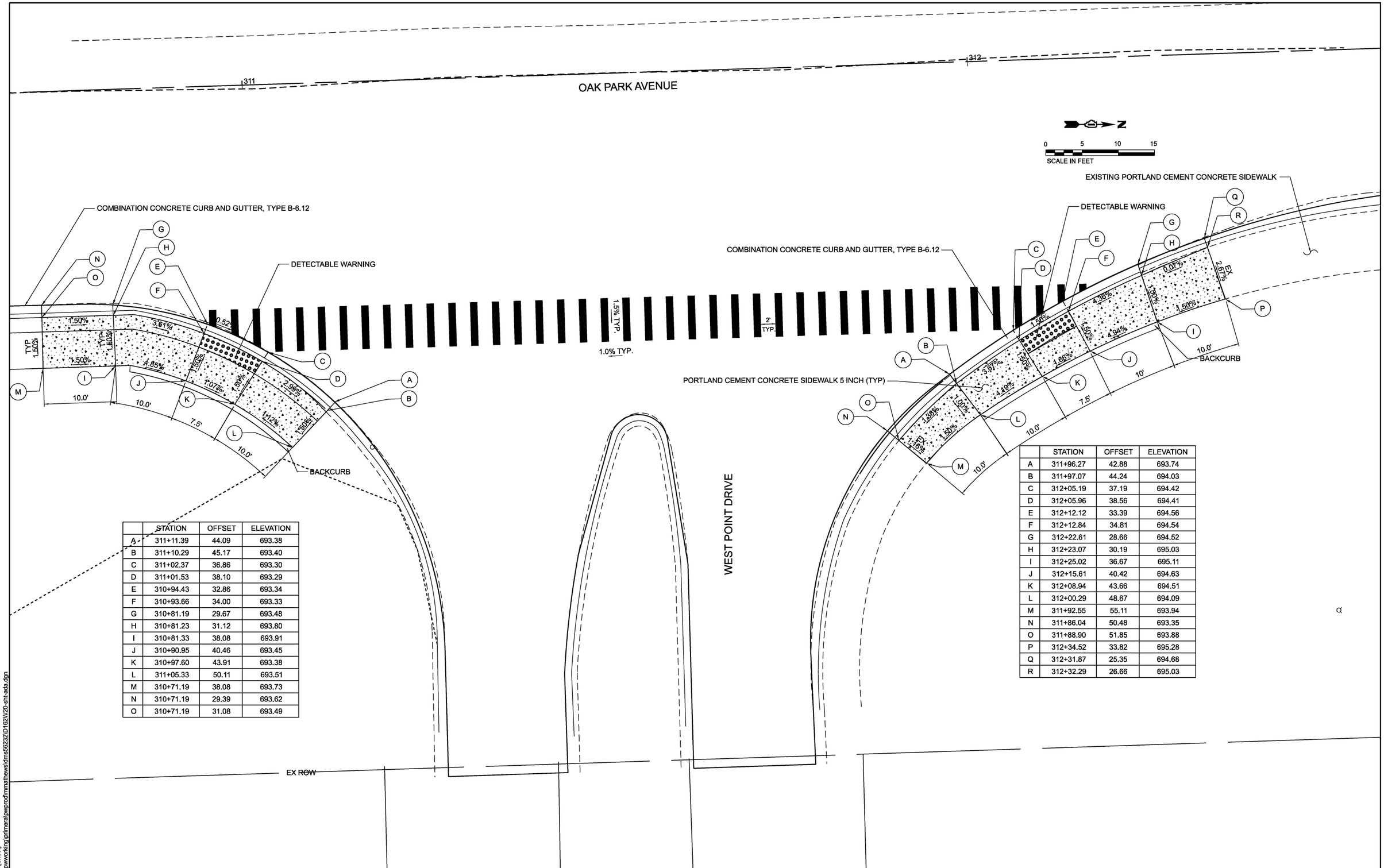

	STATION	OFFSET	ELEVATION
A	311+11.39	44.09	693.38
B	311+10.29	45.17	693.40
C	311+02.37	36.86	693.30
D	311+01.53	38.10	693.29
E	310+94.43	32.86	693.34
F	310+93.66	34.00	693.33
G	310+81.19	29.67	693.48
H	310+81.23	31.12	693.80
I	310+81.33	38.08	693.91
J	310+90.95	40.46	693.45
K	310+97.60	43.91	693.38
L	311+05.33	50.11	693.51
M	310+71.19	38.08	693.73
N	310+71.19	29.39	693.62
O	310+71.19	31.08	693.49

	STATION	OFFSET	ELEVATION
A	311+96.27	42.88	693.74
B	311+97.07	44.24	694.03
C	312+05.19	37.19	694.42
D	312+05.96	38.56	694.41
E	312+12.12	33.39	694.56
F	312+12.84	34.81	694.54
G	312+22.61	28.66	694.52
H	312+23.07	30.19	695.03
I	312+25.02	36.67	695.11
J	312+15.61	40.42	694.63
K	312+08.94	43.66	694.51
L	312+00.29	48.67	694.09
M	311+92.55	55.11	693.94
N	311+86.04	50.48	693.35
O	311+88.90	51.85	693.88
P	312+34.52	33.82	695.28
Q	312+31.87	25.35	694.68
R	312+32.29	26.66	695.03

MODEL: ADA-4 [Sheet]
FILE NAME: c:\pwworking\primera\pwprod\mmathews\dms56232\D162W20-sht-ada.dgn

Primera
650 W. JACKSON BLVD. SUITE 600 . CHICAGO IL 60661 P:312-686-0910 F:312-686-0415

USER NAME = mmathews	DESIGNED - MM	REVISED -	
	DRAWN - MM	REVISED -	
	CHECKED - JR	REVISED -	
PLOT DATE = 5/4/2026	DATE - 03/06/2026	REVISED -	

STATE OF ILLINOIS
DEPARTMENT OF TRANSPORTATION

OAK PARK AVENUE OVER I-80
ADA RAMP DETAILS

SCALE: SHEET 5 OF 5 SHEETS STA. TO STA.

F.A.I RTE.	SECTION	COUNTY	TOTAL SHEETS	SHEET NO.
80	FAI 80 23 Bridge Replacement 2	COOK	158	72
		CONTRACT NO. 62W20		
		ILLINOIS	FED. AID PROJECT	

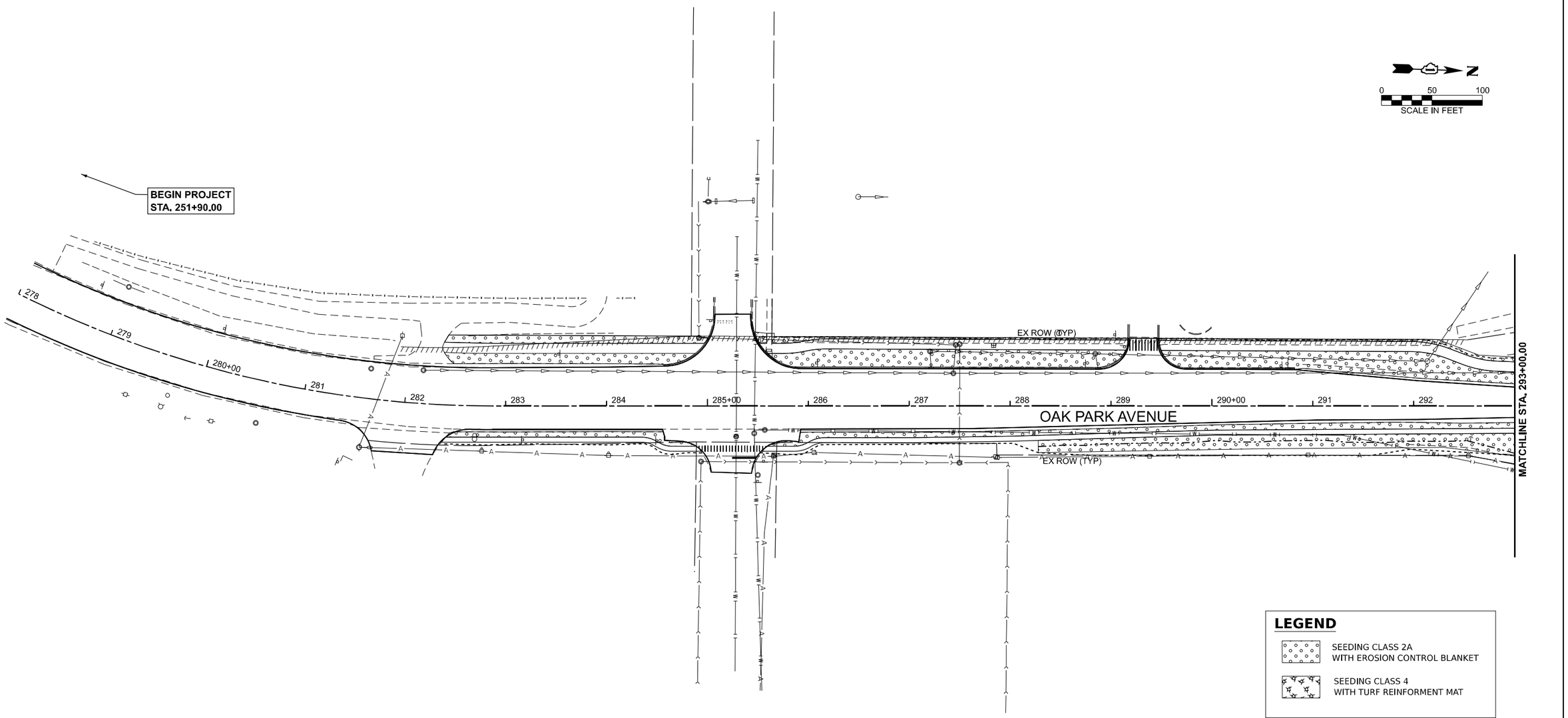

MODEL: D162W20-sht-lndscp-01
FILE NAME: c:\pw\working\primeral\pwprod\nguyen2\dms562321\D162W20-sht-lndscp-01.dgn

MILLENNIA PROFESSIONAL SERVICES
www.millennia.pro

USER NAME = Inguyen	DESIGNED - TVN	REVISED -	
	DRAWN - JP/SKP	REVISED -	
	CHECKED - TW	REVISED -	
PLOT DATE = 5/5/2026	DATE - 05/06/2026	REVISED -	

STATE OF ILLINOIS
DEPARTMENT OF TRANSPORTATION

OAK PARK AVENUE OVER I-80
LANDSCAPING PLAN

SCALE: 1"=50' | SHEET 1 OF 3 SHEETS | STA. 278+00.00 | TO STA. 293+00.00

F.A.I RTE.	SECTION	COUNTY	TOTAL SHEETS	SHEET NO.
80	FAI 80 23 Bridge Replacement 2	COOK	158	73
		CONTRACT NO. 62W20		
	ILLINOIS	FED. AID PROJECT		

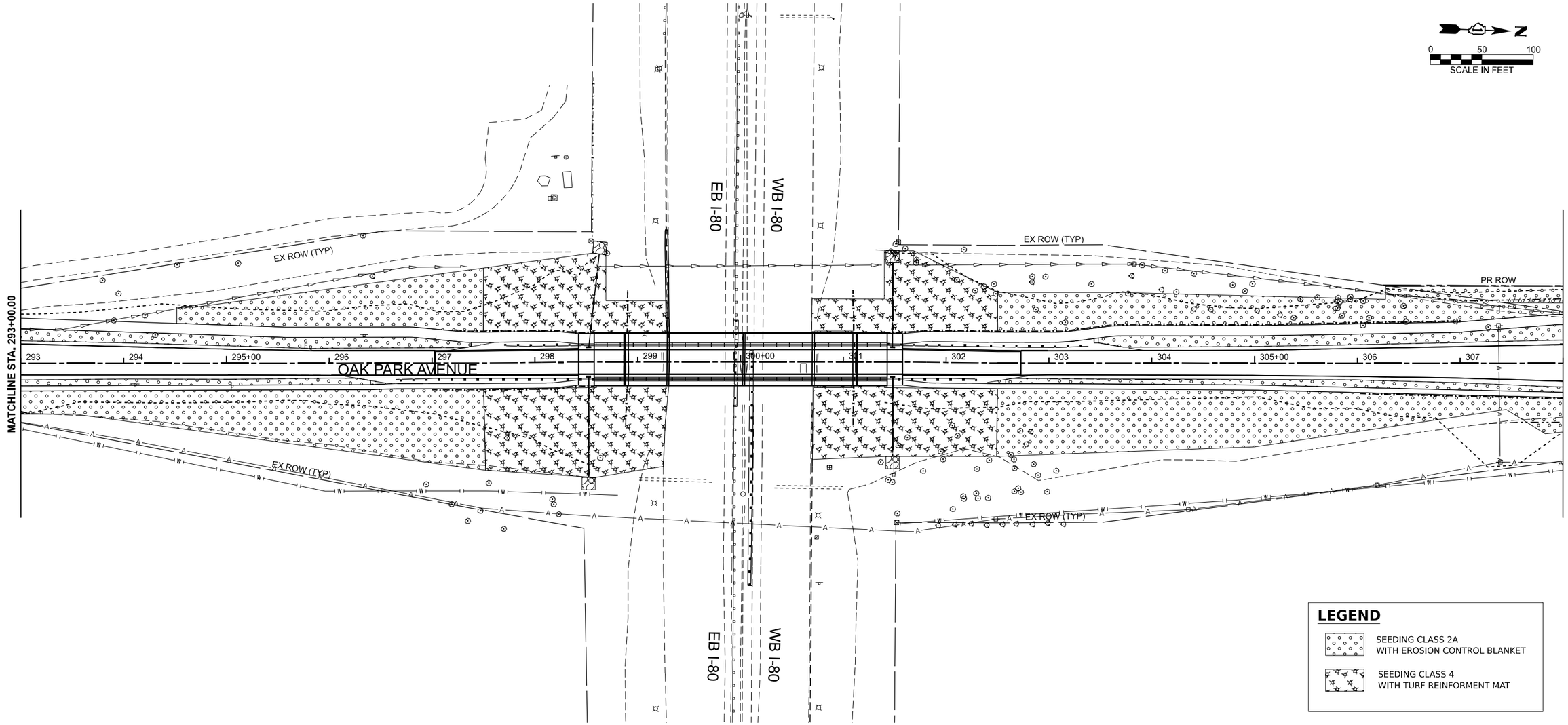

MODEL: D162W20-sht-lndscp-02
FILE NAME: c:\pwworking\primeral\pwprod\tnguyen2\dms56232\D162W20-sht-lndscp-02.dgn

MILLENNIA PROFESSIONAL SERVICES
www.millennia.pro

USER NAME = tnguyen	DESIGNED - TVN	REVISED -	
	DRAWN - JP/SKP	REVISED -	
	CHECKED - TW	REVISED -	
PLOT DATE = 5/5/2026	DATE - 05/06/2026	REVISED -	

STATE OF ILLINOIS
DEPARTMENT OF TRANSPORTATION

OAK PARK AVENUE OVER I-80
LANDSCAPING PLAN

SCALE: 1"=50' | SHEET 2 OF 3 SHEETS | STA. 293+00.00 | TO STA. 308+00.00

F.A.I RTE.	SECTION	COUNTY	TOTAL SHEETS	SHEET NO.
80	FAI 80 23 Bridge Replacement 2	COOK	158	74
		CONTRACT NO. 62W20		
	ILLINOIS FED. AID PROJECT			

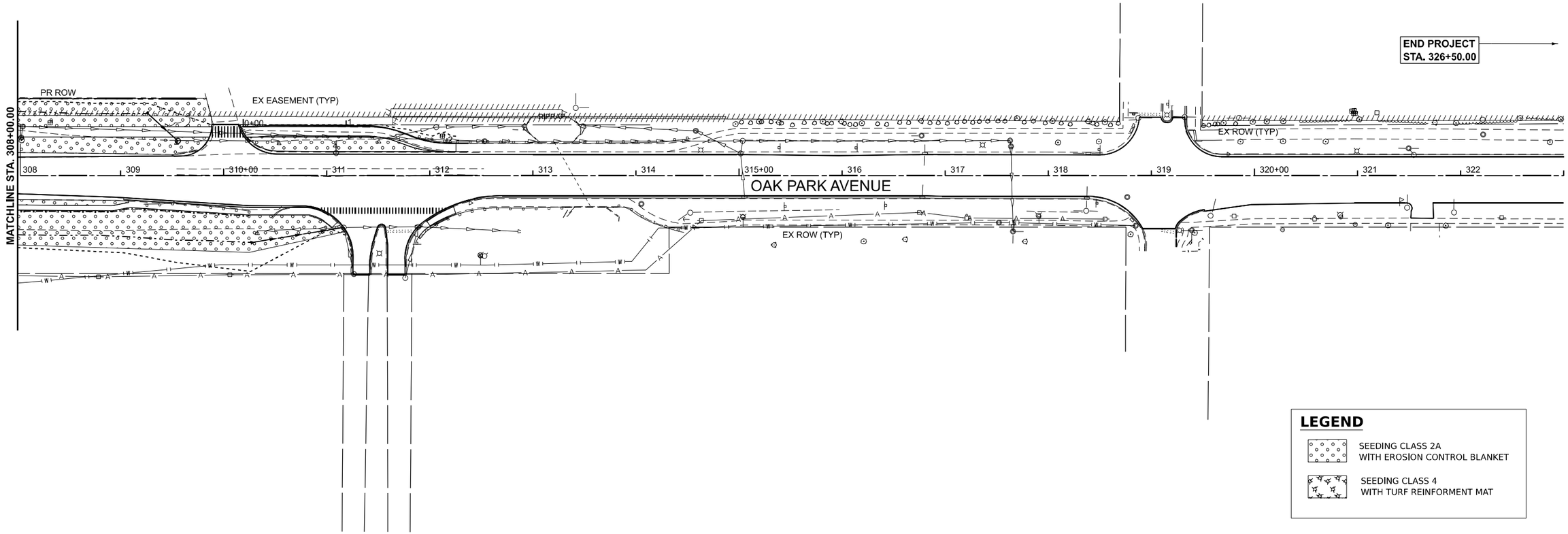

MODEL: D162W20-sht-lndscp-03
FILE NAME: c:\pwworking\primera\pwprod\tnguyen2\dms56232\D162W20-sht-lndscp-03.dgn

MILLENNIA PROFESSIONAL SERVICES
www.millennia.pro

USER NAME = tnguyen	DESIGNED - TVN	REVISED -	
	DRAWN - JP/SKP	REVISED -	
	CHECKED - TW	REVISED -	
PLOT DATE = 4/28/2026	DATE - 05/06/2026	REVISED -	

STATE OF ILLINOIS
DEPARTMENT OF TRANSPORTATION

OAK PARK AVENUE OVER I-80
LANDSCAPING PLAN

SCALE: 1"=50' | SHEET 3 OF 3 SHEETS | STA. 308+00.00 | TO STA. 323+00.00

F.A.I RTE.	SECTION	COUNTY	TOTAL SHEETS	SHEET NO.
80	FAI 80 23 Bridge Replacement 2	COOK	158	75
		CONTRACT NO. 62W20		
	ILLINOIS FED. AID PROJECT			

GENERAL LIGHTING NOTES

1. EXISTING UNDERPASS LUMINAIRES SHALL BE REMOVED FROM NIGHTTIME OPERATION WITH NO TEMPORARY LIGHTING REQUIRED DURING CONSTRUCTION. THE CONTRACTOR SHALL BE RESPONSIBLE FOR MAINTAINING THE OPERATION OF LIGHTING SYSTEMS ADJACENT TO THE WORK, WHICH MAY BE IMPACTED BY THE WORK. THE CONTRACTOR WILL ASSUME CONTINUED RESPONSIBILITY UNTIL IDOT HAS TAKEN ACCEPTANCE OF THE SYSTEM. AT NO TIME SHALL THE CONVENTIONAL POLE LUMINAIRES BE LEFT UNLIT.

LEGEND

EXISTING LIGHT POLE, ARM AND LUMINAIRE TO REMAIN.

PROPOSED LED UNDERPASS LUMINAIRE.
SUSPENDED MOUNTED UNDER BRIDGE, LUMINAIRE OUTPUT DESIGNATION D.

PROPOSED UNIT DUCT, SIZE AS INDICATED ON PLANS.

PROPOSED CABLE IN CONDUIT, SIZE AND TYPE AS NOTED.

PROPOSED JUNCTION BOX. 6" X 6" X 4".

J2 PROPOSED JUNCTION BOX. 12" X 12" X 6".

J3 PROPOSED JUNCTION BOX. 20" X 20" X 8".

IDOT DISTRICT 1 STANDARDS

BE-702	MISC. ELECTRICAL DETAILS SHEET A
BE-901	SUSPENDED MOUNT LED UNDERPASS LUMINAIRE INSTALLATION DETAILS

CABLE/CONDUIT SCHEDULE

(A) UNIT DUCT, 600V, 3-1/C NO.2 AND 1/C NO.4, GND 1 1/2" DIA.

(B) 3-1/C NO.10 AND 1/C NO.10, GND IN 1" PVCC RGC.

(C) 2-1/C NO. 10 & 1/C NO. 10 GND IN 3/4" LIQUID TIGHT FLEXIBLE CONDUIT.

INDEX OF SHEETS

LT-01	GENERAL NOTES, LEGEND, SCHEDULES AND INDEX OF SHEETS
LT-02	LIGHTING PLAN
LT-03	PROPOSED WIRING DIAGRAM
LT-04 & LT-05	LIGHTING DETAILS BE-702 & BE-901

		CONSTR. CODE
		62W20
		LIGHTING
CODE NO.	ITEM	0021
		URBAN

CODE NO.	ITEM	UNIT	TOTAL QUANTITY	URBAN
81100320	CONDUIT ATTACHED TO STRUCTURE, 1" DIA., PVC COATED GALVANIZED STEEL	FOOT	440	440
81100805	CONDUIT ATTACHED TO STRUCTURE, 3" DIA., PVC COATED GALVANIZED STEEL	FOOT	30	30
81300220	JUNCTION BOX, STAINLESS STEEL, ATTACHED TO STRUCTURE, 6" X 6" X 4"	EACH	4	4
81300550	JUNCTION BOX, STAINLESS STEEL, ATTACHED TO STRUCTURE, 12" X 12" X 6"	EACH	2	2
81300915	JUNCTION BOX, STAINLESS STEEL, ATTACHED TO STRUCTURE, 20" X 20" X 8"	EACH	2	2
81603081	UNIT DUCT, 600V, 3-1C NO.2, 1/C NO.4 GROUND, (XLP-TYPE USE), 1 1/2" DIA.	FOOT	260	260
81702110	ELECTRIC CABLE IN CONDUIT, 600V (XLP-TYPE USE) 1/C NO. 10	FOOT	1030	1030
82110026	LUMINAIRE, LED, UNDERPASS, SUSPENDED, OUTPUT DESIGNATION D	EACH	4	4
X8000003	MAINTENANCE OF LIGHTING SYSTEM	CAL MO	12	12
84200600	REMOVAL OF LIGHTING UNIT, NO SALVAGE	EACH	8	8

LT–01

FILE NAME: C:\Users\blain\WI-Skies Dropbox\WI-Skies, LLC\Projects\(2629) IDOT Oak Park Bridge Replacement\CADD\D1620W20-Lighting Plan.dgn

Wi-Skies, LLC

USER NAME = blain	DESIGNED - DG	REVISED -	
	DRAWN - BH	REVISED -	
	CHECKED - JDM	REVISED -	
PLOT DATE = 6/18/2026	DATE - 6/19/2026	REVISED -	

STATE OF ILLINOIS
DEPARTMENT OF TRANSPORTATION

OAK PARK AVENUE OVER I-80
LIGHTING PLAN

SCALE: NONE | SHEET 1 OF 3 SHEETS | STA. | TO STA.

F.A.I RTE.	SECTION	COUNTY	TOTAL SHEETS	SHEET NO.
80	FAI 80 23 Bridge Replacement 2	COOK	158	75A
		CONTRACT NO. 62W20		
	ILLINOIS FED. AID PROJECT			

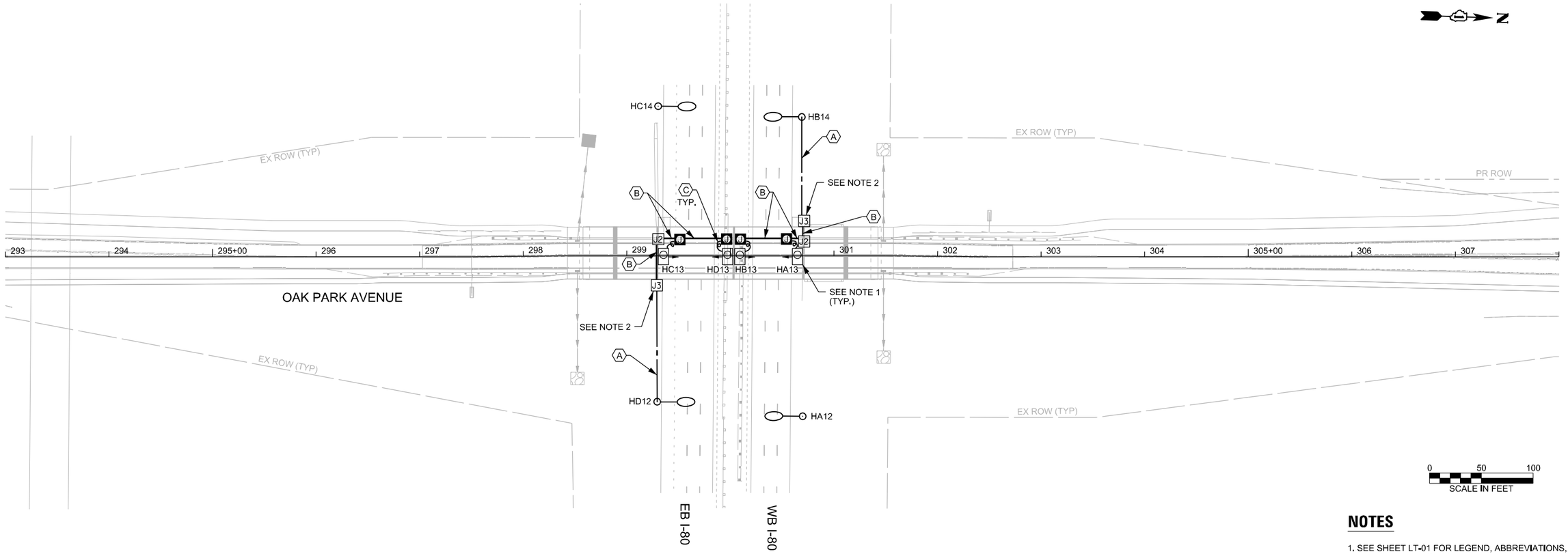

NOTES

1. SEE SHEET LT-01 FOR LEGEND, ABBREVIATIONS, AND GENERAL NOTES.
2. INSTALL FUSEHOLDER WITH 30 AMP FUSES & NEUTRAL SLUG INSIDE THE JUNCTION BOX.
3. UNDERPASS LUMINAIRES SETBACK SHOULD BE 10 FT FROM EDGE OF TRAVELED PAVEMENT. MOUNTING HEIGHT IS 16'-3" AND NO LESS THAN BOTTOM OF GIRDER.

LT–02

FILE NAME: C:\Users\blain\Wi-Skies Dropbox\Wi-Skies, LLC\Projects\(2629) IDOT Oak Park Bridge Replacement\CADD\D162W20\Lighting Plan.dgn

Wi-Skies, LLC

USER NAME = blain	DESIGNED - DG	REVISED -		
	DRAWN - BH	REVISED -		
	CHECKED - JDM	REVISED -		
PLOT DATE = 6/19/2026	DATE - 6/19/2026	REVISED -		

STATE OF ILLINOIS
DEPARTMENT OF TRANSPORTATION

OAK PARK AVENUE OVER I-80
LIGHTING PLAN

SCALE: 1"=50' | SHEET 2 OF 3 SHEETS | STA. 293+00.00 | TO STA. 308+00.00

F.A.I RTE.	SECTION	COUNTY	TOTAL SHEETS	SHEET NO.
80	FAI 80 23 Bridge Replacement 2	COOK	158	75B
		CONTRACT NO. 62W20		
	ILLINOIS FED. AID PROJECT			

LEGEND

- EXISTING ROADWAY LUMINAIRE, RED PHASE WIRE.
- PROPOSED LED UNDERPASS LUMINAIRE, RED PHASE WIRE.
- EXISTING ROADWAY LUMINAIRE, BLACK PHASE WIRE.
- PROPOSED LED UNDERPASS LUMINAIRE, BLACK PHASE WIRE.

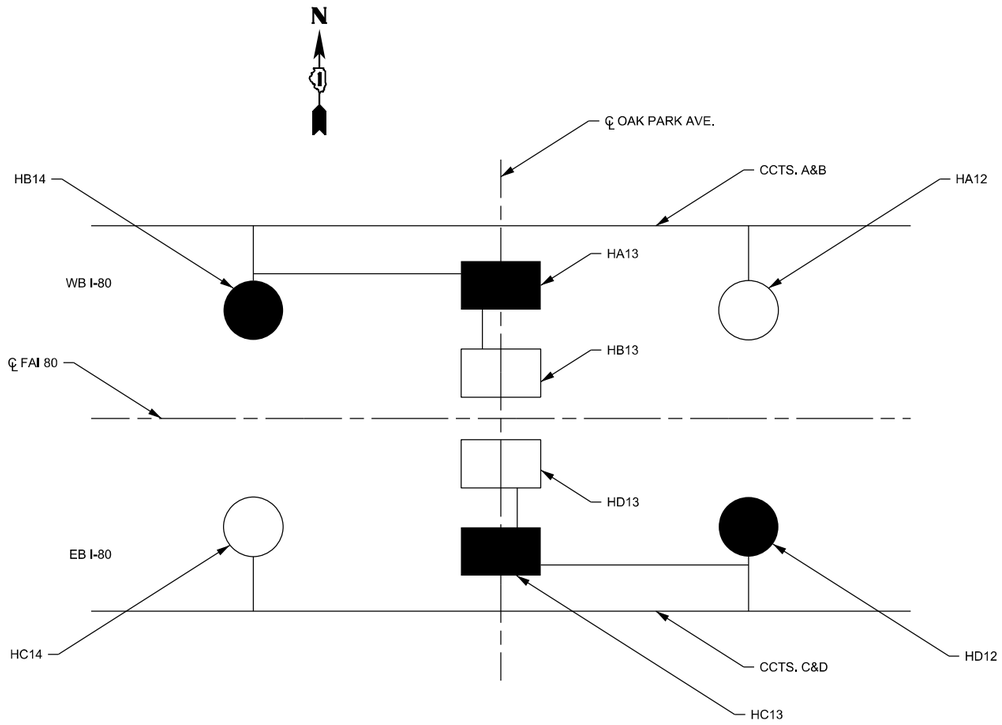

PROPOSED WIRING DIAGRAM

LT–03

FILE NAME: C:\Users\blain\Wi-Skies Dropbox\Wi-Skies, LLC\Projects\(2629) IDOT Oak Park Bridge Replacement\CADD\D162W20-Lighting Plan.dgn

Wi-Skies, LLC

USER NAME ▪ blain	DESIGNED - DG	REVISED -	
	DRAWN - BH	REVISED -	
	CHECKED - JDM	REVISED -	
PLOT DATE ▪ 6/22/2026	DATE - 6/22/2026	REVISED -	

STATE OF ILLINOIS
DEPARTMENT OF TRANSPORTATION

OAK PARK AVENUE OVER I-80
PROPOSED WIRING DIAGRAM

SCALE: NONE | SHEET 3 OF 3 SHEETS | STA. | TO STA.

F.A.I RTE.	SECTION	COUNTY	TOTAL SHEETS	SHEET NO.
80	FAI 80 23 Bridge Replacement 2	COOK	158	75C
		CONTRACT NO. 62W20		
	ILLINOIS FED. AID PROJECT			

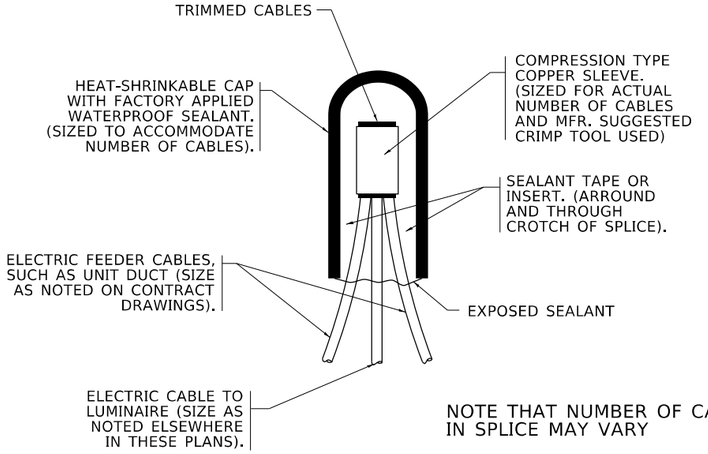

TYPICAL SPLICE DETAIL
N.T.S.

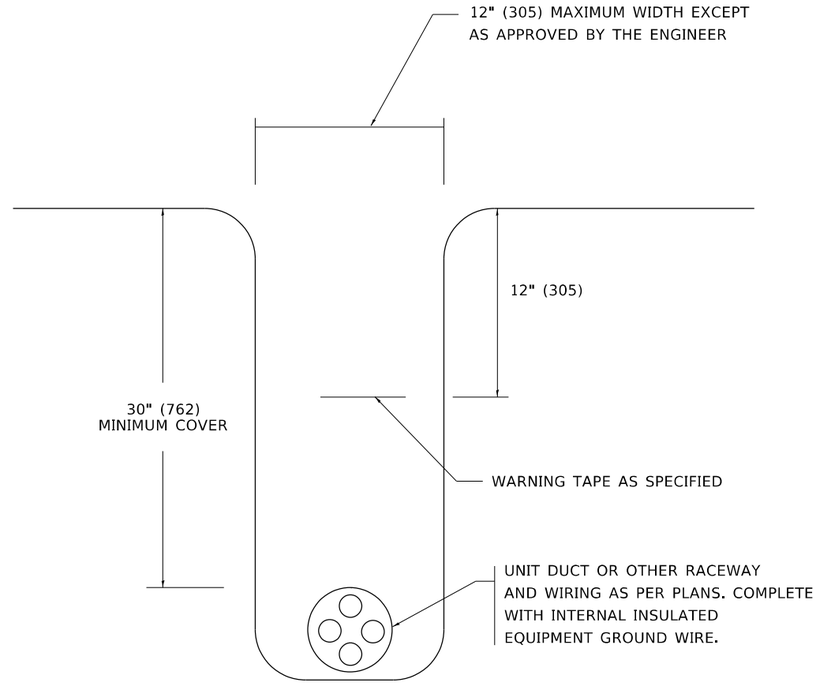

TYPICAL WIRING IN TRENCH DETAIL
N.T.S.

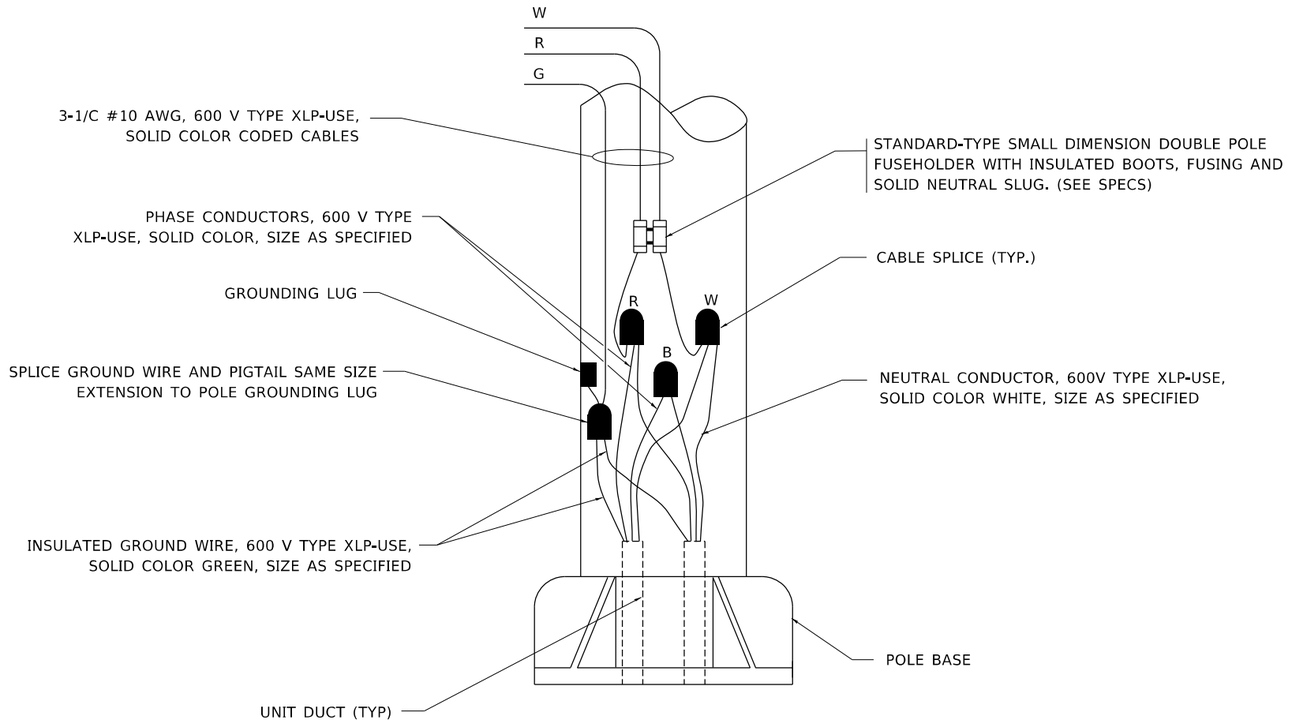

POLE WIRING DETAIL
N.T.S.

LT-04

MODEL: Default
FILE NAME: pw:\\bkenroundo\Active-100:PWIDOT\Documents\IDOT Offices\DeKalb\Projects\DeKalb\d22x24\CADData\CADSheetsite702.dgn

USER NAME = lleysa	DESIGNED -	REVISED - 02/04/2020	**STATE OF ILLINOIS** **DEPARTMENT OF TRANSPORTATION**
	DRAWN -	REVISED -	
PLOT SCALE = 50.0000 ' / in.	CHECKED -	REVISED -	
PLOT DATE = 3/2/2020	DATE - 08/08/2003	REVISED -	

MISC. ELECTRICAL DETAILS
SHEET A

SCALE: NONE | SHEET 1 OF 1 SHEETS | STA. | TO STA.

F.A. RTE.	SECTION	COUNTY	TOTAL SHEETS	SHEET NO.
80	FAI 80 23 Bridge Replacement 2	COOK	158	75D
	BE-702	CONTRACT NO. 62W20		
	ILLINOIS FED. AID PROJECT			

be702.dgn 3/2/2020 7:37:37 AM Lleysa

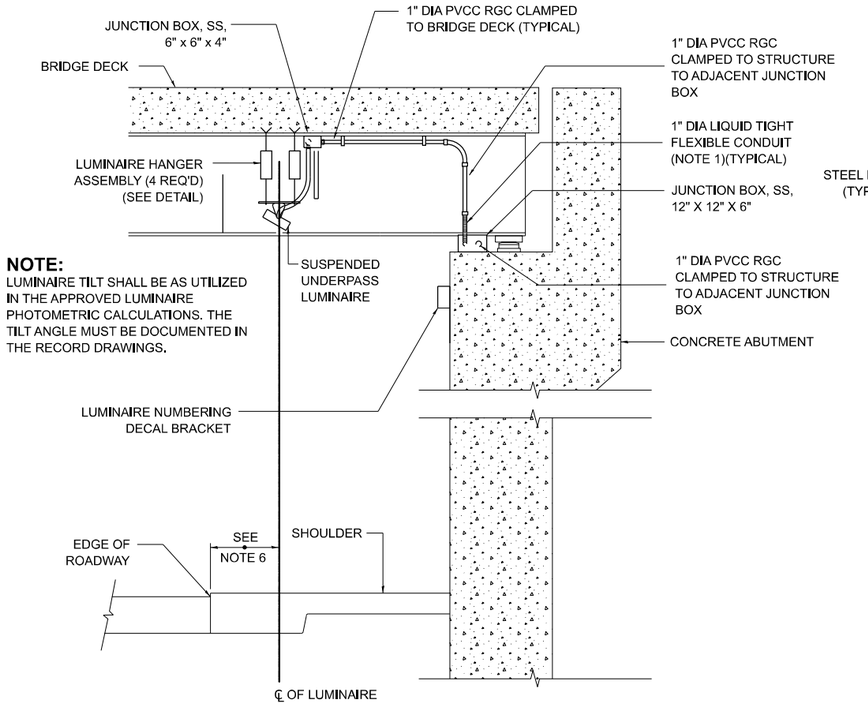

NOTE:
LUMINAIRE TILT SHALL BE AS UTILIZED IN THE APPROVED LUMINAIRE PHOTOMETRIC CALCULATIONS. THE TILT ANGLE MUST BE DOCUMENTED IN THE RECORD DRAWINGS.

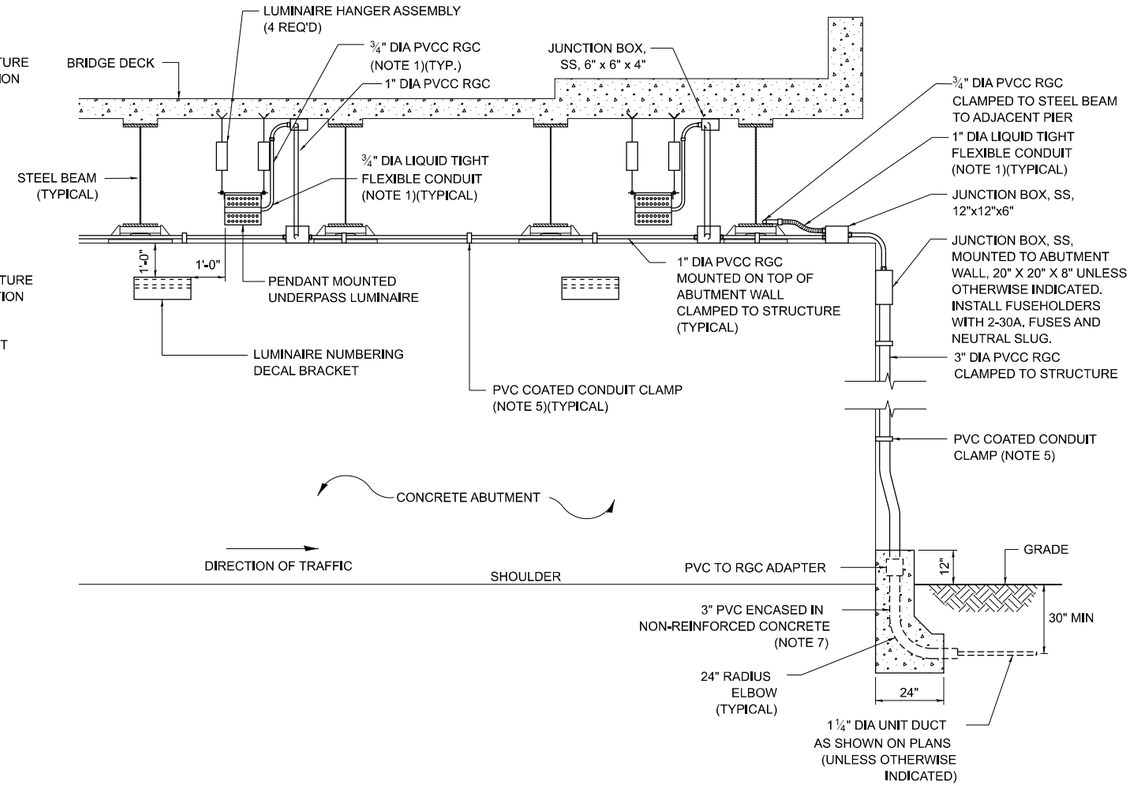

NOTES:

1. LIQUID TIGHT FLEXIBLE METAL CONDUIT, MAXIMUM LENGTH 6'-0", TYPICAL FOR EACH INSTANCE AS SHOWN, PROVIDE PVC COATED RIGID GALVANIZED STEEL CONDUIT AS REQUIRED NOT TO EXCEED 6'-0" OF FLEXIBLE LIQUID TIGHT METAL CONDUIT. LIQUID TIGHT FLEXIBLE METAL CONDUIT WILL BE INCLUDED IN THE COST OF THE CONDUIT ATTACHED TO STRUCTURE, OF THE CORRESPONDING DIA., GALVANIZED STEEL, PVC COATED PAY ITEM EXCEPT THAT " DIA. CONDUIT AND " DIA. FLEXIBLE CONDUIT SHALL BE INCLUDED IN THE COST OF UNDERPASS LUMINAIRE INSTALLATION.
2. SEE UNDERPASS LIGHTING PLANS FOR INSTALLATION LOCATION OF UNDERPASS LIGHTING LUMINAIRES.
3. THE CONTRACTOR SHALL USE APPROVED SINGLE COIL FLARED LOOP INSERTS WHEN SUSPENDED MOUNTING AN UNDERPASS LUMINAIRE TO A NEW BRIDGE DECK. THE FLARED LOOP INSERTS MUST BE CAST INTO THE CONCRETE DECK. THE CONTRACTOR IS RESPONSIBLE FOR LOCATING AND COORDINATING THE INSERT LOCATIONS FOR MOUNTING THE UNDERPASS LIGHTING SYSTEM AS SHOWN ON THE PLANS WITH THE BRIDGE DECK CONTRACTOR. SEE DETAIL.
4. THE UNDERPASS LUMINAIRE HANGER ASSEMBLY COMPLETE WITH HEAVY DUTY ANCHORS/INSERTS AND ALL APPLICABLE HARDWARE SHALL BE INCLUDED IN THE COST OF THE UNDERPASS LUMINAIRE PAY ITEM.
5. SECURE THE CONDUIT WITH PVC COATED CONDUIT CLAMPS OR CONDUIT BEAM CLAMPS AS SHOWN AT 5'-0" INTERVALS FOR LATERALS AND WITHIN 2'-0" MAXIMUM FROM ANY JUNCTION BOX, FLEXIBLE CONDUIT, OR CHANGE IN DIRECTION. ALL PVC COATED CONDUIT CLAMPS OR BEAM CLAMPS SHALL BE INCLUDED WITH THE COST OF THE "CONDUIT ATTACHED TO STRUCTURE, OF THE CORRESPONDING DIA., GALVANIZED STEEL, PVC COATED" PAY ITEM.
6. ALL UNDERPASS LUMINAIRES MUST BE CENTERED IN THE BEAM SPACE AS INDICATED ON THE PLANS UNLESS OTHERWISE DIRECTED BY THE ENGR. LUMINAIRE SETBACK SHALL BE AS INDICATED IN PLANS FOR EACH SPECIFIC UNDERPASS
7. THE CONCRETE ENCASED CONDUIT TRANSITION SHALL BE INCLUDED IN THE COST OF THE GALVANIZED RIGID STEEL CONDUIT PAY ITEMS.
8. ALL CONDUIT ATTACHED TO STRUCTURE SHALL BE PVC COATED RIGID STEEL CONDUIT (PVCC RGC) TYPICAL.
9. IN NO INSTANCE SHALL ANY UNDERPASS LUMINAIRE OR ANY OTHER ELECTRICAL EQUIPMENT BE INSTALLED BELOW THE ELEVATION OF THE BOTTOM OF THE BRIDGE BEAM WHEN OVER ANY PAVEMENT (ROADWAY OR SHOULDER).

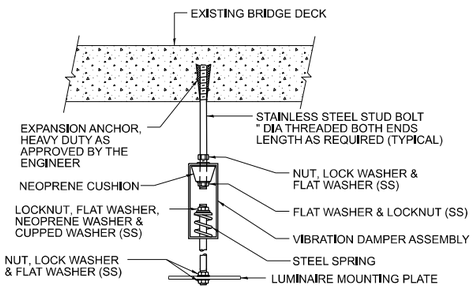

EXISTING BRIDGE DECK INSTALLATION

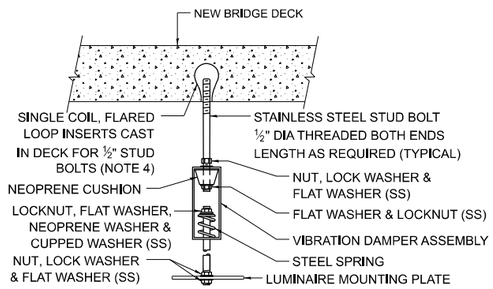

NEW BRIDGE DECK INSTALLATION

TYPICAL LUMINAIRE HANGER ASSEMBLY DETAILS

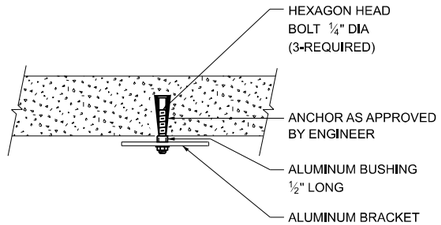

TOP VIEW

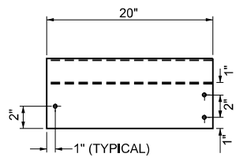

ELEVATION

LUMINAIRE NUMBERING DECAL BRACKET

NOT TO SCALE

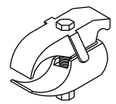

PVC COATED CONDUIT BEAM CLAMP
NOT TO SCALE

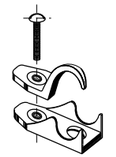

PVC COATED CONDUIT CLAMP
NOT TO SCALE

LT-05

USER NAME ■ lawrence,demanche	DESIGNED -	REVISED - 12/12/05	STATE OF ILLINOIS DEPARTMENT OF TRANSPORTATION	SUSPENDED MOUNT LED UNDERPASS LUMINAIRE INSTALLATION DETAILS	
	DRAWN -	REVISED - 12/17/25 - R. TOMSONS			
PLOT SCALE ■ 0.08333317 ' / in.	CHECKED -	REVISED - 03/02/26 - R. TOMSONS			
PLOT DATE ■ 3/2/2026	DATE -	REVISED -		SCALE: NONE SHEET 1 OF 1 SHEETS STA. TO STA.	

F.A.P RTE.	SECTION	COUNTY	TOTAL SHEETS	SHEET NO.
80	FAI 80 23 Bridge Replacement 2	COOK	158	75E
	BE-901	CONTRACT NO. 62W20		
	ILLINOIS FED. AID PROJECT			

MODEL: BE-901 [Sheet]
FILE NAME: c:\pw_work\pwlcol\lawrence.demanche@illinois.gov\d0950870\BE-901.dgn

BE-901.dgn 3/2/2026 12:36:27 PM User=lawrence,demanche

Benchmark: Cut square in end of concrete walk @ NE corner of Oak Park Avenue Bridge over I-80. Elev. 717.94.

Existing Structure: SN 016-0927 was originally constructed in 1967, under Section 1313-811 HB. In 1997, the super structure was raised 1 1/2", the deck was overlaid, and the superstructure was painted. The joints, slopewalls, abutment bearings, and part of the West fascia beam in span 3 were replaced. The structure is a four-span, continuous WF36x135 wide flange steel beam bridge, supported on stub abutments and multi-column and cap piers on spread footings. The overall structure length measures 226'-11" back-to-back of abutments with a 42'-0" out-to-out width.

Traffic Control: Traffic to be detoured during bridge reconstruction.

SEISMIC DATA

Seismic Retrofit Category (SRC) = C
Design Spectral Acceleration at 1.0 sec. (SD1) = 0.093g
Design Spectral Acceleration at 0.2 sec. (SDS) = 0.160g
Soil Site Class = D
Performance Level = 1

NOTE:

1. All structural steel shall be galvanized.

SCOPE OF WORK

1. Remove existing superstructure and bearings.
2. Construct new pier and abutment cap extensions.
3. Construct new composite superstructure on new bearings.
4. Remove approach slabs and bents and replace with new approach slabs.
5. Remove abutment backwalls and convert to semi-integral abutments with new abutment drainage system behind abutments.
6. Remove west wingwalls below proposed approach slab.
7. Remove portions of east wingwalls and reconstruct with wingwalls square to abutments.
8. Widen existing abutments to the west in kind with converted existing abutments and construct new wingwalls.
9. Widen existing piers to the west.
10. Raise existing pier crash walls to 5'-0" above grade elevation.
11. Repair deteriorated concrete on piers and abutments.
12. Reconstruct slope walls at both ends of bridge.
13. Apply concrete sealer to exposed surfaces of new concrete on widened sections of piers.
14. Remove and replace existing approach guardrail terminals.

DESIGN STRESSES

NEW CONSTRUCTION

f'c = 3,500 psi (Concrete Substructure)
f'c = 4,000 psi (Concrete Superstructure)
fy = 60,000 psi (Reinforcement)
fy = 50,000 psi (Steel, M270 Grade 50)

EXISTING CONSTRUCTION

fc = 1,400 psi (Substructure Concrete)
fs = 20,000 psi (Substructure Reinforcement)

DESIGN SPECIFICATIONS

AASHTO LRFD Bridge Design Specifications, 10th Edition, 2024

2006 Seismic Retrofitting Manual for Highway Structures: Part I - Bridges (FHWA-HRT-06-032)

LOADING HL-93

Allow 50#/sq.ft. For Future Wearing Surface
Live Load Deflection Limit Span/1000

STA. 303+03.20
RE-BUILT 20__ BY
STATE OF ILLINOIS
F.A.I. 80 SEC. F.A.I. 80 23 BRIDGE REPLACEMENT 2
LOADING HL-93
STR. NO. 016-0927

NAME PLATE

See Std. 515001

Existing Name Plate shall be cleaned and relocated next to new Name Plate. Cost included with Name Plates.

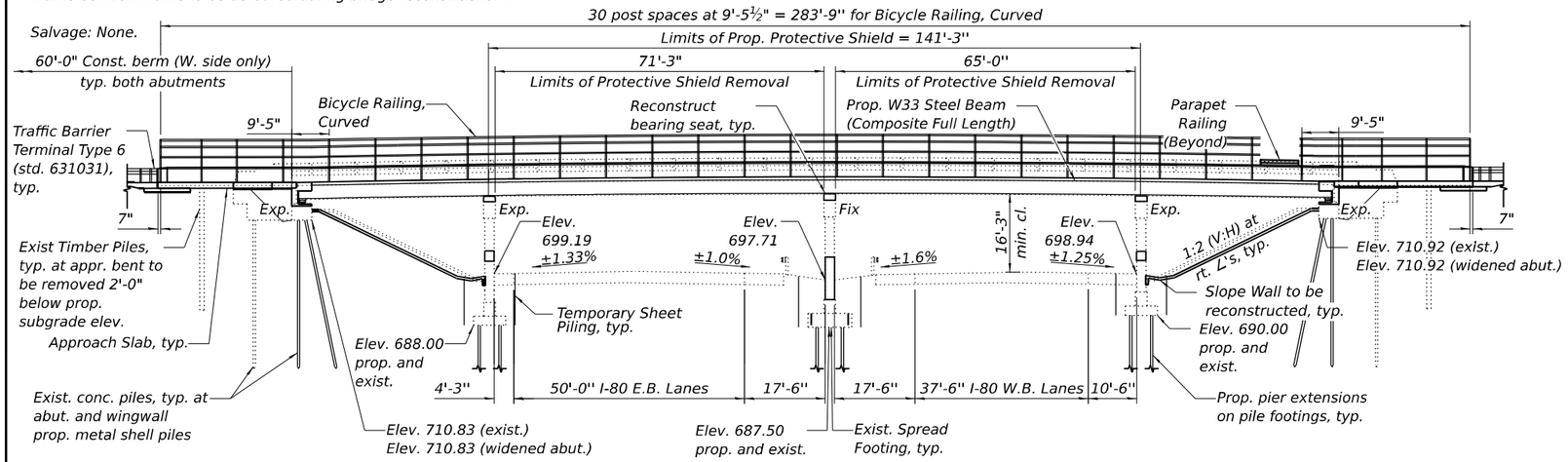

ELEVATION

LEGEND

- Soil Boring
- Exist. Guardrail
- Prop. Guardrail
- FO - Prop. Fiber Conduit

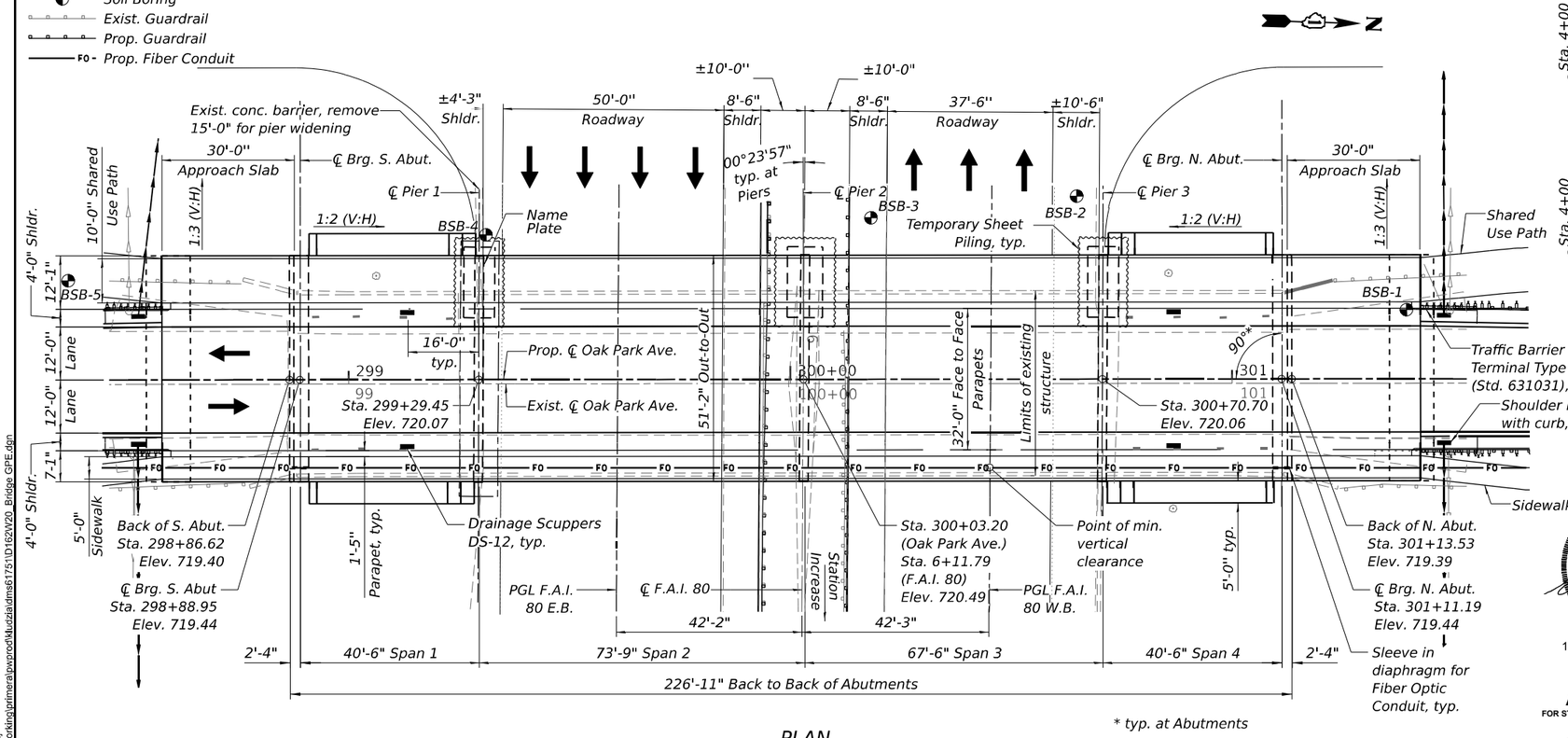

* typ. at Abutments

PLAN

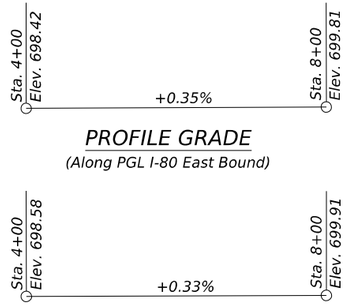

PROFILE GRADE

(Along PGL I-80 East Bound)

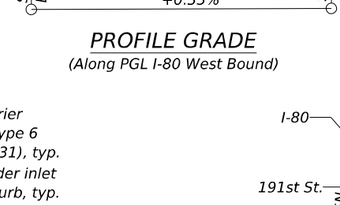

PROFILE GRADE

(Along PGL I-80 West Bound)

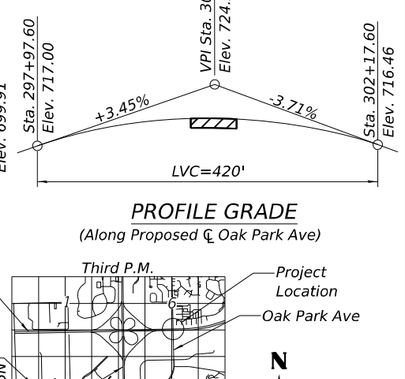

PROFILE GRADE

(Along Proposed ℄ Oak Park Ave)

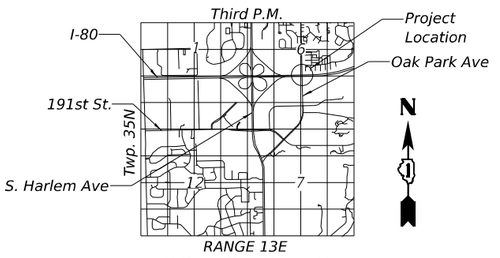

LOCATION SKETCH

STATE OF ILLINOIS
BRIAN T. BRODSKY
81-7569
REGISTERED STRUCTURAL ENGINEER
Exp. 11/30/26
5/6/26

APPROVED
FOR STRUCTURAL ADEQUACY ONLY
ENGINEER OF BRIDGES & STRUCTURES

GENERAL PLAN & ELEVATION
OAK PARK AVENUE OVER I-80
FAI 80 - SECTION FAI 80 23 BRIDGE REPLACEMENT 2
COOK COUNTY
STATION 303+03.20
STRUCTURE NO: 016-0927

MODEL: GPE[Sheet]
FILE NAME: c:\pwworking\prmeral\pwprod\kludzia\dms617751\D162W20_Bridge GPE.dgn

Ardmore Roderick

USER NAME = kingaludzia	DESIGNED - NMB	REVISED -	
	DRAWN - JPK	REVISED -	
	CHECKED - STB	REVISED -	
PLOT DATE = 5/6/2026	DATE - 5/6/2026	REVISED -	

STATE OF ILLINOIS
DEPARTMENT OF TRANSPORTATION

GENERAL PLAN AND ELEVATION
STRUCTURE NO. 016-0927
SHEET S-1 OF S-36 SHEETS

F.A.I RTE.	SECTION	COUNTY	TOTAL SHEETS	SHEET NO.
80	FAI 80 23 Bridge Replacement 2	COOK	158	76
		CONTRACT NO. 62W20		
		ILLINOIS	FED. AID PROJECT	

GENERAL NOTES

1. All new structural steel shall be galvanized. See Special Provision for "Hot Dip Galvanizing for Structural Steel".
2. Calculated weight of Structural Steel = 258,750 lbs. (M270 Grade 50)
   26,060 lbs. (M270 Grade 36)
3. No field welding is permitted except as specified in the contract documents.
4. Fasteners shall be ASTM F 3125 Grade A325 Type 1, hot-dip galvanized. See Special Provision for "Hot Dip Galvanizing for Structural Steel". Bolts $\frac{7}{8}$ in. diameter, holes $\frac{15}{16}$ in. diameter, unless otherwise noted.
5. Reinforcement bars designated (E) shall be epoxy coated.
6. Slipforming of parapets shall not be allowed.
7. Bearing seat surfaces shall be constructed or adjusted to the designated elevations within a tolerance of $\frac{1}{8}$ in. (0.01 ft.). Adjustment shall be made either by grinding the surface or by shimming the bearings.
8. Concrete Sealer shall be applied to the exposed surfaces of new concrete on widened sections of piers. The Concrete Sealer shall be a "film forming" type for horizontal surfaces.
9. The embankment configuration with 60 ft. berm shown shall be the minimum that must be placed and compacted prior to construction of the abutments.
10. Plan dimensions and details relative to the existing structure have been taken from existing plans are subject to nominal construction variations. The Contractor shall field verify existing dimensions and details affecting new construction and make necessary approved adjustments prior to construction or ordering of materials. Such variations shall not be cause for additional compensation for a change in scope of the work, however, the Contractor will be paid for the quantity actually furnished at the unit price bid for the work.
11. The existing bearings contain lead plates. The Contractor shall take precautions to deal with the presence of lead on this project.
12. It shall be the Contractor's responsibility to verify the location of all utilities in the field prior to construction activities and to ensure that construction activities do not have detrimental effects on adjacent utilities and other facilities. Any damage to existing utilities and/or facilities caused by the Contractor in the performance of his or her work shall be repaired by the Contractor, to the satisfaction of the Engineer, and no cost to the Department.
13. Bicycle Railing, Curved and Parapet Railing shall be galvanized.

TOTAL BILL OF MATERIAL

ITEM	UNIT	SUPER	SUB	TOTAL
Removal of Existing Superstructures	EACH	1	-	1
Concrete Removal	CU YD	-	45.8	45.8
Slope Wall Removal	SQ YD	-	461	461
Protective Shield	SQ YD	659	-	659
Structure Excavation	CU YD	-	442.3	442.3
Concrete Structures	CU YD	-	204.5	204.5
Concrete Superstructure	CU YD	395.8	-	395.8
Bridge Deck Grooving	SQ YD	1,014	-	1,014
Protective Coat	SQ YD	-	2,014	2,014
Concrete Superstructure (Approach Slab)	CU YD	142.2	-	142.2
Furnishing and Erecting Structural Steel	LSUM	1	-	1
Stud Shear Connectors	EACH	8,757	-	8,757
Reinforcement Bars, Epoxy Coated	POUND	157,090	27,540	184,630
Mechanical Splicers	EACH	-	6	6
Bicycle Railing, Curved	FOOT	568	-	568
Parapet Railing	FOOT	560	-	560
Slope Wall 4"	SQ YD	-	645	645
Furnishing Metal Shell Piles 14" X 0.250"	FOOT	-	595	595
Driving Piles	FOOT	-	595	595
Test Pile Metal Shells	EACH	-	5	5
Pile Shoes	EACH	-	24	24
Name Plates	EACH	1	-	1
Elastomeric Bearing Assembly, Type I	EACH	28	-	28
Anchor Bolts, 1"	EACH	70	-	70
Temporary Sheet Piling	SQ FT	-	5,134	5,134
Structural Repair of Concrete (Depth Equal to or Less than 5")	SQ FT	-	38	38
Granular Backfill for Structures	CU YD	-	192	192
Concrete Sealer	SQ FT	-	830	830
Epoxy Crack Injection	FOOT	-	6	6
Geocomposite Wall Drain	SQ YD	-	120	120
Pipe Underdrains for Structures 4"	FOOT	-	152	152
Protective Shield Removal	LSUM	1	-	1
Bar Terminators	EACH	288	-	288
Drainage Scuppers, DS-12	EACH	4	-	4

INDEX OF SHEETS

1. General Plan and Elevation
2. General Data
3. Substructure Layout
4-8. Top of Slab Elevations
9. South Approach Slab Elevations
10. North Approach Slab Elevations
11. Superstructure Plan and Cross Section
12. Superstructure Details
13. Diaphragm Details
14. Approach Slab Plan and Cross Section
15. Approach Slab Details
16-17. Railing Details
18. Drainage Scuppers, DS-12
19. Framing Plan
20-21. Structural Steel Details
22. Bearing Details
23. South Abutment Removal and Repair Details
24. North Abutment Removal and Repair Details
25. South Abutment
26. North Abutment
27. Abutment Details
28. Pier Removal and Repair Details
29. Piers 1 and 3
30. Pier 2
31. Pier Details
32. Bar Splicer Assembly and Mechanical Splicer Details
33. Metal Shell Pile Details
34-36. Soil Boring Logs

LIST OF ABBREVIATIONS

abut.	Abutment	B.F.	Back Face
℄	Baseline	b/w	Between
℄	Centerline	brg.	Bearing
const.	Construction	cl.	Clearance
cts.	Centers	conc.	Concrete
E.F.	Each Face	∅	Diameter
exist.	Existing	elev.	Elevation
I.F.	Inside Face	F.F.	Front Face
long.	Longitudinal	jt.	Joint
min.	Minimum	max.	Maximum
o.c.	On Center	no.	Number
PG	Profile Grade	O.F.	Outside Face
PJF	Preformed Joint Filler	ℙ	Plate
req'd	Required	prop.	Proposed
sect.	Section	rte.	Route
spec.	Specification	spa.	Spaces
std.	Standard	sta.	Station
typ.	Typical	struct.	Structure

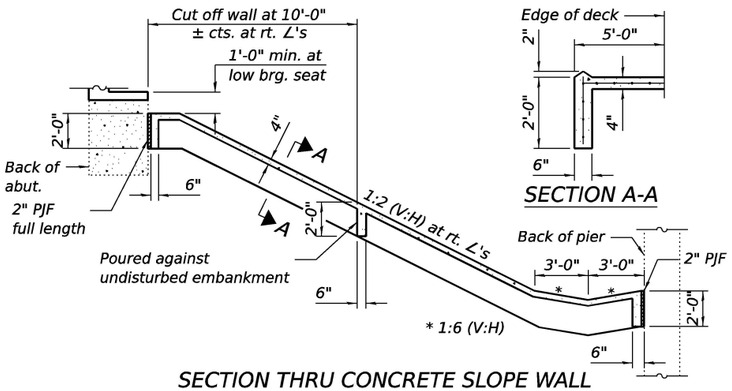

SECTION THRU CONCRETE SLOPE WALL

Note:
Slope wall shall be reinforced with welded wire fabric, 6 in. x 6 in. — W4.0 x W4.0, weighing 58 lbs. per 100 sq. ft.

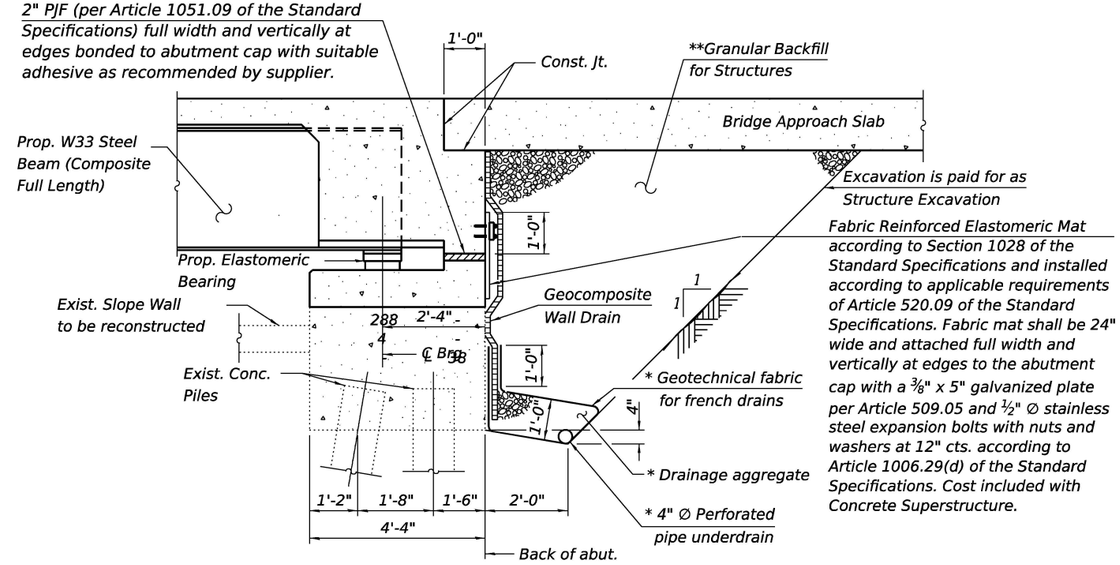

SECTION THRU SEMI-INTEGRAL ABUTMENT

(Existing section shown, proposed widened section similar)
(Horizontal dimensions at rt. ∠'s)

* Included in the cost of Pipe Underdrains for Structures.
** Granular Backfill for Structures shall follow Standard Specification 586 except the coarse aggregate shall be grade CA 7, CA 11, or CA 14.

Notes:
All drainage system components shall extend to 2'-0" from the end of each wingwall except an outlet pipe shall extend until intersecting with the side slopes. The pipes shall drain into concrete headwalls. (See Article 601.05 of the Standard Specifications and Highway Standard 601101).

MODEL: General Data[Sheet]
FILE NAME: c:\pw\working\tpitmeral\pwprod\kludzia\dms617551\D162W20-General Data.dgn

Ardmore Roderick

USER NAME = kingaludzia	DESIGNED - KL	REVISED -	
	DRAWN - KL	REVISED -	
	CHECKED - STB	REVISED -	
PLOT DATE = 5/6/2026	DATE - 5/6/2026	REVISED -	

STATE OF ILLINOIS
DEPARTMENT OF TRANSPORTATION

GENERAL DATA
STRUCTURE NO. 016-0927
SHEET S-2 OF S-36 SHEETS

F.A.I RTE.	SECTION	COUNTY	TOTAL SHEETS	SHEET NO.
80	FAI 80 23 Bridge Repacement 2	COOK	158	77
		CONTRACT NO. 62W20		
		ILLINOIS	FED. AID PROJECT	

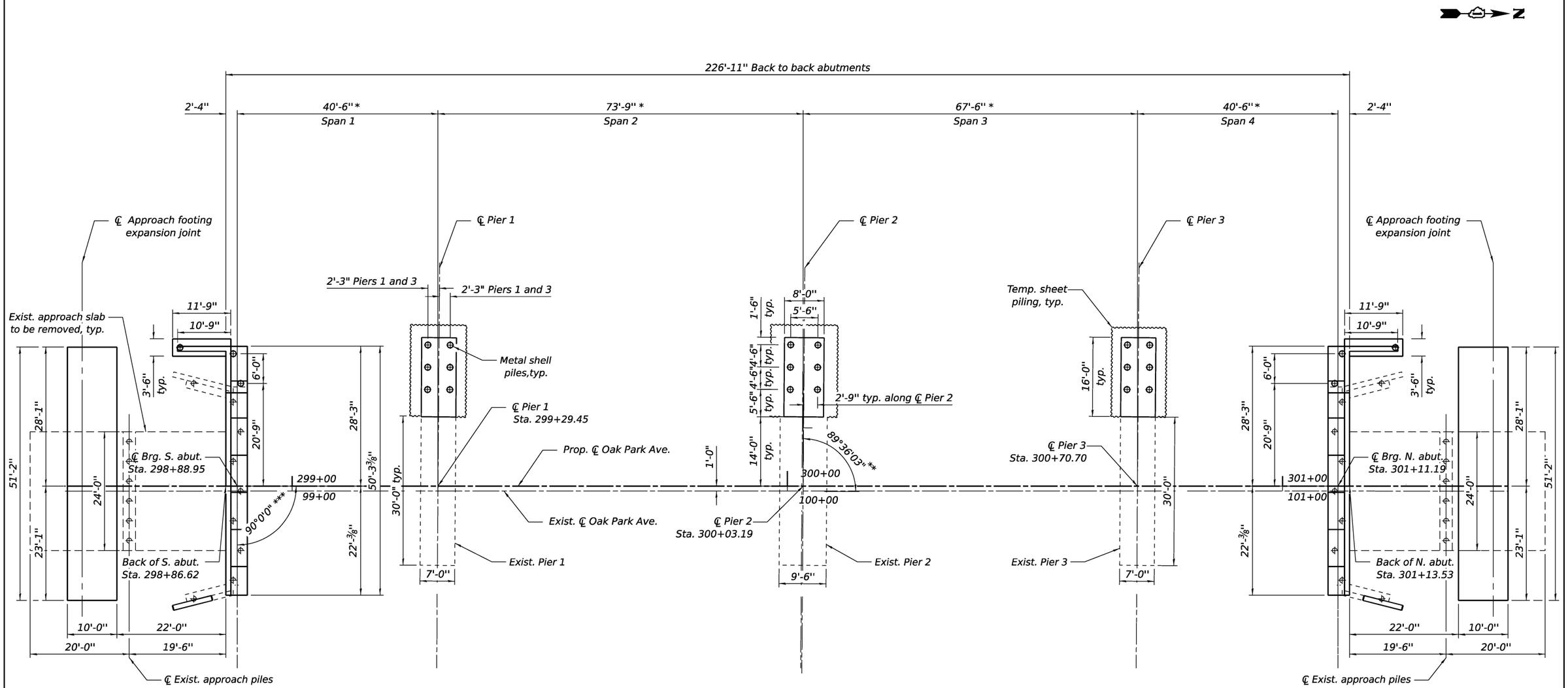

LEGEND

- Exist. Concrete Pile
- Prop. Metal Shell Pile

SUBSTRUCTURE LAYOUT

* Span lengths measured from intersection of pier centerline and existing centerline of Oak Park Avenue
** Typical at piers
*** Typical at abutments

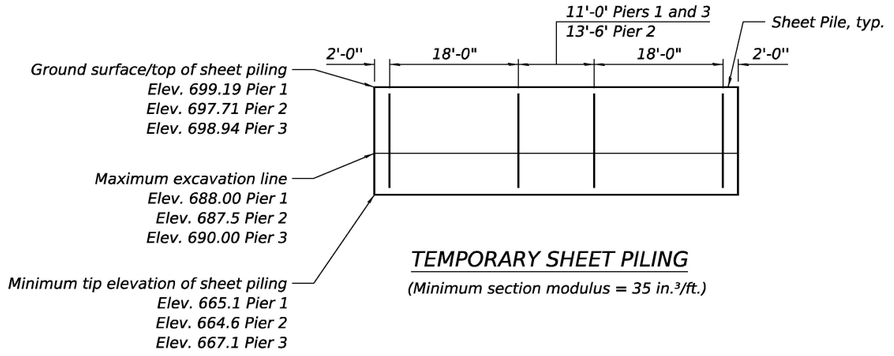

TEMPORARY SHEET PILING

(Minimum section modulus = 35 in.³/ft.)

Notes:
Dimensions are measured perpendicular to proposed ℄ Oak Park Ave.
Remove existing slope walls in accordance with Standard Specifications.
See sheets S-23 and S-24 of S-36 for removal limits of existing abutments.
See sheets S-25, S-26, and S-27 of S-36 for abutment widening details.
See sheets S-28 through S-31 of S-36 for removal limits of existing piers and pier widening details.
If the Contractor chooses to alter the temporary cantilevered sheet piling design requirements shown on the plans, a design submittal including plan details and calculations will be required for review and acceptance by the Engineer.

MODEL: Substructure Layout [Sheet]
FILE NAME: c:\pwworking\primeral\pwprod\kludzia\dms61751\D162W20-Substructure Layout.dgn

Ardmore Roderick

USER NAME = kingaludzia	DESIGNED - NMB	REVISED -	
	DRAWN - MS	REVISED -	
	CHECKED - STB	REVISED -	
PLOT DATE = 5/6/2026	DATE - 5/6/2026	REVISED -	

STATE OF ILLINOIS
DEPARTMENT OF TRANSPORTATION

SUBTSRUCTURE LAYOUT
STRUCTURE NO. 016-0927
SHEET S-3 OF S-36 SHEETS

F.A.I RTE.	SECTION	COUNTY	TOTAL SHEETS	SHEET NO.
80	FAI 80 23 Bridge Replacement 2	COOK	158	78
		CONTRACT NO. 62W20		
		ILLINOIS	FED. AID PROJECT	

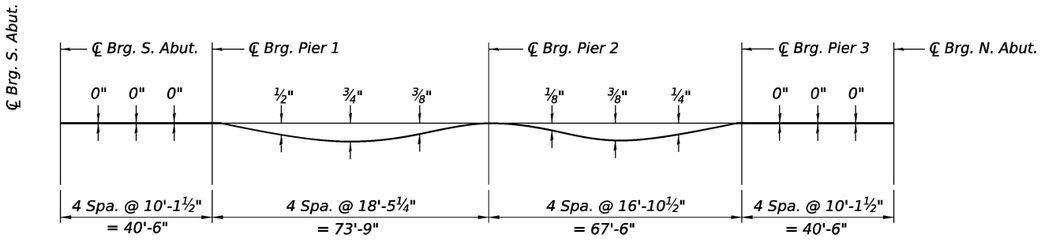

DEAD LOAD DEFLECTION DIAGRAM

(Includes weight of concrete only.)

Note:
The above deflections are not to be used in the field if the engineer is working from the grade elevations adjusted for dead load deflections as shown on sheets S-5 through S-8 of S-36.

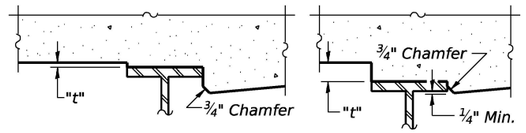

At Minimum Fillet

At Maximum Fillet

To determine "t": After all structural steel has been erected, elevations of the top flanges of the beams shall be taken at intervals shown on sheets S-5 through S-8 of S-36. These elevations subtracted from the "Theoretical Grade Elevations Adjusted for Dead Load Deflection" shown below, minus slab thickness, equals the fillet heights "t" above top flange of beams.

FILLET HEIGHTS

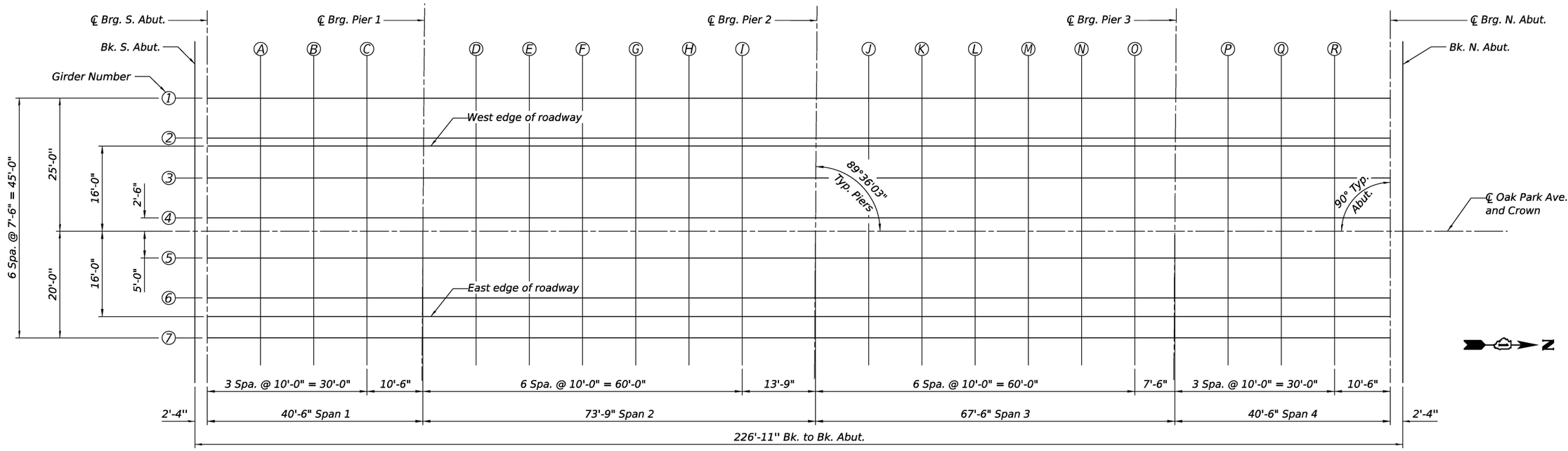

PLAN

MODEL: Top of Slab Elevations Layout I [Sheet]
FILE NAME: c:\pwworking\primera\pwprod\kludzia\dms61751\D162W20-Top of Slab Elevations I.dgn

Ardmore Roderick	USER NAME = nickbrustin	DESIGNED - NMB	REVISED -	STATE OF ILLINOIS DEPARTMENT OF TRANSPORTATION	TOP OF SLAB ELEVATIONS I STRUCTURE NO. 016-0927	F.A.I RTE. 80	SECTION FAI 80 23 Bridge Replacement 2	COUNTY COOK	TOTAL SHEETS 158 / SHEET NO. 79
		DRAWN - NMB	REVISED -					CONTRACT NO. 62W20	
		CHECKED - STB	REVISED -						
	PLOT DATE = 5/6/2026	DATE - 5/6/2026	REVISED -		SHEET S-4 OF S-36 SHEETS		ILLINOIS	FED. AID PROJECT	

GIRDER 1

LOCATION	STATION	OFFSET	THEORETICAL GRADE ELEVATIONS	THEORETICAL GRADE ELEVATIONS ADJUSTED FOR DEAD LOAD DEFLECTION
Bk. S. Abut.	298+86.62	-25.00	718.99	718.99
℄ Brg. S. Abut.	298+88.95	-25.00	719.03	719.03
A	298+98.95	-25.00	719.21	719.21
B	299+08.95	-25.00	719.37	719.37
C	299+18.95	-25.00	719.52	719.52
℄ Brg. Pier 1	299+29.62	-25.00	719.66	719.66
D	299+39.62	-25.00	719.77	719.79
E	299+49.62	-25.00	719.86	719.91
F	299+59.62	-25.00	719.94	720.00
G	299+69.62	-25.00	720.00	720.06
H	299+79.62	-25.00	720.05	720.09
I	299+89.62	-25.00	720.07	720.10
℄ Brg. Pier 2	300+03.36	-25.00	720.08	720.08
J	300+13.36	-25.00	720.07	720.07
K	300+23.36	-25.00	720.03	720.05
L	300+33.36	-25.00	719.99	720.01
M	300+43.36	-25.00	719.92	719.95
N	300+53.36	-25.00	719.84	719.86
O	300+63.36	-25.00	719.74	719.75
℄ Brg. Pier 3	300+70.87	-25.00	719.65	719.65
P	300+80.87	-25.00	719.52	719.51
Q	300+90.87	-25.00	719.38	719.38
R	301+00.87	-25.00	719.21	719.20
℄ Brg. N. Abut.	301+11.19	-25.00	719.03	719.03
Bk. N. Abut.	301+13.53	-25.00	718.98	718.98

GIRDER 2

LOCATION	STATION	OFFSET	THEORETICAL GRADE ELEVATIONS	THEORETICAL GRADE ELEVATIONS ADJUSTED FOR DEAD LOAD DEFLECTION
Bk. S. Abut.	298+86.62	-17.50	719.11	719.11
℄ Brg. S. Abut.	298+88.95	-17.50	719.16	719.16
A	298+98.95	-17.50	719.34	719.34
B	299+08.95	-17.50	719.50	719.50
C	299+18.95	-17.50	719.65	719.64
℄ Brg. Pier 1	299+29.57	-17.50	719.78	719.78
D	299+39.57	-17.50	719.89	719.92
E	299+49.57	-17.50	719.99	720.03
F	299+59.57	-17.50	720.07	720.13
G	299+69.57	-17.50	720.13	720.19
H	299+79.57	-17.50	720.17	720.22
I	299+89.57	-17.50	720.20	720.22
℄ Brg. Pier 2	300+03.31	-17.50	720.20	720.20
J	300+13.31	-17.50	720.19	720.20
K	300+23.31	-17.50	720.16	720.18
L	300+33.31	-17.50	720.11	720.14
M	300+43.31	-17.50	720.05	720.08
N	300+53.31	-17.50	719.96	719.99
O	300+63.31	-17.50	719.86	719.87
℄ Brg. Pier 3	300+70.82	-17.50	719.78	719.78
P	300+80.82	-17.50	719.65	719.64
Q	300+90.82	-17.50	719.50	719.50
R	301+00.82	-17.50	719.34	719.32
℄ Brg. N. Abut.	301+11.19	-17.50	719.15	719.15
Bk. N. Abut.	301+13.53	-17.50	719.13	719.13

WEST EDGE OF ROADWAY

LOCATION	STATION	OFFSET	THEORETICAL GRADE ELEVATIONS	THEORETICAL GRADE ELEVATIONS ADJUSTED FOR DEAD LOAD DEFLECTION
Bk. S. Abut.	298+86.62	-16.00	719.14	719.14
℄ Brg. S. Abut.	298+88.95	-16.00	719.18	719.18
A	298+98.95	-16.00	719.36	719.36
B	299+08.95	-16.00	719.52	719.52
C	299+18.95	-16.00	719.67	719.67
℄ Brg. Pier 1	299+29.56	-16.00	719.81	719.81
D	299+39.56	-16.00	719.92	719.94
E	299+49.56	-16.00	720.01	720.06
F	299+59.56	-16.00	720.09	720.15
G	299+69.56	-16.00	720.15	720.21
H	299+79.56	-16.00	720.20	720.24
I	299+89.56	-16.00	720.22	720.25
℄ Brg. Pier 2	300+03.30	-16.00	720.23	720.23
J	300+13.30	-16.00	720.22	720.22
K	300+23.30	-16.00	720.18	720.20
L	300+33.30	-16.00	720.14	720.16
M	300+43.30	-16.00	720.07	720.10
N	300+53.30	-16.00	719.99	720.01
O	300+63.30	-16.00	719.89	719.90
℄ Brg. Pier 3	300+70.81	-16.00	719.80	719.80
P	300+80.81	-16.00	719.67	719.66
Q	300+90.81	-16.00	719.53	719.53
R	301+00.81	-16.00	719.36	719.35
℄ Brg. N. Abut.	301+11.19	-16.00	719.18	719.18
Bk. N. Abut.	301+13.53	-16.00	719.13	719.13

MODEL: Top of Slab Elevations Layout II [Sheet]
FILE NAME: c:\pwworking\primeral\pwprod\kludzia\dms61751\D162W20-Top of Slab Elevations II.dgn

Ardmore Roderick

USER NAME = nickbrustin	DESIGNED - NMB	REVISED -	
	DRAWN - NMB	REVISED -	
	CHECKED - STB	REVISED -	
PLOT DATE = 5/6/2026	DATE - 5/6/2026	REVISED -	

STATE OF ILLINOIS
DEPARTMENT OF TRANSPORTATION

TOP OF SLAB ELEVATIONS II
STRUCTURE NO. 016-0927
SHEET S-5 OF S-36 SHEETS

F.A.I RTE.	SECTION	COUNTY	TOTAL SHEETS	SHEET NO.
80	FAI 80 23 Bridge Replacement 2	COOK	158	80
		CONTRACT NO. 62W20		
	ILLINOIS FED. AID PROJECT			

GIRDER 3

LOCATION	STATION	OFFSET	THEORETICAL GRADE ELEVATIONS	THEORETICAL GRADE ELEVATIONS ADJUSTED FOR DEAD LOAD DEFLECTION
Bk. S. Abut.	298+86.62	-10.00	719.25	719.25
℄ Brg. S. Abut.	298+88.95	-10.00	719.29	719.29
A	298+98.95	-10.00	719.47	719.47
B	299+08.95	-10.00	719.63	719.63
C	299+18.95	-10.00	719.78	719.78
℄ Brg. Pier 1	299+29.52	-10.00	719.92	719.92
D	299+39.52	-10.00	720.03	720.05
E	299+49.52	-10.00	720.12	720.17
F	299+59.52	-10.00	720.20	720.26
G	299+69.52	-10.00	720.26	720.32
H	299+79.52	-10.00	720.31	720.35
I	299+89.52	-10.00	720.33	720.36
℄ Brg. Pier 2	300+03.26	-10.00	720.34	720.34
J	300+13.26	-10.00	720.33	720.33
K	300+23.26	-10.00	720.29	720.31
L	300+33.26	-10.00	720.25	720.27
M	300+43.26	-10.00	720.18	720.21
N	300+53.26	-10.00	720.10	720.12
O	300+63.26	-10.00	720.00	720.01
℄ Brg. Pier 3	300+70.77	-10.00	719.91	719.91
P	300+80.77	-10.00	719.78	719.78
Q	300+90.77	-10.00	719.64	719.64
R	301+00.77	-10.00	719.47	719.46
℄ Brg. N. Abut.	301+11.19	-10.00	719.29	719.29
Bk. N. Abut.	301+13.53	-10.00	719.24	719.24

GIRDER 4

LOCATION	STATION	OFFSET	THEORETICAL GRADE ELEVATIONS	THEORETICAL GRADE ELEVATIONS ADJUSTED FOR DEAD LOAD DEFLECTION
Bk. S. Abut.	298+86.62	-2.50	719.36	719.36
℄ Brg. S. Abut.	298+88.95	-2.50	719.40	719.40
A	298+98.95	-2.50	719.58	719.58
B	299+08.95	-2.50	719.75	719.75
C	299+18.95	-2.50	719.89	719.89
℄ Brg. Pier 1	299+29.47	-2.50	720.03	720.03
D	299+39.47	-2.50	720.14	720.16
E	299+49.47	-2.50	720.24	720.28
F	299+59.47	-2.50	720.31	720.37
G	299+69.47	-2.50	720.37	720.43
H	299+79.47	-2.50	720.42	720.46
I	299+89.47	-2.50	720.44	720.47
℄ Brg. Pier 2	300+03.21	-2.50	720.45	720.45
J	300+13.21	-2.50	720.44	720.44
K	300+23.21	-2.50	720.41	720.42
L	300+33.21	-2.50	720.36	720.39
M	300+43.21	-2.50	720.29	720.32
N	300+53.21	-2.50	720.21	720.23
O	300+63.21	-2.50	720.11	720.12
℄ Brg. Pier 3	300+70.72	-2.50	720.03	720.03
P	300+80.72	-2.50	719.90	719.89
Q	300+90.72	-2.50	719.75	719.75
R	301+00.72	-2.50	719.59	719.57
℄ Brg. N. Abut.	301+11.19	-2.50	719.40	719.40
Bk. N. Abut.	301+13.53	-2.50	719.35	719.35

℄ OAK PARK AVE AND CROWN

LOCATION	STATION	OFFSET	THEORETICAL GRADE ELEVATIONS	THEORETICAL GRADE ELEVATIONS ADJUSTED FOR DEAD LOAD DEFLECTION
Bk. S. Abut.	298+86.62	0.00	719.40	719.40
℄ Brg. S. Abut.	298+88.95	0.00	719.44	719.44
A	298+98.95	0.00	719.62	719.62
B	299+08.95	0.00	719.78	719.78
C	299+18.95	0.00	719.93	719.93
℄ Brg. Pier 1	299+29.45	0.00	720.07	720.07
D	299+39.45	0.00	720.18	720.20
E	299+49.45	0.00	720.27	720.32
F	299+59.45	0.00	720.35	720.41
G	299+69.45	0.00	720.41	720.47
H	299+79.45	0.00	720.46	720.50
I	299+89.45	0.00	720.48	720.51
℄ Brg. Pier 2	300+03.19	0.00	720.49	720.49
J	300+13.19	0.00	720.48	720.48
K	300+23.19	0.00	720.45	720.46
L	300+33.19	0.00	720.40	720.42
M	300+43.19	0.00	720.33	720.36
N	300+53.19	0.00	720.25	720.27
O	300+63.19	0.00	720.15	720.16
℄ Brg. Pier 3	300+70.70	0.00	720.06	720.06
P	300+80.70	0.00	719.94	719.93
Q	300+90.70	0.00	719.79	719.79
R	301+00.70	0.00	719.63	719.61
℄ Brg. N. Abut.	301+11.19	0.00	719.44	719.44
Bk. N. Abut.	301+13.53	0.00	719.39	719.39

MODEL: Top of Slab Elevations Layout III [Sheet]
FILE NAME: c:\pwworking\primeral\pwprod\kludzia\d1ms61751\D1621W20-Top of Slab Elevations III.dgn

Ardmore Roderick

USER NAME = kingaludzia	DESIGNED - NMB	REVISED -	
	DRAWN - NMB	REVISED -	
	CHECKED - STB	REVISED -	
PLOT DATE = 5/6/2026	DATE - 5/6/2026	REVISED -	

STATE OF ILLINOIS
DEPARTMENT OF TRANSPORTATION

TOP OF SLAB ELEVATIONS III
STRUCTURE NO. 016-0927
SHEET S-6 OF S-36 SHEETS

F.A.I RTE.	SECTION	COUNTY	TOTAL SHEETS	SHEET NO.
80	FAI 80 23 Bridge Replacement 2	COOK	158	81
		CONTRACT NO. 62W20		
	ILLINOIS FED. AID PROJECT			

GIRDER 5

LOCATION	STATION	OFFSET	THEORETICAL GRADE ELEVATIONS	THEORETICAL GRADE ELEVATIONS ADJUSTED FOR DEAD LOAD DEFLECTION
Bk. S. Abut.	298+86.62	5.00	719.32	719.32
℄ Brg. S. Abut.	298+88.95	5.00	719.37	719.37
A	298+98.95	5.00	719.55	719.55
B	299+08.95	5.00	719.71	719.71
C	299+18.95	5.00	719.86	719.85
℄ Brg. Pier 1	299+29.41	5.00	719.99	719.99
D	299+39.41	5.00	720.10	720.12
E	299+49.41	5.00	720.20	720.24
F	299+59.41	5.00	720.28	720.33
G	299+69.41	5.00	720.34	720.40
H	299+79.41	5.00	720.38	720.43
I	299+89.41	5.00	720.41	720.43
℄ Brg. Pier 2	300+03.16	5.00	720.42	720.42
J	300+13.16	5.00	720.40	720.41
K	300+23.16	5.00	720.37	720.39
L	300+33.16	5.00	720.32	720.35
M	300+43.16	5.00	720.26	720.29
N	300+53.16	5.00	720.17	720.20
O	300+63.16	5.00	720.08	720.08
℄ Brg. Pier 3	300+70.67	5.00	719.99	719.99
P	300+80.67	5.00	719.86	719.85
Q	300+90.67	5.00	719.71	719.72
R	301+00.67	5.00	719.55	719.54
℄ Brg. N. Abut.	301+11.19	5.00	719.36	719.36
Bk. N. Abut.	301+13.53	5.00	719.32	719.32

GIRDER 6

LOCATION	STATION	OFFSET	THEORETICAL GRADE ELEVATIONS	THEORETICAL GRADE ELEVATIONS ADJUSTED FOR DEAD LOAD DEFLECTION
Bk. S. Abut.	298+86.62	12.50	719.21	719.21
℄ Brg. S. Abut.	298+88.95	12.50	719.25	719.25
A	298+98.95	12.50	719.43	719.43
B	299+08.95	12.50	719.59	719.59
C	299+18.95	12.50	719.74	719.74
℄ Brg. Pier 1	299+29.36	12.50	719.88	719.88
D	299+39.36	12.50	719.99	720.01
E	299+49.36	12.50	720.08	720.13
F	299+59.36	12.50	720.16	720.22
G	299+69.36	12.50	720.22	720.28
H	299+79.36	12.50	720.26	720.31
I	299+89.36	12.50	720.29	720.32
℄ Brg. Pier 2	300+03.10	12.50	720.30	720.30
J	300+13.10	12.50	720.29	720.29
K	300+23.10	12.50	720.26	720.27
L	300+33.10	12.50	720.21	720.23
M	300+43.10	12.50	720.14	720.17
N	300+53.10	12.50	720.06	720.08
O	300+63.10	12.50	719.96	719.97
℄ Brg. Pier 3	300+70.61	12.50	719.88	719.88
P	300+80.61	12.50	719.75	719.74
Q	300+90.61	12.50	719.60	719.60
R	301+00.61	12.50	719.44	719.42
℄ Brg. N. Abut.	301+11.19	12.50	719.25	719.25
Bk. N. Abut.	301+13.53	12.50	719.20	719.20

MODEL: Top of Slab Elevations Layout IV [Sheet]
FILE NAME: c:\pwworking\primeral\pwprod\kludzia\dms617511D162W20-Top of Slab Elevations IV.dgn

Ardmore Roderick

USER NAME = nickbrustin	DESIGNED - NMB	REVISED -	
	DRAWN - NMB	REVISED -	
	CHECKED - STB	REVISED -	
PLOT DATE = 5/6/2026	DATE - 5/6/2026	REVISED -	

STATE OF ILLINOIS
DEPARTMENT OF TRANSPORTATION

TOP OF SLAB ELEVATIONS IV
STRUCTURE NO. 016-0927

SHEET S-7 OF S-36 SHEETS

F.A.I RTE.	SECTION	COUNTY	TOTAL SHEETS	SHEET NO.
80	FAI 80 23 Bridge Replacement 2	COOK	158	82
		CONTRACT NO. 62W20		
	ILLINOIS FED. AID PROJECT			

EAST EDGE OF ROADWAY

LOCATION	STATION	OFFSET	THEORETICAL GRADE ELEVATIONS	THEORETICAL GRADE ELEVATIONS ADJUSTED FOR DEAD LOAD DEFLECTION
Bk. S. Abut.	298+86.62	16.00	719.14	719.14
℄ Brg. S. Abut.	298+88.95	16.00	719.18	719.18
A	298+98.95	16.00	719.36	719.36
B	299+08.95	16.00	719.52	719.52
C	299+18.95	16.00	719.67	719.67
℄ Brg. Pier 1	299+29.34	16.00	719.81	719.81
D	299+39.34	16.00	719.92	719.94
E	299+49.34	16.00	720.01	720.06
F	299+59.34	16.00	720.09	720.15
G	299+69.34	16.00	720.15	720.21
H	299+79.34	16.00	720.19	720.24
I	299+89.34	16.00	720.22	720.24
℄ Brg. Pier 2	300+03.08	16.00	720.23	720.23
J	300+13.08	16.00	720.22	720.22
K	300+23.08	16.00	720.19	720.20
L	300+33.08	16.00	720.14	720.16
M	300+43.08	16.00	720.07	720.10
N	300+53.08	16.00	719.99	720.01
O	300+63.08	16.00	719.89	719.90
℄ Brg. Pier 3	300+70.59	16.00	719.81	719.81
P	300+80.59	16.00	719.68	719.67
Q	300+90.59	16.00	719.53	719.53
R	301+00.59	16.00	719.37	719.35
℄ Brg. N. Abut.	301+11.19	16.00	719.18	719.18
Bk. N. Abut.	301+13.53	16.00	719.13	719.13

GIRDER 7

LOCATION	STATION	OFFSET	THEORETICAL GRADE ELEVATIONS	THEORETICAL GRADE ELEVATIONS ADJUSTED FOR DEAD LOAD DEFLECTION
Bk. S. Abut.	298+86.62	20.00	719.07	719.07
℄ Brg. S. Abut.	298+88.95	20.00	719.11	719.11
A	298+98.95	20.00	719.29	719.29
B	299+08.95	20.00	719.46	719.46
C	299+18.95	20.00	719.60	719.60
℄ Brg. Pier 1	299+29.31	20.00	719.74	719.74
D	299+39.31	20.00	719.85	719.87
E	299+49.31	20.00	719.95	719.99
F	299+59.31	20.00	720.02	720.08
G	299+69.31	20.00	720.08	720.14
H	299+79.31	20.00	720.13	720.17
I	299+89.31	20.00	720.15	720.18
℄ Brg. Pier 2	300+03.05	20.00	720.16	720.16
J	300+13.05	20.00	720.15	720.15
K	300+23.05	20.00	720.12	720.14
L	300+33.05	20.00	720.07	720.10
M	300+43.05	20.00	720.01	720.04
N	300+53.05	20.00	719.92	719.95
O	300+63.05	20.00	719.83	719.83
℄ Brg. Pier 3	300+70.56	20.00	719.74	719.74
P	300+80.56	20.00	719.61	719.60
Q	300+90.56	20.00	719.46	719.47
R	301+00.56	20.00	719.30	719.29
℄ Brg. N. Abut.	301+11.19	20.00	719.11	719.11
Bk. N. Abut.	301+13.53	20.00	719.07	719.07

MODEL: Top of Slab Elevations Layout V [Sheet]
FILE NAME: c:\pwworking\primeral\pwprod\kludzia\dms617511D162W20-Top of Slab Elevations V.dgn

Ardmore Roderick

USER NAME = nickbrustin	DESIGNED - NMB	REVISED -	
	DRAWN - NMB	REVISED -	
	CHECKED - STB	REVISED -	
PLOT DATE = 5/6/2026	DATE - 5/6/2026	REVISED -	

STATE OF ILLINOIS
DEPARTMENT OF TRANSPORTATION

TOP OF SLAB ELEVATIONS V
STRUCTURE NO. 016-0927
SHEET S-8 OF S-36 SHEETS

F.A.I RTE.	SECTION	COUNTY	TOTAL SHEETS	SHEET NO.
80	FAI 80 23 Bridge Replacement 2	COOK	158	83
		CONTRACT NO. 62W20		
	ILLINOIS FED. AID PROJECT			

WEST EDGE OF APPROACH SLAB

Location	Station	Offset	Theoretical Grade Elevations
S. End S. Appr. Slab	298+57.62	-28.08	718.30
A1	298+67.62	-28.08	718.54
A2	298+77.62	-28.08	718.75
N. End S. Appr. Slab	298+87.62	-28.08	718.95

WEST EDGE OF SHOULDER

Location	Station	Offset	Theoretical Grade Elevations
S. End S. Appr. Slab	298+57.62	-16.00	718.50
A1	298+67.62	-16.00	718.74
A2	298+77.62	-16.00	718.95
N. End S. Appr. Slab	298+87.62	-16.00	719.15

WEST EDGE OF PAVEMENT

Location	Station	Offset	Theoretical Grade Elevations
S. End S. Appr. Slab	298+57.62	-12.00	718.58
A1	298+67.62	-12.00	718.82
A2	298+77.62	-12.00	719.03
N. End S. Appr. Slab	298+87.62	-12.00	719.23

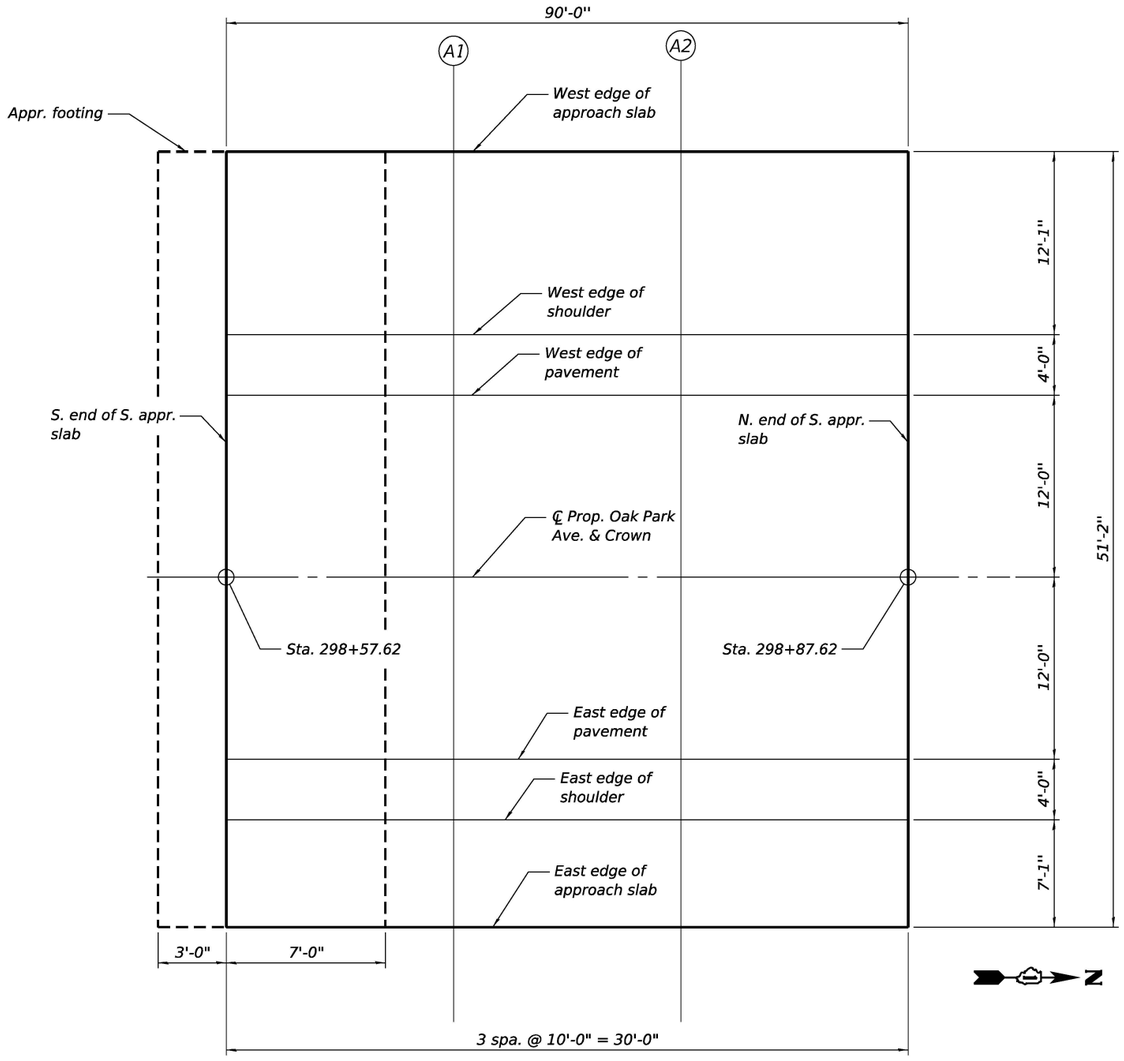

PLAN

℄ OAK PARK AVE AND CROWN

Location	Station	Offset	Theoretical Grade Elevations
S. End S. Appr. Slab	298+57.62	0.00	718.76
A1	298+67.62	0.00	719.00
A2	298+77.62	0.00	719.21
N. End S. Appr. Slab	298+87.62	0.00	719.41

EAST EDGE OF PAVEMENT

Location	Station	Offset	Theoretical Grade Elevations
S. End S. Appr. Slab	298+57.62	12.00	718.58
A1	298+67.62	12.00	718.82
A2	298+77.62	12.00	719.03
N. End S. Appr. Slab	298+87.62	12.00	719.23

EAST EDGE OF SHOULDER

Location	Station	Offset	Theoretical Grade Elevations
S. End S. Appr. Slab	298+57.62	16.00	718.50
A1	298+67.62	16.00	718.74
A2	298+77.62	16.00	718.95
N. End S. Appr. Slab	298+87.62	16.00	719.15

EAST EDGE OF APPROACH SLAB

Location	Station	Offset	Theoretical Grade Elevations
S. End S. Appr. Slab	298+57.62	23.08	718.39
A1	298+67.62	23.08	718.62
A2	298+77.62	23.08	718.84
N. End S. Appr. Slab	298+87.62	23.08	719.04

MODEL: South Approach Slab Elevations [Sheet]
FILE NAME: c:\pwworking\primeral\pwprod\kludaldms61751\D162W20-South Approach Slab Elevations.dgn

Ardmore Roderick

USER NAME = nickbrustin	DESIGNED - NMB	REVISED -
	DRAWN - NMB	REVISED -
	CHECKED - STB	REVISED -
PLOT DATE = 5/6/2026	DATE - 5/6/2026	REVISED -

STATE OF ILLINOIS
DEPARTMENT OF TRANSPORTATION

SOUTH APPROACH SLAB ELEVATIONS
STRUCTURE NO. 016-0927
SHEET S-9 OF S-36 SHEETS

F.A.I RTE.	SECTION	COUNTY	TOTAL SHEETS	SHEET NO.
80	FAI 80 23 Bridge Replacement 2	COOK	158	84
		CONTRACT NO. 62W20		
	ILLINOIS	FED. AID PROJECT		

WEST EDGE OF APPROACH SLAB

Location	Station	Offset	Theoretical Grade Elevations
S. End N. Appr. Slab	301+12.53	-28.08	718.95
A3	301+22.53	-28.08	718.75
A4	301+32.53	-28.08	718.53
N. End N. Appr. Slab	301+42.53	-28.08	718.30

WEST EDGE OF SHOULDER

Location	Station	Offset	Theoretical Grade Elevations
S. End N. Appr. Slab	301+12.53	-16.00	719.15
A3	301+22.53	-16.00	718.95
A4	301+32.53	-16.00	718.73
N. End N. Appr. Slab	301+42.53	-16.00	718.50

WEST EDGE OF PAVEMENT

Location	Station	Offset	Theoretical Grade Elevations
S. End N. Appr. Slab	301+12.53	-12.00	719.23
A3	301+22.53	-12.00	719.03
A4	301+32.53	-12.00	718.81
N. End N. Appr. Slab	301+42.53	-12.00	718.58

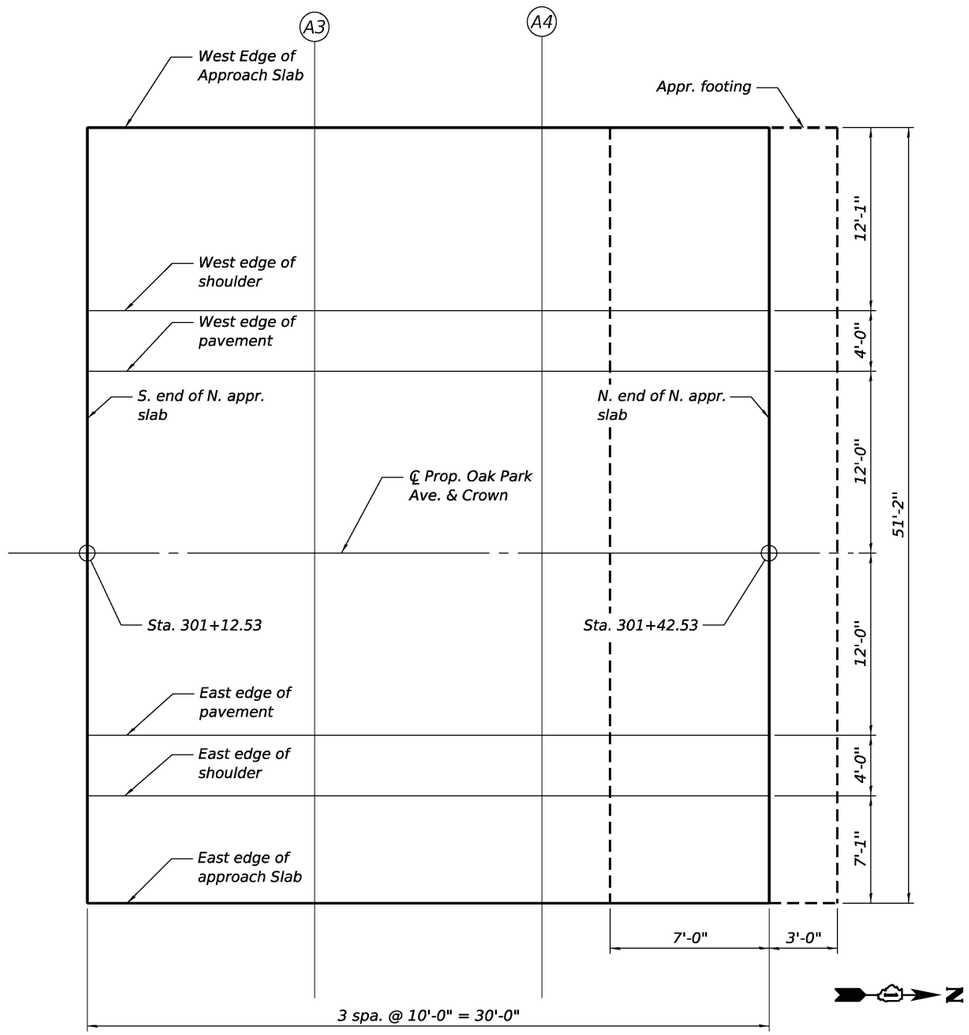

PLAN

℄ OAK PARK AVE AND CROWN

Location	Station	Offset	Theoretical Grade Elevations
S. End N. Appr. Slab	301+12.53	0.00	719.41
A3	301+22.53	0.00	719.21
A4	301+32.53	0.00	718.99
N. End N. Appr. Slab	301+42.53	0.00	718.76

EAST EDGE OF PAVEMENT

Location	Station	Offset	Theoretical Grade Elevations
S. End N. Appr. Slab	301+12.53	12.00	719.23
A3	301+22.53	12.00	719.03
A4	301+32.53	12.00	718.81
N. End N. Appr. Slab	301+42.53	12.00	718.58

EAST EDGE OF SHOULDER

Location	Station	Offset	Theoretical Grade Elevations
S. End N. Appr. Slab	301+12.53	16.00	719.15
A3	301+22.53	16.00	719.95
A4	301+32.53	16.00	718.73
N. End N. Appr. Slab	301+42.53	16.00	718.50

EAST EDGE OF APPROACH SLAB

Location	Station	Offset	Theoretical Grade Elevations
S. End N. Appr. Slab	301+12.53	23.08	719.03
A3	301+22.53	23.08	718.83
A4	301+32.53	23.08	718.61
N. End N. Appr. Slab	301+42.53	23.08	718.38

MODEL: North Approach Slab Elevations [Sheet]
FILE NAME: c:\pwworking\primeral\pwprod\kludaldms61751\D162W20-North Approach Slab Elevations.dgn

Ardmore Roderick

USER NAME = nickbrustin	DESIGNED - NMB	REVISED -
	DRAWN - NMB	REVISED -
	CHECKED - STB	REVISED -
PLOT DATE = 5/6/2026	DATE - 5/6/2026	REVISED -

STATE OF ILLINOIS
DEPARTMENT OF TRANSPORTATION

NORTH APPROACH SLAB ELEVATIONS
STRUCTURE NO. 016-0927
SHEET S-10 OF S-36 SHEETS

F.A.I RTE.	SECTION	COUNTY	TOTAL SHEETS	SHEET NO.
80	FAI 80 23 Bridge Replacement 2	COOK	158	85
		CONTRACT NO. 62W20		
	ILLINOIS FED. AID PROJECT			

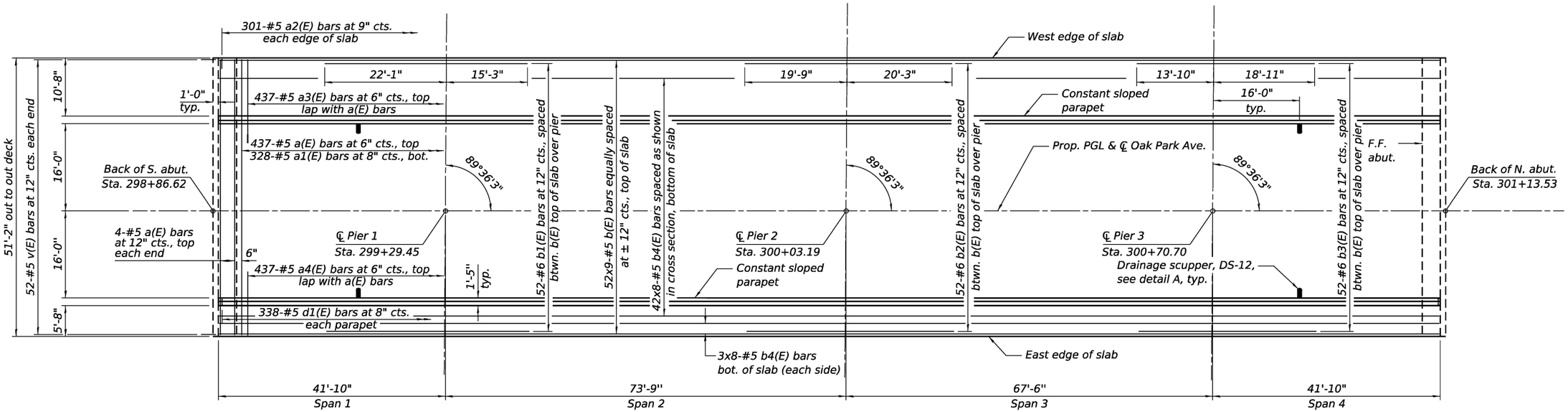

DECK PLAN

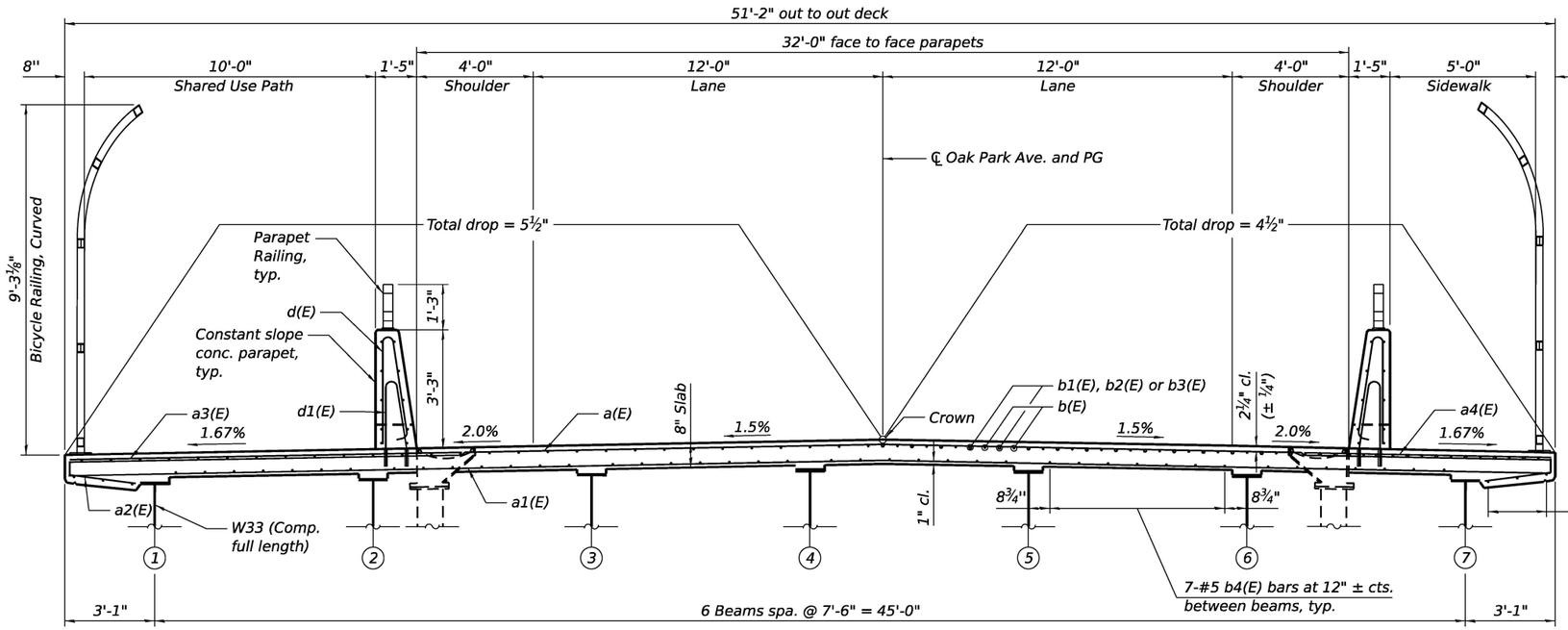

SECTION NEAR MIDSPAN — SECTION NEAR PIER

CROSS SECTION

(Looking North)

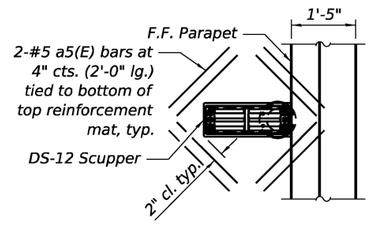

DETAIL A PLAN

Cut longitudinal reinforcement to clear drainage scuppers. (East scuppers and parapets shown near beam 6. West scuppers and parapet similar near beam 2)

MINIMUM BAR LAP

#5 BAR = 3'-10"

Notes:

See sheet S-12 of S-36 for superstructure details and bill of materials.

Bars indicated thus 20x3-#5 etc. indicates 20 lines of bars with 3 lengths per line.

MODEL: Superstructure Plan and XS [Sheet]
FILE NAME: c:\pwworking\primeral\pwprod\kludzia\dms61751\D162W20-Superstructure Plan and Cross Section.dgn

Ardmore Roderick

USER NAME = kingaludzia	DESIGNED - NMB	REVISED -	
	DRAWN - NMB	REVISED -	
	CHECKED - STB	REVISED -	
PLOT DATE = 5/6/2026	DATE - 5/6/2026	REVISED -	

STATE OF ILLINOIS
DEPARTMENT OF TRANSPORTATION

SUPERSTRUCTURE PLAN AND CROSS SECTION
STRUCTURE NO. 016-0927
SHEET S-11 OF S-36 SHEETS

F.A.I RTE.	SECTION	COUNTY	TOTAL SHEETS	SHEET NO.
80	FAI 80 23 Bridge Replacement 2	COOK	158	86
		CONTRACT NO. 62W20		
	ILLINOIS	FED. AID PROJECT		

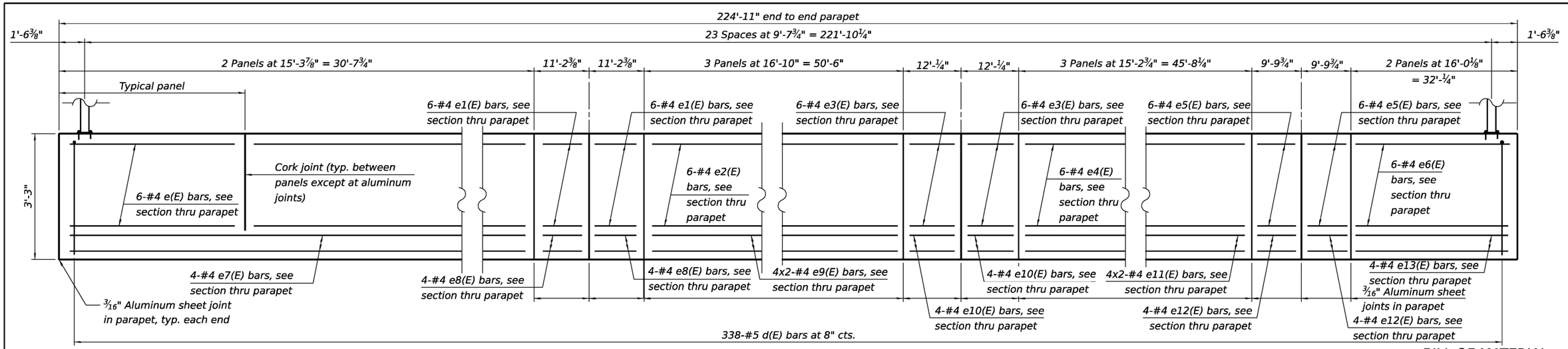

INSIDE ELEVATION OF PARAPET

(West parapet shown, East parapet similar but opposite hand)

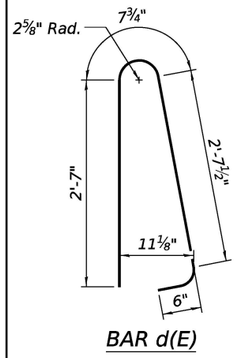

BAR d(E)

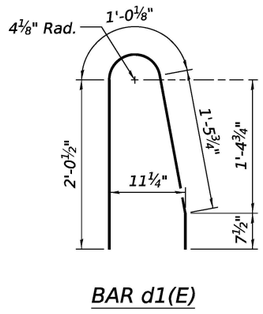

BAR d1(E)

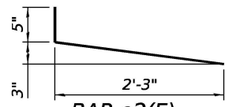

BAR a2(E)

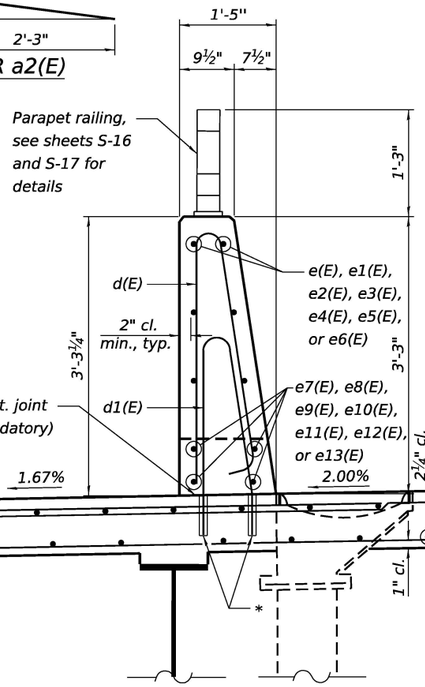

SECTION THRU PARAPET

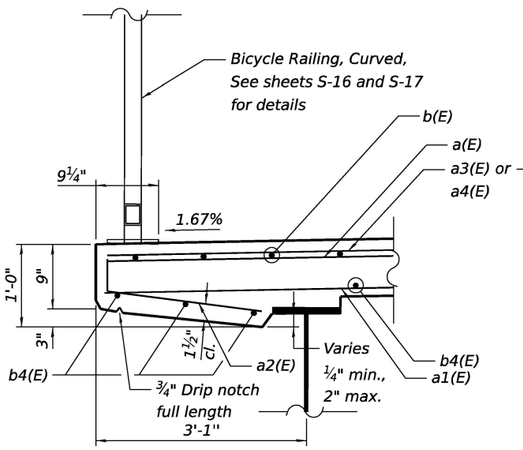

SECTION THRU EDGE OF DECK

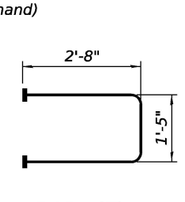

BAR s(E)

(Headed. 184 - #5 bar terminators)

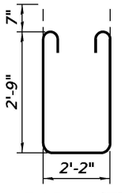

BAR s1(E)



BAR u(E)

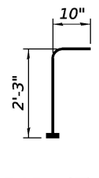

BAR v(E)

(Headed. 104 - #5 bar terminators)

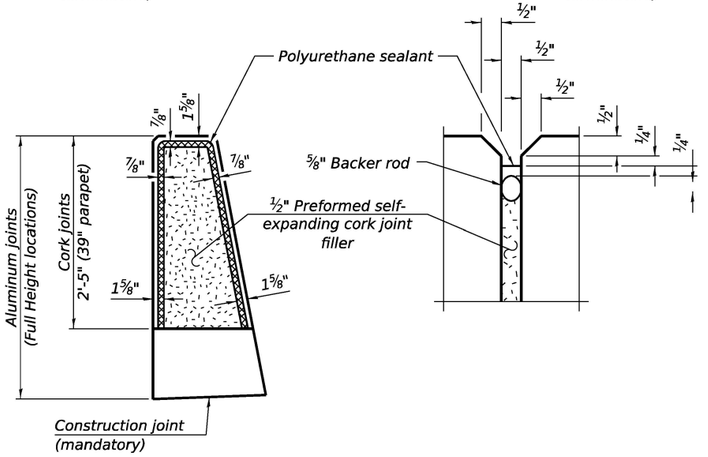

PARAPET JOINT DETAILS

Notes:

Bars indicated thus, 4x5-#4 etc. indicates 4 lines of bars with 5 lengths per line.

The polyurethane sealant shall be according to Article 1050.04 of the Standard Specifications and the color shall be grey.

The 3/16" aluminum sheet shall be ASTM B 209 alloy 3003-H14 and coated to minimize reaction with wet concrete. Cost included with Concrete Superstructure.

Bar terminators, paid for separately. See Total Bill of Material.

MINIMUM BAR LAP

#4 BAR = 2'-2"

BILL OF MATERIAL

Bar	No.	Size	Length	Shape
a(E)	445	#5	50'-10"	
a1(E)	328	#5	50'-10"	
a2(E)	602	#5	2'-3"	
a3(E)	437	#5	15'-6"	
a4(E)	437	#5	10'-6"	
a5(E)	32	#5	2'-0"	
b(E)	468	#5	28'-5"	
b1(E)	52	#6	37'-4"	
b2(E)	52	#6	38'-2"	
b3(E)	52	#6	32'-9"	
b4(E)	384	#5	31'-6"	
d(E)	676	#5	6'-5"	
d1(E)	676	#5	5'-2"	
e(E)	24	#4	15'-0"	
e1(E)	24	#4	10'-10"	
e2(E)	36	#4	16'-6"	
e3(E)	24	#4	11'-8"	
e4(E)	36	#4	14'-11"	
e5(E)	24	#4	9'-6"	
e6(E)	24	#4	15'-8"	
e7(E)	8	#4	30'-4"	
e8(E)	16	#4	10'-10"	
e9(E)	16	#4	26'-2"	
e10(E)	16	#4	11'-8"	
e11(E)	16	#4	23'-9"	
e12(E)	16	#4	9'-6"	
e13(E)	8	#4	31'-8"	
m(E)	8	#6	1'-9"	
m1(E)	24	#6	7'-1"	
m2(E)	12	#6	1'-9"	
m3(E)	36	#6	7'-1"	
m4(E)	8	#6	26'-2"	
m5(E)	8	#6	26'-2"	
m6(E)	20	#4	25'-8"	
s(E)	92	#5	6'-9"	
s1(E)	92	#5	8'-10"	
u(E)	92	#4	3'-8"	
v(E)	104	#5	3'-1"	
Concrete Superstructure			Cu. Yd.	380.4
Reinforcement Bars, Epoxy Coated			Pound	97,690

** Drill and set #5 d1(E) bar according to article 509.06 of the Standard Specifications. Drilled holes shall be roughened or scored per manufacturer's recommendations. Maximum depth of hole shall not exceed 6". Contractor shall take all necessary precautions to prevent drilled hole interface with deck reinforcement bars. Locate drilled holes to miss transverse bars in deck. Locate longitudinal bars to miss drilled locations.*

MODEL: Superstructure Details[Sheet]
FILE NAME: c:\pwworking\primera\pwprod\kludzia\dms61751\D1622W20-Superstructure Details.dgn

Ardmore Roderick

USER NAME = kingaludzia	DESIGNED - NMB	REVISED -	
	DRAWN - NMB	REVISED -	
	CHECKED - STB	REVISED -	
PLOT DATE = 5/6/2026	DATE - 5/6/2026	REVISED -	

STATE OF ILLINOIS
DEPARTMENT OF TRANSPORTATION

SUPERSTRUCTURE DETAILS
STRUCTURE NO. 016-0927
SHEET S-12 OF S-36 SHEETS

F.A.I RTE.	SECTION	COUNTY	TOTAL SHEETS	SHEET NO.
80	FAI 80 23 Bridge Replacement 2	COOK	158	87
		CONTRACT NO. 62W20		
		ILLINOIS	FED. AID PROJECT	

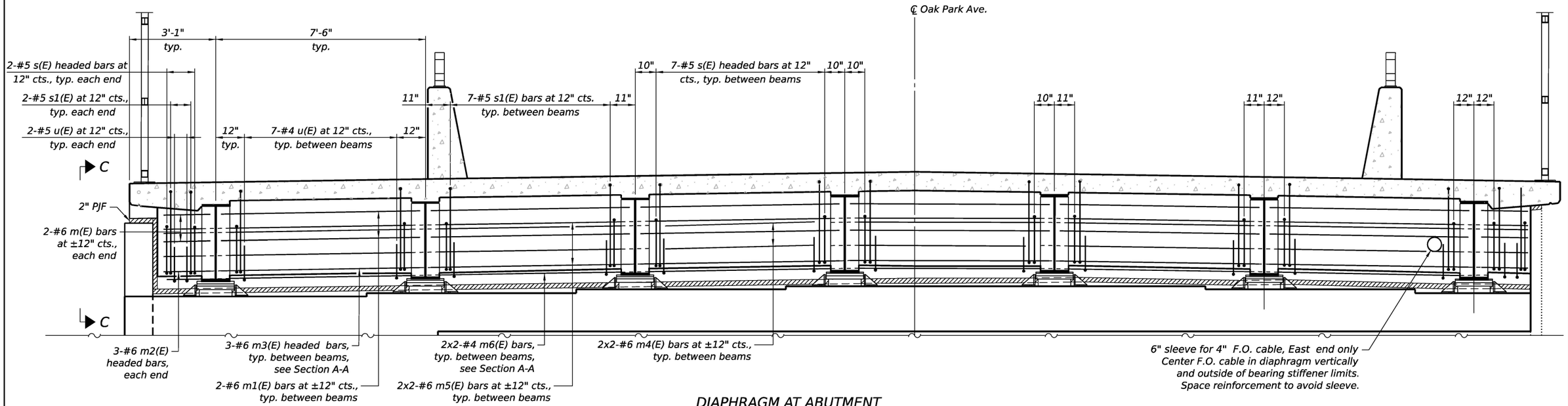

DIAPHRAGM AT ABUTMENT
(Looking North)

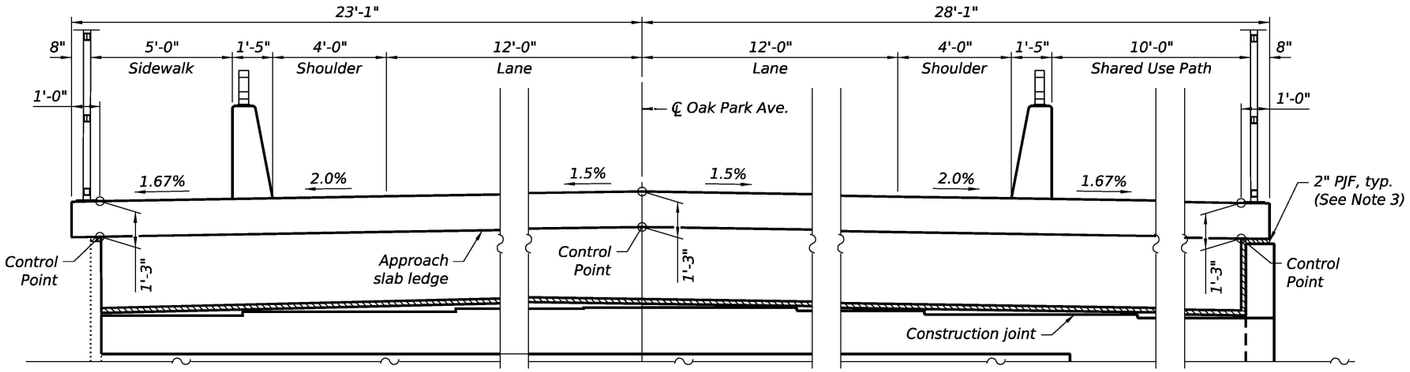

VIEW B-B
(Looking South)

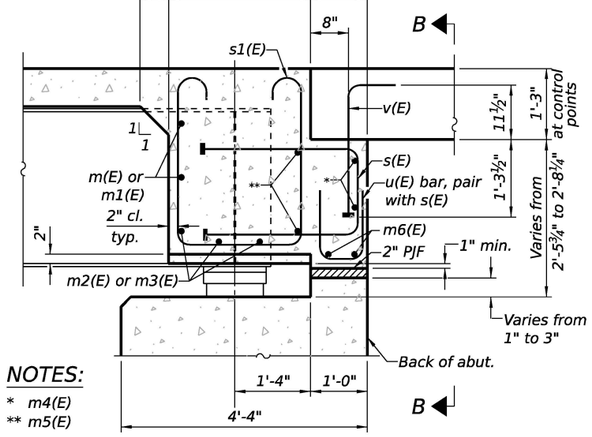

NOTES:
* m4(E)
** m5(E)

SECTION A-A

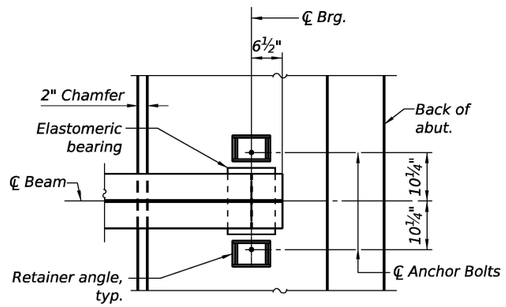

ANCHOR BOLT LAYOUT
(Showing bottom flange of beam)

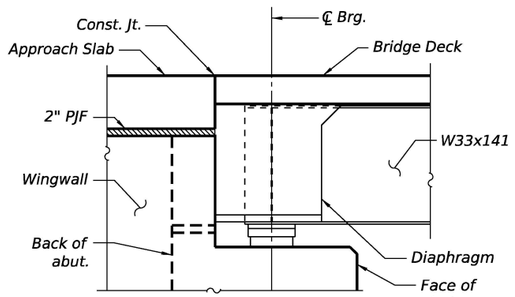

SECTION C-C

MINIMUM BAR LAP
#4 BAR = 2'-2"
#6 BAR = 3'-1"

Notes:
See sheet S-12 of S-36 for superstructure details and bill of material.
The approach slab ledge shall have a constant slope determined from the control points shown.
2" PJF will be bonded to wingwall with suitable adhesive as recommended by supplier and adhere to Article 1051.09 of the Standard Specifications.
Bars indicated thus 20x3-#5 etc. indicates 20 lines of bars with 3 lengths per line.

MODEL: Diaphragm Details[Sheet]
FILE NAME: c:\pwworking\primera\pwprod\kuzdal\dms617511\D162W20-Diaphram Details.dgn

Ardmore Roderick

USER NAME = JosephKuzdal	DESIGNED - JPK	REVISED -	
	DRAWN - JPK	REVISED -	
	CHECKED - STB	REVISED -	
PLOT DATE = 5/6/2026	DATE - 5/6/2026	REVISED -	

STATE OF ILLINOIS
DEPARTMENT OF TRANSPORTATION

DIAPHRAGM DETAILS
STRUCTURE NO. 016-0927
SHEET S-13 OF S-36 SHEETS

F.A.I RTE.	SECTION	COUNTY	TOTAL SHEETS	SHEET NO.
80	FAI 80 23 Bridge Replacement 2	COOK	158	88
		CONTRACT NO. 62W20		
	ILLINOIS FED. AID PROJECT			

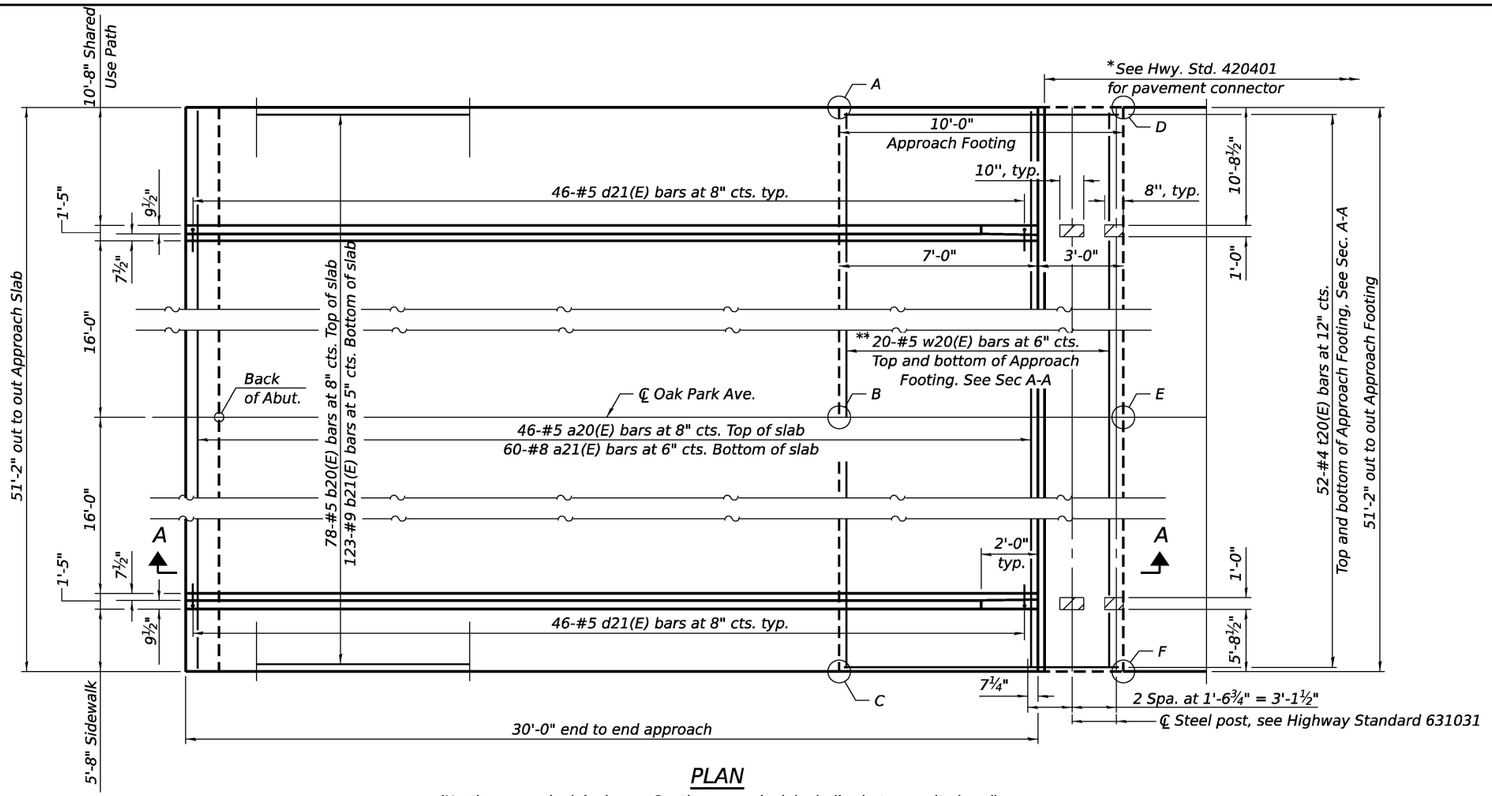

PLAN

(North approach slab shown; South approach slab similar but opposite hand)

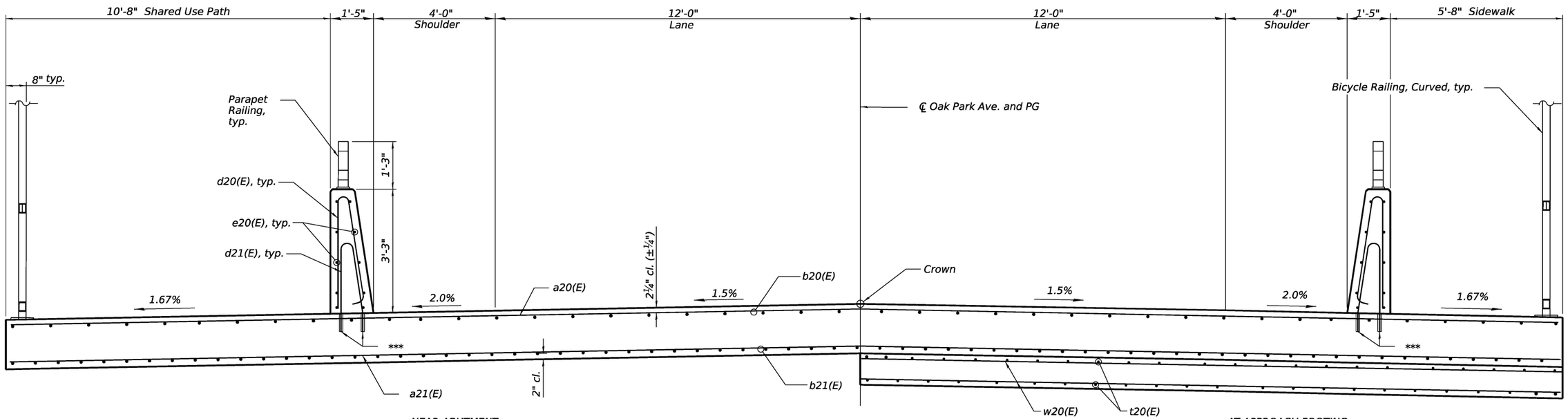

NEAR ABUTMENT

(North Abutment Shown, South Abutment Similar)

CROSS SECTION

(Looking North)

AT APPROACH FOOTING

(North Approach Footing Shown, South Approach Footing Similar)

**If guardrail is installed after placement of connector slab, cotractor to provide 1'-0" wide blockout in connector slab for installation of guardrail posts. Blockout to be backfilled with concrete after guardrail installation. Use same mix as connector pavement.*

***Cut #5 w20(E) bars at blockouts. Provide 2" of clear cover to cut ends.*

****Drill and set #5 d21(E) bar according to article 509.06 of the Standard Specifications. Drilled holes shall be roughened or scored per manufacturer's recommendations. Maximum depth of hole shall not exceed 6". Contractor shall take all necessary precautions to prevent drilled hole interface with approach slab reinforcement bars. Locate drilled holes to miss transverse bars in approach slab. Locate longitudinal bars to miss drilled locations.*

TOP AND BOTTOM ELEVATIONS FOR APPROACH FOOTING

South Approach			North Approach		
Point/ Location	Top	Bottom	Point/ Location	Top	Bottom
A - NW	717.30	716.47	A - SW	717.21	716.38
B - N-CL	717.68	716.84	B - S-CL	717.67	716.84
C - NE	717.22	716.38	C - SE	717.29	716.46
D - SW	717.07	716.24	D - NW	716.98	716.15
E - S-CL	717.44	716.60	E - N-CL	717.44	716.61
F - SE	716.98	716.14	F - NE	717.06	716.23

LEGEND

Concrete Blockout in Approach Footing

(Sheet 1 of 2)

MODEL: Approach Slab Plan and Cross Section [Sheet]
FILE NAME: c:\pwworking\primeral\pwprod\kludzia\dms617511\D162W20-Approach Slab Plan and Cross Section.dgn

Ardmore Roderick

USER NAME = kingaludzia	DESIGNED - MS	REVISED -	
	DRAWN - MS	REVISED -	
	CHECKED - STB	REVISED -	
PLOT DATE = 5/6/2026	DATE - 5/6/2026	REVISED -	

STATE OF ILLINOIS
DEPARTMENT OF TRANSPORTATION

APPROACH SLAB PLAN AND CROSS SECTION
STRUCTURE NO. 016-0927

SHEET S-14 OF S-36 SHEETS

F.A.I RTE.	SECTION	COUNTY	TOTAL SHEETS	SHEET NO.
80	FAI 80 23 Bridge Replacement 2	COOK	158	89
		CONTRACT NO. 62W20		
		ILLINOIS FED. AID PROJECT		

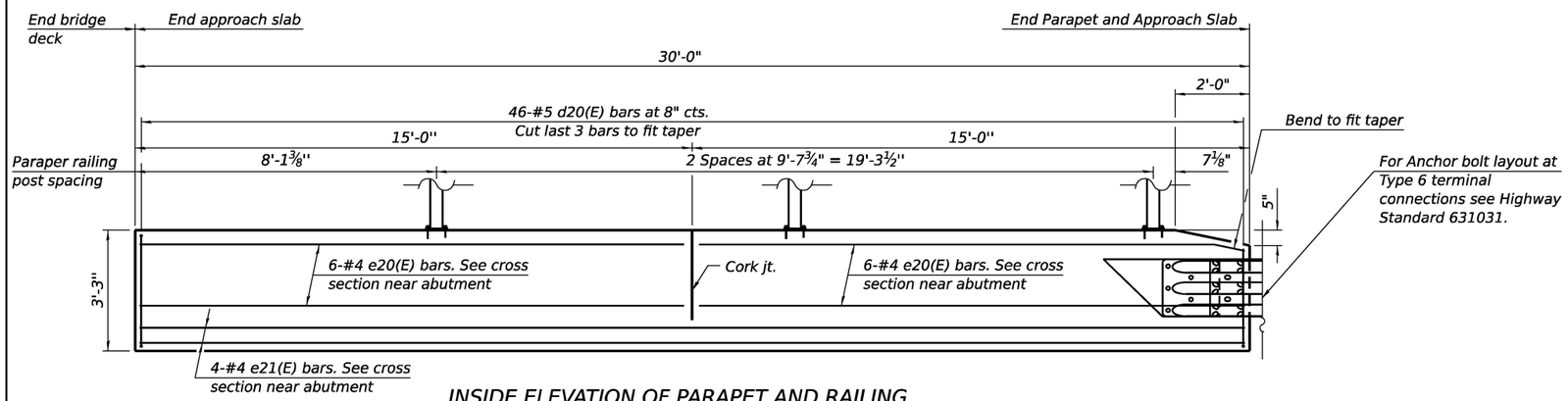

INSIDE ELEVATION OF PARAPET AND RAILING

(North west parapet shown, other three similar)

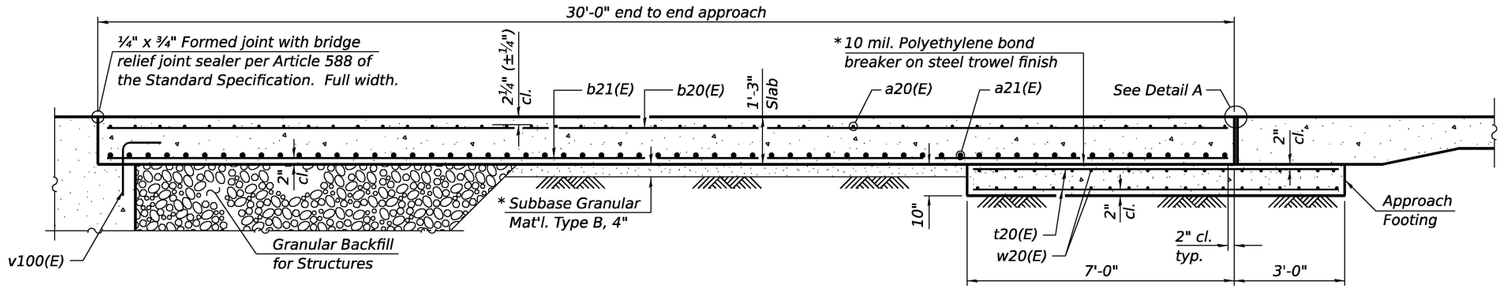

SECTION A-A

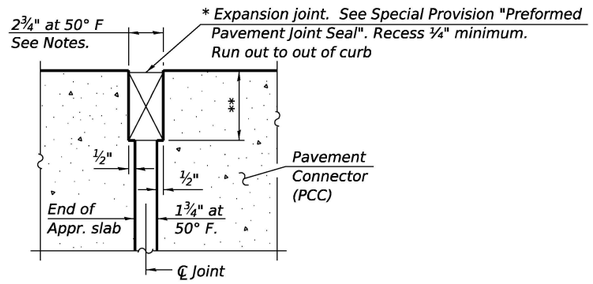

DETAIL A

* Cost included with Concrete Superstructure (Approach Slab).

** Per manufacturer recommendations

Notes:

The joint opening shall be adjusted for temperature per Article 520.04 of the Standard Specifications. However, since this detail is for jointless structures, the length of bridge used to calculate the adjustment shall be equal to half the total bridge length plus the length of the bridge approach slab.

Parapet concrete shall be paid for as Concrete Superstructure.

Approach slab shall be paid for as Concrete Superstructure (Approach Slab).

Approach footing concrete shall be paid for as Concrete Structures.

The approach footing maximum applied service bearing pressure (Qmax) = 2.0 ksf.

Cost of excavation for approach footing included with Concrete Structures.

For Granular Backfill for Structures and drainage treatment details, see sheet S-2 of S-36.

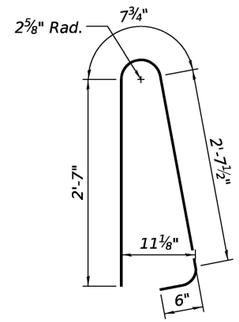

BAR d20(E)

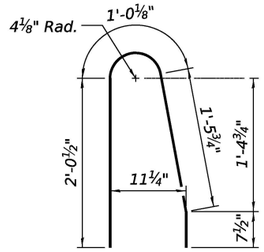

BAR d21(E)

TWO APPROACHES BILL OF MATERIAL

Bar	No.	Size	Length	Shape
a20(E)	92	#5	50'-10"	—
a21(E)	120	#8	50'-10"	—
b20(E)	156	#5	29'-8"	—
b21(E)	246	#9	29'-8"	—
d20(E)	184	#5	6'-5"	⌇
d21(E)	184	#5	5'-2"	⌇
e20(E)	48	#4	14'-8"	—
e21(E)	16	#4	29'-8"	—
t20(E)	208	#4	9'-8"	—
w20(E)	80	#5	50'-10"	—
Concrete Superstructure		Cu. Yd.	15.4	
Concrete Superstructure (Approach Slab)		Cu. Yd.	142.2	
Concrete Structures		Cu. Yd.	31.6	
Reinforcement Bars, Epoxy Coated		Pound	59,400	

MODEL: Approach Slab Details [Sheet]
FILE NAME: c:\pwworking\primeral\pwprod\kingaludzia\dms617751\D162W20-Approach Slab Details.dgn

Ardmore Roderick

USER NAME = kingaludzia	DESIGNED - MS	REVISED -	
	DRAWN - MS	REVISED -	
	CHECKED - STB	REVISED -	
PLOT DATE = 5/6/2026	DATE - 5/6/2026	REVISED -	

STATE OF ILLINOIS
DEPARTMENT OF TRANSPORTATION

APPROACH SLAB DETAILS
STRUCTURE NO. 016-0927

SHEET S-15 OF S-36 SHEETS

F.A.I RTE.	SECTION	COUNTY	TOTAL SHEETS	SHEET NO.
80	FAI 80 23 Bridge Replacement 2	COOK	158	90
		CONTRACT NO. 62W20		
	ILLINOIS FED. AID PROJECT			

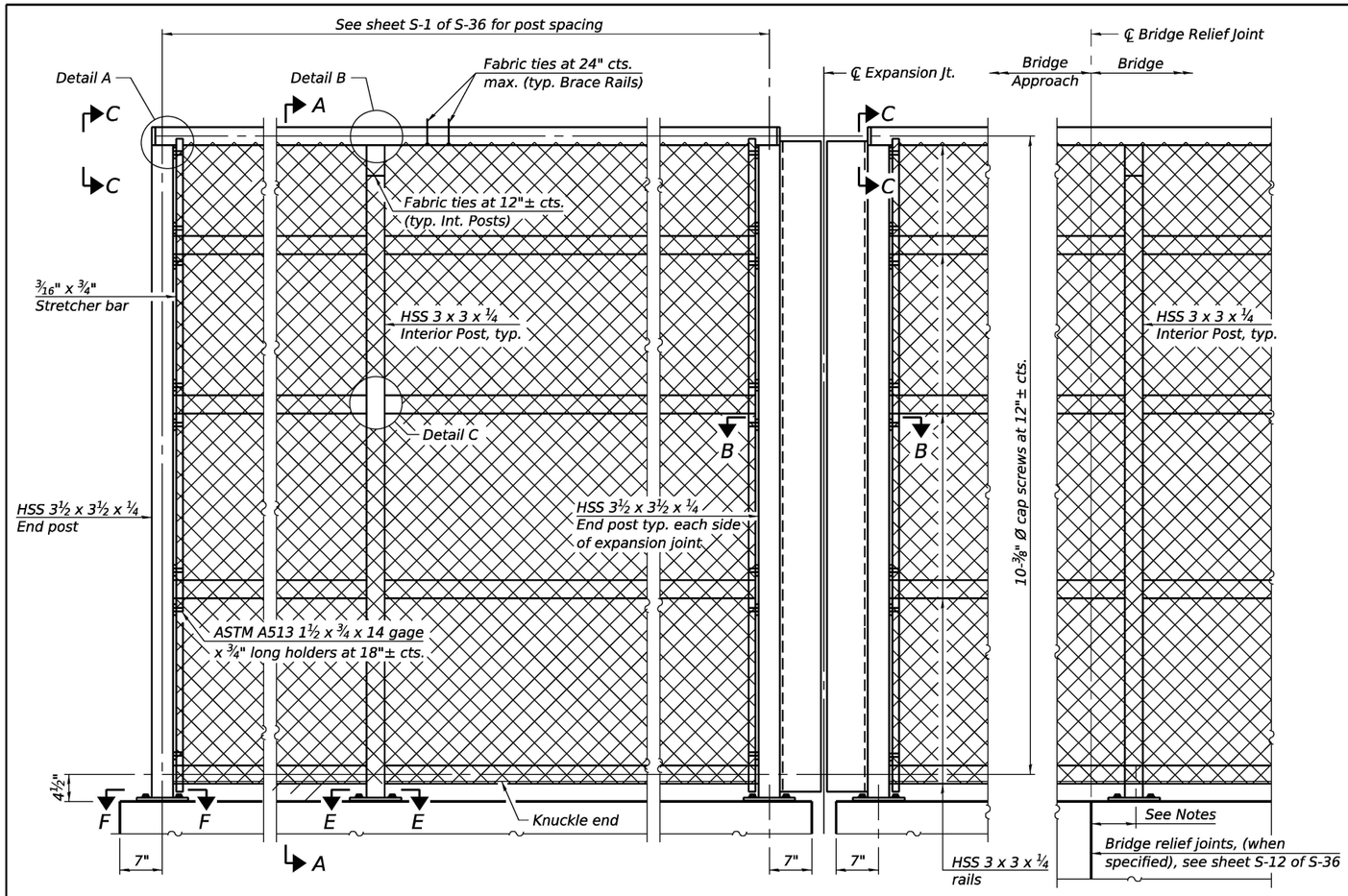

ELEVATION BICYCLE RAILING, CURVED

(Inside face)

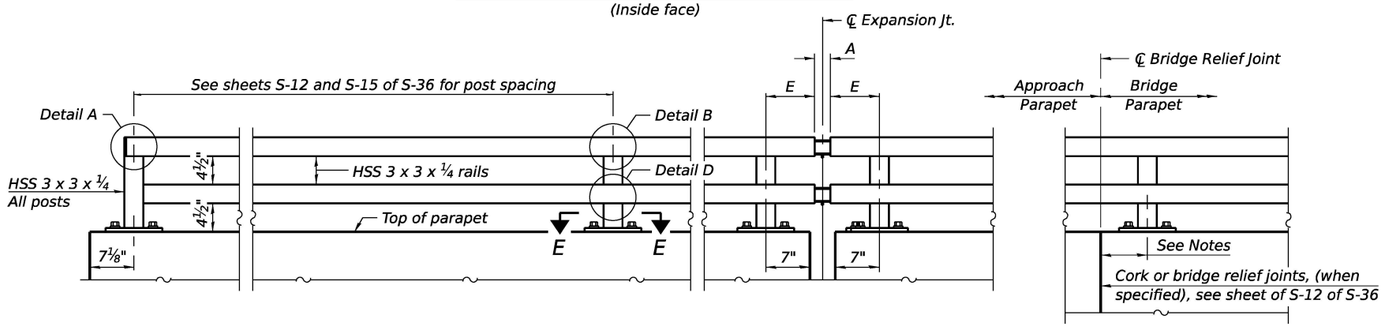

ELEVATION PARAPET RAILING

(Inside face)

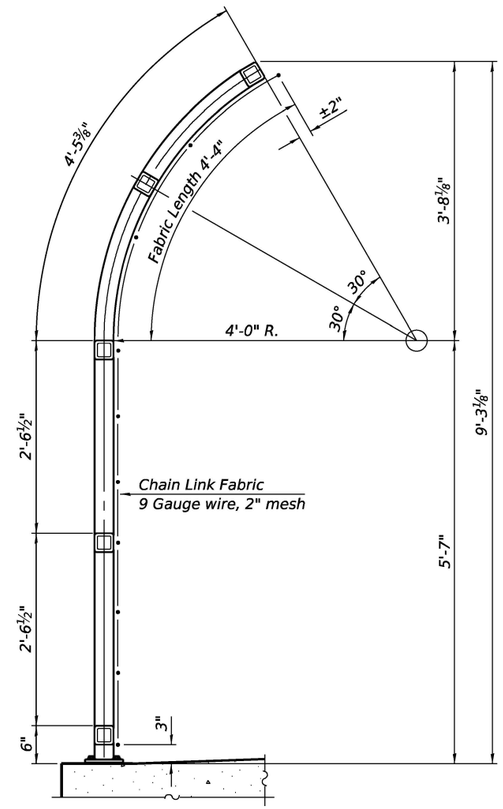

SECTION A-A

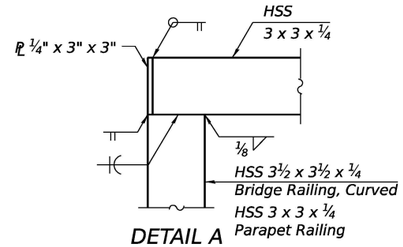

DETAIL A

(Parapet railing shown, bicycle railing similar)

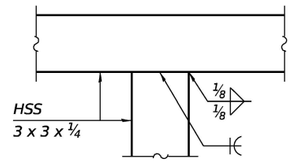

DETAIL B

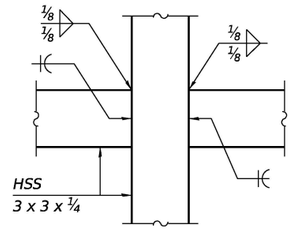

DETAIL C

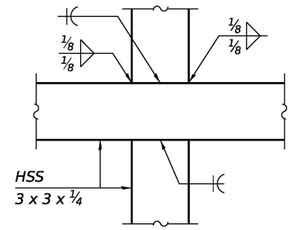

DETAIL D

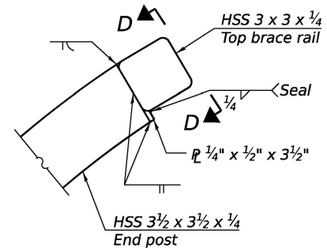

VIEW C-C

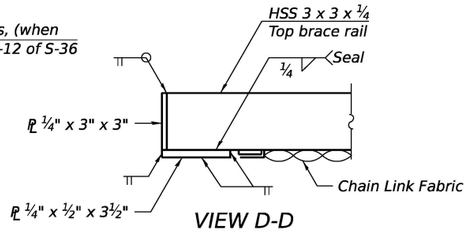

VIEW D-D

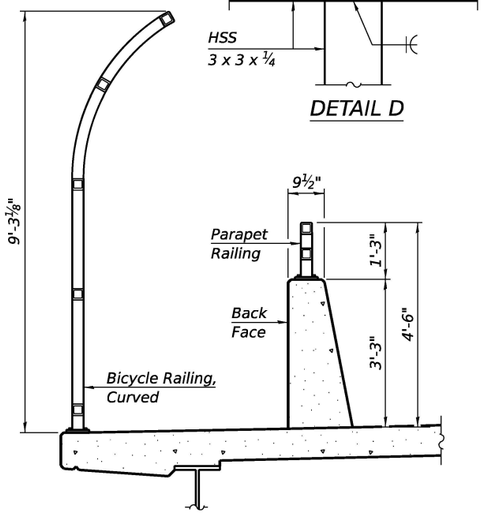

SECTION THRU DECK

RAILING CRITERIA

MASH 2016 Test Level	4
Parapet Railing Weight (plf)	25
Bicycle Railing Weight (plf)	75
Max Post Spacing	10'-0"

R-33

4-4-2025

(Sheet 1 of 2)

MODEL: Bicycle Railing Curved and Parapet Railing I [Sheet]
FILE NAME: c:\pwworking\pntmeral\pwprod\Mudzaldms6175\1\D162W20-Bicycle Railing, Curved and Parapet Railing I.dgn

Ardmore Roderick

USER NAME = nickbrustin	DESIGNED - MS	REVISED -	
	DRAWN - MS	REVISED -	
	CHECKED - STB	REVISED -	
PLOT DATE = 5/6/2026	DATE - 5/6/2026	REVISED -	

STATE OF ILLINOIS
DEPARTMENT OF TRANSPORTATION

BICLYCLE RAILING, CURVED AND PARAPET RAILING I
STRUCTURE NO. 016-0927

SHEET S-16 OF S-36 SHEETS

F.A.I RTE.	SECTION	COUNTY	TOTAL SHEETS	SHEET NO.
80	FAI 80 23 Bridge Replacement 2	COOK	158	91
		CONTRACT NO. 62W20		
		ILLINOIS	FED. AID PROJECT	

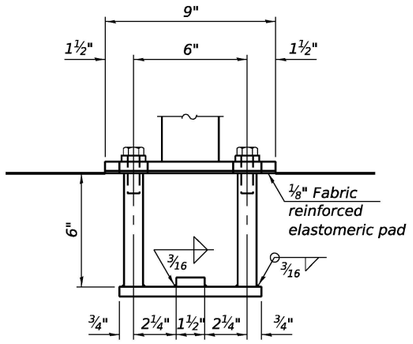

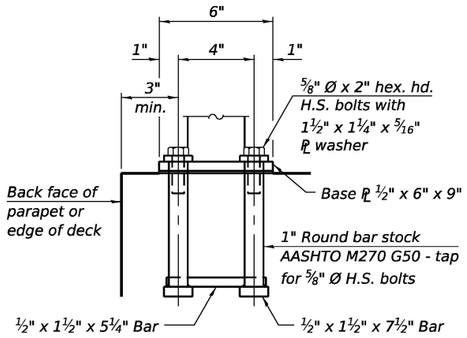

ANCHORAGE ASSEMBLY

The Bicycle Railing, Curved fasteners for end posts near expansion joints may need to be installed prior to installing the bent plates.

In lieu of the cast-in-place anchor device shown, the Contractor has the option of drilling and setting ⅝" Ø fully threaded anchor rods with the same plate washers as specified above and heavy hex lock nuts according to Article 509.06 of the Standard Specifications. Embedment shall be according to the manufacturer's specifications.

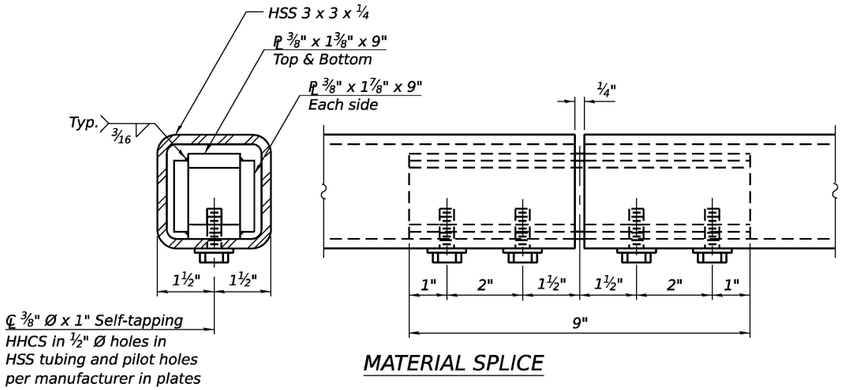

MATERIAL SPLICE

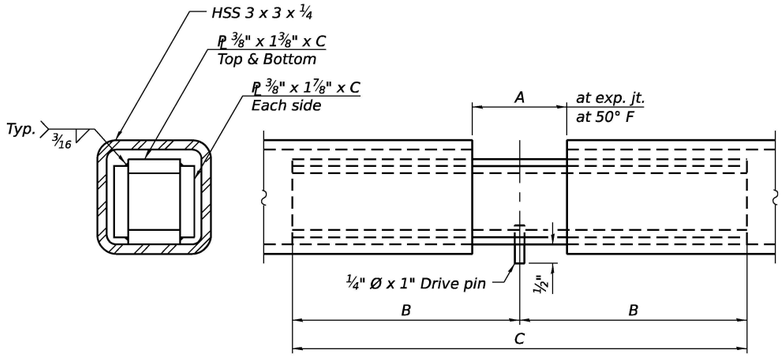

EXPANSION SPLICE

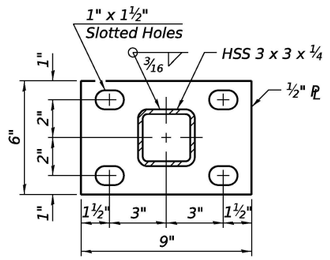

SECTION E-E

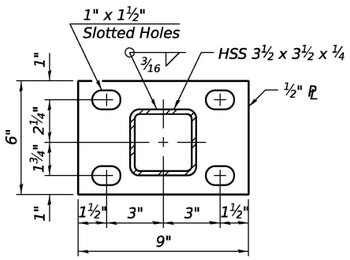

SECTION F-F

Notes:

Place reinforcement bars to miss anchor rod locations.

CVN testing is not required for the HSS tubing used in the Bicycle Railing, Curved.

All HSS tubing used for the Parapet Railing shall be CVN tested according to Article 1006.34(b) of the Standard Specifications.

All HSS tubing used for the Parapet Railing shall be ASTM A500 grade C.

All base plates used for the Parapet Railing shall be AASHTO M270 grade 50.

All heavy hex nuts shall be according to ASTM A 563 grade DH.

All fully threaded anchor rods shall be ASTM F1554 grade 105.

The post base plate shall be fastened to the curb snug tight and given an additional ⅛" turn.

Contractor shall offset posts to miss any aluminum sheet or cork joints for sufficient installation of the anchorage assembly.

Rail splice inserts may be built out of bent plates of the same thicknesses and outside geometry limits as the 4 plate rail splice inserts shown.

When the contract specifies a galvanized railing, all steel rail elements shall be galvanized according to Article 509.05 of the Standard Specifications. When the contract specifies a painted railing, all posts, rail, splices, anchor devices and plates of the railing shall be painted according to the paint system for railings as specified in the General Notes.

See sheet S-12 of S-36 for dimensions of concrete openings at expansion joints.

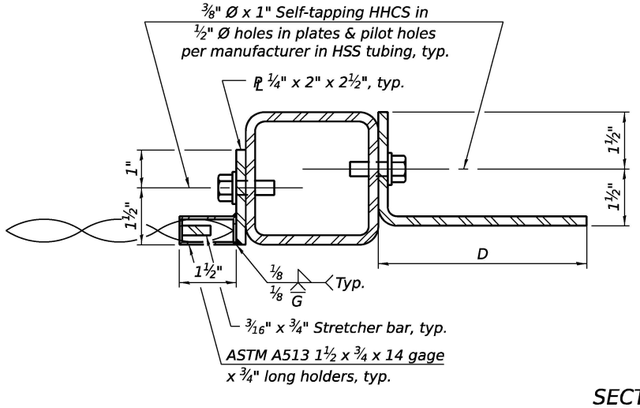

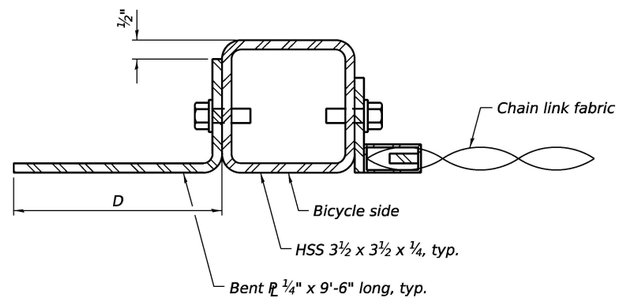

SECTION B-B

TABLE OF DIMENSIONS

Location	T	A	B	C	D	E
Over Strip Seal Jt.	≤4"	2½"	1'-2"	2'-4"	3¾"	6¼"
Over Finger or Modular Jt.	≤9½"	5½"	1'-7¾"	3'-3½"	6"	9¾"
Over Finger or Modular Jt.	≤15"	8¼"	2'-1¼"	4'-2½"	8¾"	13⅞"
At Light Poles	8"	NA - Coordinate 8" Wide Access With Fabricator				
At Bridge Relief Joints	NA - Material Splices Per Fabricator					

T= ; total movement based on total temperature range from -20°F to 120°F along centerline of roadway at expansion joint.
OR
8" hand-hole access for maintenance of light poles (when present; replace splice with 8" gap).

BILL OF MATERIAL

Item	Unit	Quantity
Bicycle Railing, Curved	Foot	568
Parapet Railing	Foot	560

R-33

4-4-2025

MODEL: Bicycle Railing Curved and Parapet Railing II [Sheet]
FILE NAME: c:\pwworking\primera\pwprod\kludzla\dms617511D1f62W20-Bicycle Railing, Curved and Parapet Railing II.dgn

Ardmore Roderick

USER NAME = kingaludzia	DESIGNED - MS	REVISED -	
	DRAWN - MS	REVISED -	
	CHECKED - STB	REVISED -	
PLOT DATE = 5/6/2026	DATE - 5/6/2026	REVISED -	

STATE OF ILLINOIS
DEPARTMENT OF TRANSPORTATION

BICYCLE RAILING, CURVED AND PARAPET RAILING II
STRUCTURE NO. 016-0927
SHEET S-17 OF S-36 SHEETS

F.A.I RTE.	SECTION	COUNTY	TOTAL SHEETS	SHEET NO.
80	FAI 80 23 Bridge Replacement 2	COOK	158	92
		CONTRACT NO. 62W20		
	ILLINOIS FED. AID PROJECT			

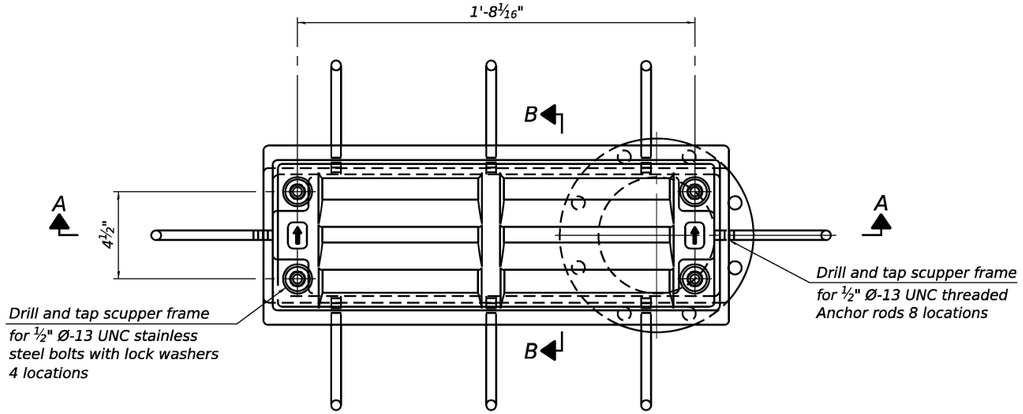

PLAN

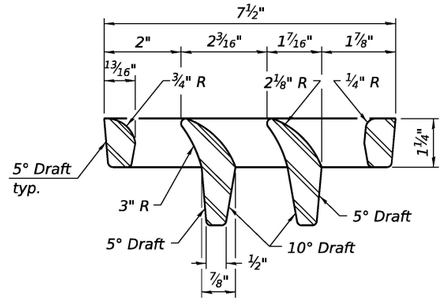

VANE GRATE DETAIL

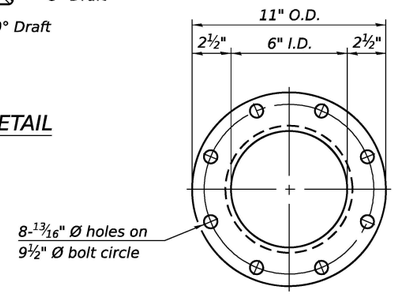

Notes:

All cast iron parts shall be gray iron conforming to the requirements of AASHTO M105, Class 35B and AASHTO M306.

Bolts, anchor rods, nuts and washers shall be according to ASTM A307 and shall be galvanized according to AASHTO M232. As an alternate stainless steel may be used.

Stainless steel hardware shall be according to Article 1006.29(d) of the Standard Specifications.

Structural steel weldments of equal sections and of the same configuration may be substituted for the cast iron scupper frames and downspouts; however, the scupper grates shall remain cast iron. Fillet or full penetration welds shall be used for the weldments. Details shall be submitted to the Engineer for approval.

Structural steel scupper frames and downspouts, when utilized, shall be galvanized according to AASHTO M111.

As an alternate, fiberglass may be used for downspouts according to ASTM D2996 with a short-time rupture strength hoop tensile stress of 30,000 psi min. in lieu of the cast iron or structural steel.

The exterior surfaces of downspouts, and exterior exposed surfaces of the scupper frame below deck shall be the color of the adjacent beam.

The Contractor shall take appropriate measures to assure that Protective Coat is not applied to the scupper.

Cost of the grate, frame, downspout, anchor rods, nuts and washers including complete installation of the scupper shall be paid for at the contract unit price for Drainage Scuppers, DS-12.

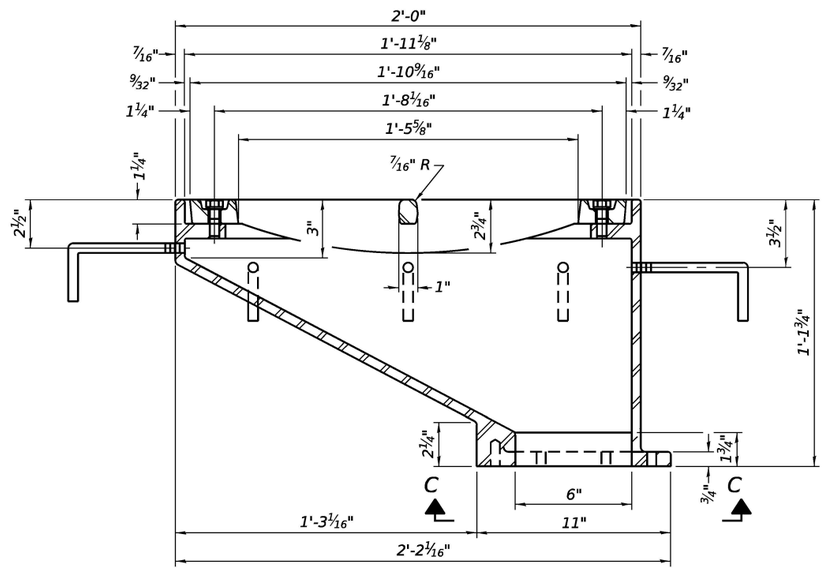

SECTION A-A

See sheet S-11 of S-36 for scupper location relative to parapet.

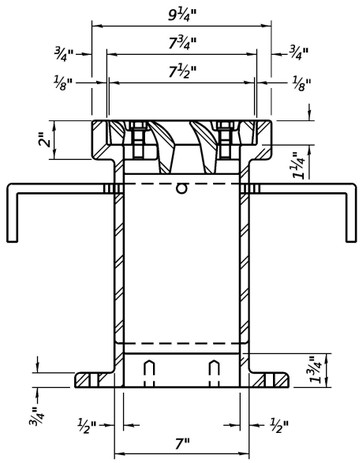

SECTION B-B

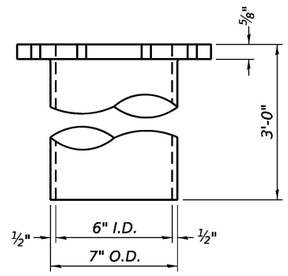

DOWNSPOUT

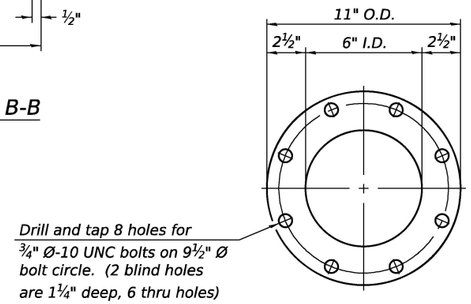

VIEW C-C

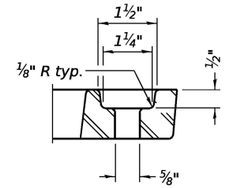

GRATE BOLT HOLE DETAIL

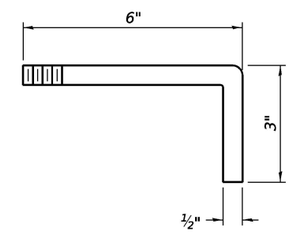

ANCHOR ROD DETAIL

BILL OF MATERIAL

Item	Unit	Quantity
Drainage Scuppers, DS-12	Each	4

DS-12

4-15-2026

Ardmore Roderick

USER NAME = kingaludzia	DESIGNED - MS	REVISED -	
	DRAWN - MS	REVISED -	
	CHECKED - STB	REVISED -	
PLOT DATE = 5/6/2026	DATE - 5/6/2026	REVISED -	

STATE OF ILLINOIS
DEPARTMENT OF TRANSPORTATION

DRAINAGE SCUPPERS, DS-12
STRUCTURE NO. 016-0927

SHEET S-18 OF S-36 SHEETS

F.A.I RTE.	SECTION	COUNTY	TOTAL SHEETS	SHEET NO.
80	FAI 80 23 Bridge Replacement 2	COOK	158	93
		CONTRACT NO. 62W20		
	ILLINOIS FED. AID PROJECT			

MODEL: Drainage Details [Sheet]
FILE NAME: c:\pwworking\primeralpwprod\kludzia\dms61751\D162W20-Drainage Details.dgn

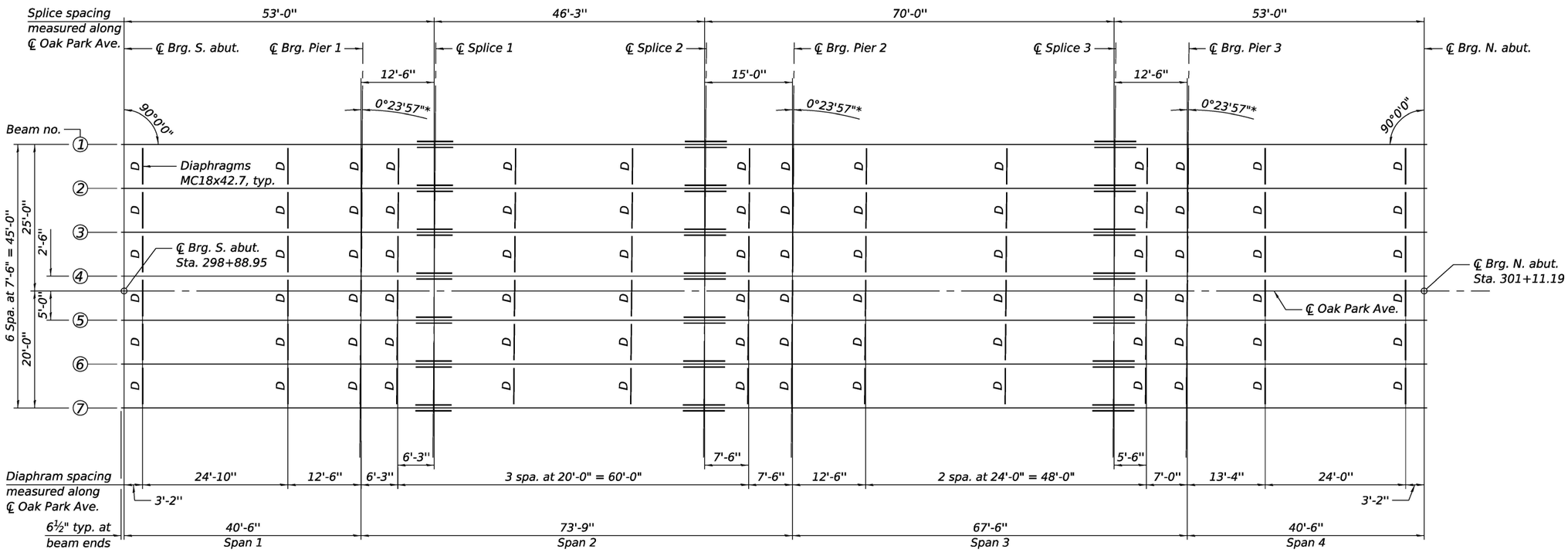

FRAMING PLAN

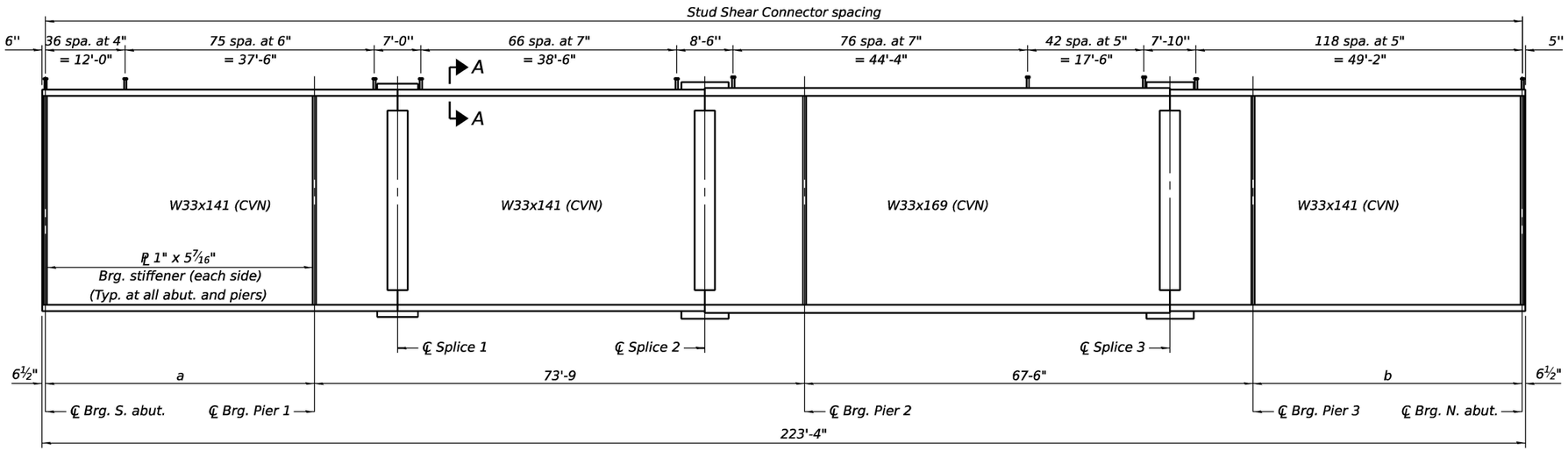

BEAM ELEVATION

(All beams shall be Gr. 50)

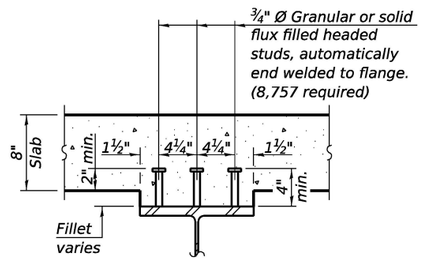

SECTION A-A

BEAM DIMENSIONS

(Measured along ℄ beam)

Beam	a	b
1	40'-8 1/16"	40'-3 15/16"
2	40'-7 1/16"	40'-9 9/16"
3	40'-6 13/16"	40'-5 3/16"
4	40'-6 3/16"	40'-5 15/16"
5	40'-5 9/16"	40'-6 1/16"
6	40'-4 15/16"	40'-7 1/16"
7	40'-4 5/16"	40'-7 11/16"

Notes:

Load carrying components designated "CVN" shall conform to the Charpy-V-Notch Impact Energy Requirements, Zone 2.

All diaphragms shall be installed as steel is erected and secured with erection pins and bolts except as otherwise noted. Individual diaphragms at supports may be temporarily disconnected to install bearing anchor bolts.

MODEL: Framing Plan [Sheet]
FILE NAME: c:\pwworking\primeral\pwprod\kludzla\dms617251\D162W20-Framing Plan.dgn

Ardmore Roderick

USER NAME = kingaludzia	DESIGNED - KL	REVISED -	
	DRAWN - NMB	REVISED -	
	CHECKED - STB	REVISED -	
PLOT DATE = 5/6/2026	DATE - 5/6/2026	REVISED -	

STATE OF ILLINOIS
DEPARTMENT OF TRANSPORTATION

FRAMING PLAN
STRUCTURE NO. 016-0927
SHEET S-19 OF S-36 SHEETS

F.A.I RTE.	SECTION	COUNTY	TOTAL SHEETS	SHEET NO.
80	FAI 80 23 Bridge Replacement 2	COOK	158	94
		CONTRACT NO. 62W20		
	ILLINOIS FED. AID PROJECT			

INTERIOR GIRDER MOMENT TABLE								
		0.3 Span 1	Pier 1	0.5 Span 2	Pier 2	0.5 Span 3	Pier 3	0.6 Span 4
I_s	(in^4)	7450	7450	7450	9290	9290	7450	7450
$I_{c(n)}$	(in^4)	21236	21236	21236	25187	25187	21236	21236
$I_{c(3n)}$	(in^4)	16055	16055	16055	18798	18798	16055	16055
$I_{c(cr)}$	(in^4)	-	9878	-	11840	-	9878	-
S_s	(in^3)	448	448	448	549	549	448	448
$S_{c(n)}$	(in^3)	667	667	667	800	800	667	667
$S_{c(3n)}$	(in^3)	609	609	609	728	728	609	609
$S_{c(cr)}$	(in^3)	-	504	-	608	-	504	-
S_x	(in^3)	766	512	766	623	877	512	766
DC1	(k/')	0.81	0.81	0.81	0.81	0.81	0.81	0.81
M_{DC1}	('k)	39	-335	253	-491	200	-248	37
DC2	(k/')	0.18	0.18	0.18	0.18	0.18	0.18	0.18
M_{DC2}	('k)	8	-64	48	-89	36	-46	7
DW	(k/')	0.23	0.23	0.23	0.23	0.23	0.23	0.23
M_{DW}	('k)	10	-80	60	-112	45	-58	18
LLDF		0.71	0.66	0.64	0.64	0.65	0.67	0.71
M_{LL+IM}	('k)	269	-628	606	-705	559	-516	255
f_l (Strength I)	(ksi)	0	0	0	0	0	0	0
$M_u + 1/3\ f_l S_x$	('k)	544	-1717	1526	-2128	1341	-1357	528
$\phi_f M_n$	('k)	3446	2219	3446	2717	4005	2219	3446
f_s DC1	(ksi)	1.05	-8.96	6.77	-10.73	4.38	-6.64	0.99
f_s DC2	(ksi)	0.15	-1.51	0.94	-1.76	0.59	-1.10	0.14
f_s DW	(ksi)	0.02	-1.90	1.19	-2.22	0.74	-1.38	0.36
f_s (LL+IM)	(ksi)	4.85	-14.96	10.90	-13.91	8.39	-12.28	4.58
f_l (Service II)	(ksi)	0	0	0	0	0	0	0
$f_s + f_l/2$ (Service II)	(ksi)	7.52	-31.83	23.07	-32.79	16.61	-25.08	7.44
Service II Resistance	(ksi)	47.5	47.5	47.5	47.5	47.5	47.5	47.5
$f_s + f_l/3$ (Strength I)	(ksi)	10.01	-42.13	30.50	-43.28	22.00	-33.23	9.97
$\phi_f F_n$	(ksi)	-	-	-	-	-	-	-
V_f	(k)	34.52	-	35.73	-	35.86	-	32.52

GIRDER REACTION TABLE						
		S. Abut.	Pier 1	Pier 2	Pier 3	N. Abut.
LLDF		0.78	0.78	0.78	0.78	0.78
OCF		-	-	-	-	-
R_{DC1}	(k)	12.3	60.9	75.9	53.9	15.5
R_{DC2}	(k)	2.3	11.5	13.9	10.0	2.9
$R_{Approach}$	(k)	25.3	-	-	-	25.3
R_{DW}	(k)	2.9	14.5	17.4	12.6	3.7
R_{LL}	(k)	53.5	90.5	92.1	84.4	55.1
R_{IM}	(k)	15.6	19.5	17.9	18.8	15.6
R_{Total} (Strength I)(Impact)	(k)	175	305	331	279	184
R_{Total} (Strength I)(No Impact)	(k)	148	271	300	246	157

TOP OF BEAM ELEVATIONS (FOR FABRICATION ONLY)								
Location	℄ Bearing S. Abut	℄ Bearing Pier 1	℄ Splice 1	℄ Splice 2	℄ Bearing Pier 2	℄ Splice 3	℄ Bearing Pier 3	℄ Bearing N. Abut.
Beam 1	718.32	718.83	718.96	719.21	719.18	718.94	718.80	718.32
Beam 2	718.45	718.95	719.08	719.33	719.30	719.07	718.93	718.44
Beam 3	718.58	719.09	719.22	719.47	719.44	719.20	719.07	718.58
Beam 4	718.69	719.20	719.33	719.58	719.55	719.31	719.18	718.69
Beam 5	718.66	719.16	719.26	719.54	719.51	719.28	719.14	718.65
Beam 6	718.54	719.04	719.17	719.43	719.40	719.16	719.03	718.54
Beam 7	718.41	718.91	719.04	719.29	719.26	719.03	718.97	718.40

I_s, S_s: *Non-composite moment of inertia and section modulus of the steel section used for computing f_s (Total-Strength I, and Service II) due to non-composite dead loads (in.⁴ and in.³).*

$I_{c(n)}$, $S_{c(n)}$: *Composite moment of inertia and section modulus of the steel and deck based upon the modular ratio, "n", used for computing f_s (Total-Strength I, and Service II) in uncracked sections due to short-term composite live loads (in.⁴ and in.³).*

$I_{c(3n)}$, $S_{c(3n)}$: *Composite moment of inertia and section modulus of the steel and deck based upon 3 times the modular ratio, "3n", used for computing f_s (Total-Strength I, and Service II) in uncracked sections, due to long-term composite (superimposed) dead loads (in.⁴ and in.³).*

$I_{c(cr)}$, $S_{c(cr)}$: *Composite moment of inertia and section modulus of the steel and longitudinal deck reinforcement, used for computing f_s (Total-Strength I and Service II) in cracked sections, due to both short-term composite live loads and long-term composite (superimposed) dead loads (in.⁴ and in.³).*

S_x: *Section modulus about the major axis of a section to the controlling flange, tension or compression, taken as yield moment with respect to the controlling flange over the yield strength of the controlling flange (in.³).*

DC1: *Un-factored non-composite dead load (kips/ft.).*

M_{DC1}: *Un-factored moment due to non-composite dead load (kip-ft.).*

DC2: *Un-factored long-term composite (superimposed excluding future wearing surface) dead load (kips/ft.).*

M_{DC2}: *Un-factored moment due to long-term composite (superimposed excluding future wearing surface) dead load (kip-ft.).*

DW: *Un-factored long-term composite (superimposed future wearing surface only) dead load (kips/ft.).*

M_{DW}: *Un-factored moment due to long-term composite (superimposed future wearing surface only) dead load (kip-ft.).*

LLDF: *Live Load Distribution Factor for moment and shear computed according to Article 4.6.2.2 and further IDOT provisions.*

M_{LL+IM}: *Un-factored live load moment plus dynamic load allowance (impact) (kip-ft.).*

M_u: *Strength I load combination of factored design moments (kip-ft.).*
1.25 (M_{DC1} + M_{DC2}) + 1.5 M_{DW} + 1.75 M_{LL+IM}

f_l: *Factored calculated flange lateral bending stress as calculated using Article 6.10.1.6 and as further simplified by IDOT provisions (ksi).*

$\phi_f M_n$: *Factored nominal flexural resistance of the section determined as specified in Article 6.10.7.1 or A6 as applicable (kip-ft.).*

f_s DC1: *Un-factored stress at edge of flange for controlling steel flange due to vertical non-composite dead loads as calculated below (ksi).*
M_{DC1} / S_s

f_s DC2: *Un-factored stress at edge of flange for controlling steel flange due to vertical composite dead loads as calculated below (ksi).*
M_{DC2} / $S_{c(3n)}$ or M_{DC2} / $S_{c(cr)}$ as applicable.

f_s DW: *Un-factored stress at edge of flange for controlling steel flange due to vertical composite future wearing surface loads as calculated below (ksi).*
M_{DW} / $S_{c(3n)}$ or M_{DW} / $S_{c(cr)}$ as applicable.

f_s (LL+IM): *Un-factored stress at edge of flange for controlling steel flange due to vertical composite live load plus impact loads as calculated below (ksi).*
M_{LL+IM} / $S_{c(n)}$ or M_{LL+IM} / $S_{c(cr)}$ as applicable.

$f_s + f_l/2$ (Service II): *Sum of stresses as computed below (ksi).*
f_s DC1 + f_s DC2 + f_s DW + 1.3 f_s (LL+IM) + f_l /2

Service II Resistance: *Composite ($0.95R_hF_{yf}$) stress capacity according to Article 6.10.4.2 (ksi).*

$f_s + f_l/3$ (Strength I): *Sum of stresses as computed below on non-compact sections (ksi).*
1.25 (f_s DC1 + f_s DC2) + 1.5 f_s DW + 1.75 f_s (LL+IM) + f_l /3

$\phi_f F_n$: *Factored nominal flexural resistance of the section as specified in Article 6.10.7.2 or 6.10.8 as applicable (ksi).*

V_f: *Maximum factored shear range in span computed according to Article 6.10.10.*

OCF: *Obtuse Correction Factor according to Article 4.6.2.2.3c or as further simplified by IDOT provisions.*

R_{DC1}: *Un-factored reaction due to non-composite dead load (kip).*

R_{DC2}: *Un-factored reaction due to long-term composite (superimposed excluding future wearing surface) dead load (kip).*

R_{DW}: *Un-factored reaction due to long-term composite (superimposed future wearing surface only) dead load (kip).*

R_{LL}: *Un-factored live load reaction (kip).*

R_{IM}: *Un-factored dynamic load allowance (impact) (kip).*

R_{Total} (Strength I)(Impact): *Strength I load combination of factored design reactions (kip).*
1.25 (R_{DC1} + R_{DC2}) + 1.5 R_{DW} + 1.75 (R_{LL} + R_{IM})

R_{Total} (Strength I)(No Impact): *Strength I load combination of factored design reactions, not including dynamic load allowance (impact) (kip).*
1.25 (R_{DC1} + R_{DC2}) + 1.5 R_{DW} + 1.75 R_{LL}

MODEL: Structural Steel Details [[Sheet]
FILE NAME: c:\pwworking\primera\pwprod\kludzia\dms61751\D162W20-Structural Steel Details I.dgn

Ardmore Roderick

USER NAME = kingaludzia	DESIGNED - KL	REVISED -
	DRAWN - KL	REVISED -
	CHECKED - STB	REVISED -
PLOT DATE = 5/6/2026	DATE - 5/6/2026	REVISED -

STATE OF ILLINOIS
DEPARTMENT OF TRANSPORTATION

STRUCTURAL STEEL DETAILS I
STRUCTURE NO. 016-0927
SHEET S-20 OF S-36 SHEETS

F.A.I RTE.	SECTION	COUNTY	TOTAL SHEETS	SHEET NO.
80	FAI 80 23 Bridge Replacement 2	COOK	158	95
		CONTRACT NO. 62W20		
		ILLINOIS	FED. AID PROJECT	

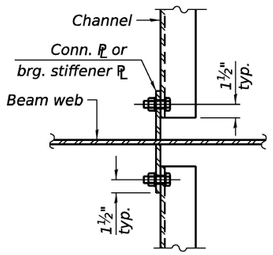

DETAIL A

(At abutments and in span 1 and 4)

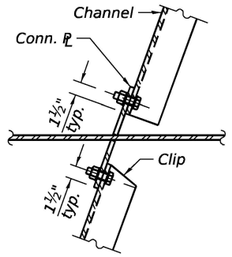

DETAIL A

(At piers and in spans 2 and 3)

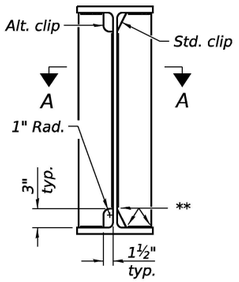

WELD LIMITS AND CLIP DETAILS

** Stop welds ¼" (±⅛") from edges as shown. Typical.

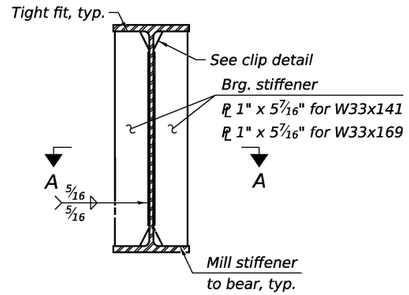

BEARING STIFFENER DETAIL (ABUTMENTS)

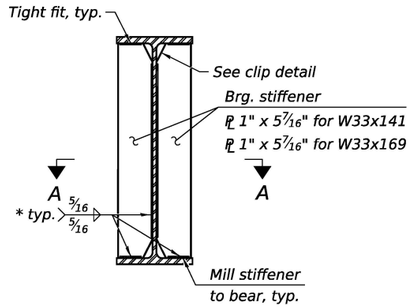

BEARING STIFFENER DETAIL (PIERS)

* Stop welds ¼" (±⅛") from edges as shown. Typical.

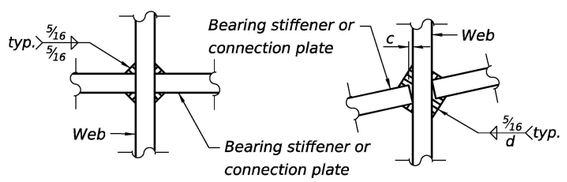

SECTION A-A

(At abutments and in span 1 and 4)

SECTION A-A

(At piers and in spans 2 and 3)

WEB WELD DETAIL

$d = \frac{5}{16} + c$

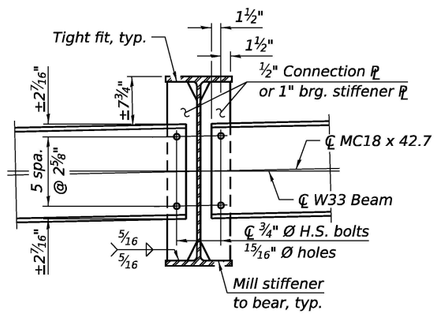

DIAPHRAGM

* 3 sides of each stiffener and/or connection PL.

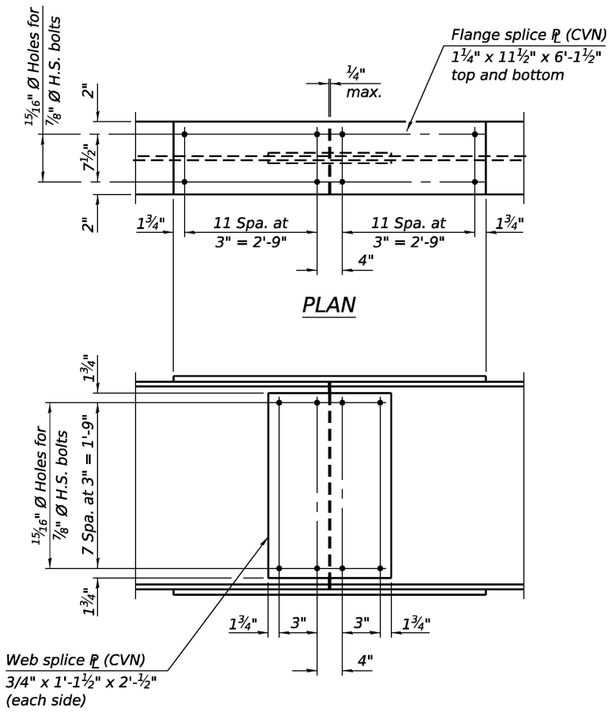

PLAN

ELEVATION

SPLICE 1 DETAIL

(7 Required)

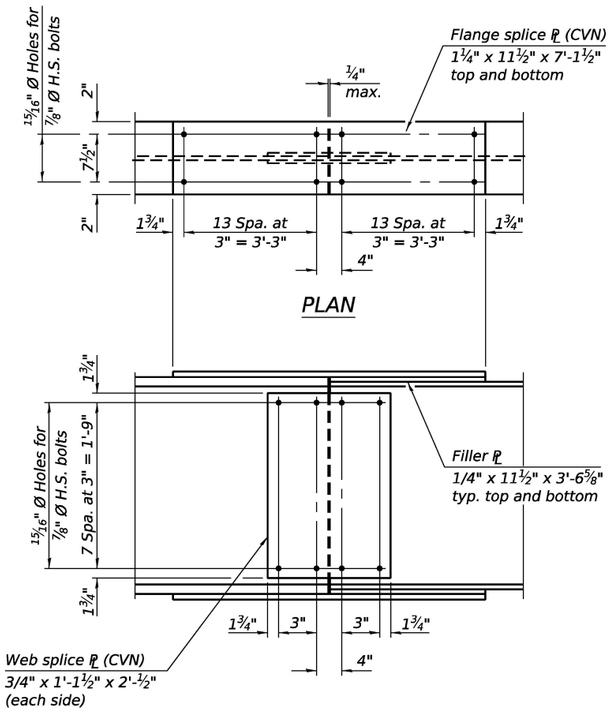

PLAN

ELEVATION

SPLICE 2 & 3 DETAIL

(14 Required)

Notes:

Two hardened washers required for each set of oversized holes.

Alternate channels of equal depth or larger weight are permitted to facilitate material acquisition. Alternate channels, if utilized, shall be provided to no additional cost to the Department.

All diaphragms shall be installed as steel is erected and secured with erection pins and bolts except as otherwise noted. Individual diaphragms at supports may be temporarily disconnected to install bearing anchor bolts.

All bearing plates, side retainers, anchor bolts, nuts, washers, and pintles shall be galvanized according to AASHTO M111 or M232 as applicable.

All splices are symmetrical about ℄ splice except for fill plates.

Load carrying components designated "CVN" shall conform to the Charpy-V-Notch Impac Energy requirements, Zone 2.

All splice plates shall be AASHTO M270, Grade 50.

MODEL: Structural Steel Details II[Sheet]
FILE NAME: c:\pwworking\primeral\pwprod\kingaludzia\dms617751\D162W20-Structural Steel Details II.dgn

Ardmore Roderick

USER NAME = kingaludzia	DESIGNED - KL	REVISED -
	DRAWN - KL	REVISED -
	CHECKED - STB	REVISED -
PLOT DATE = 5/6/2026	DATE - 5/6/2026	REVISED -

STATE OF ILLINOIS
DEPARTMENT OF TRANSPORTATION

STRUCTURAL STEEL DETAILS II
STRUCTURE NO. 016-0927

SHEET S-21 OF S-36 SHEETS

F.A.I RTE.	SECTION	COUNTY	TOTAL SHEETS	SHEET NO.
80	FAI 80 23 Bridge Replacement 2	COOK	158	96
		CONTRACT NO. 62W20		
	ILLINOIS FED. AID PROJECT			

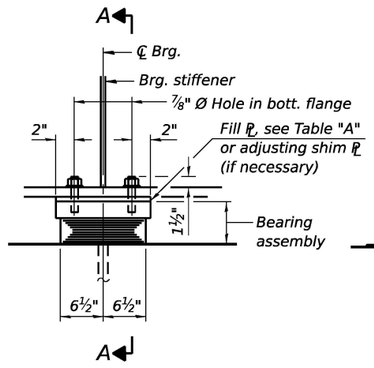

ELEVATION

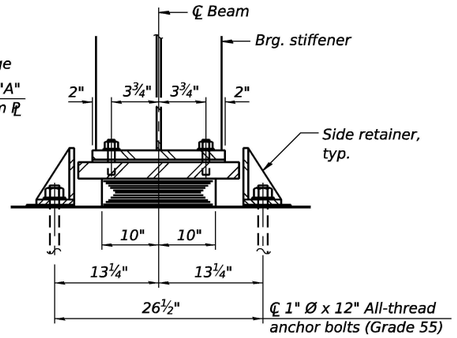

SECTION A-A

℄ 1" Ø x 12" All-thread anchor bolts (Grade 55) with 2¼" x 2¼" x 5/16" ℙ washer under nut.
1½" Ø Holes in bottom ℙ.

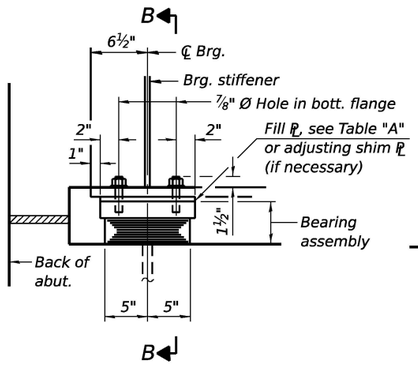

ELEVATION

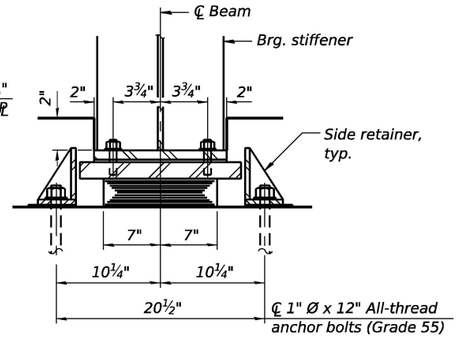

SECTION B-B

℄ 1" Ø x 12" All-thread anchor bolts (Grade 55) with 2¼" x 2¼" x 5/16" ℙ washer under nut.
1½" Ø Holes in bottom ℙ.

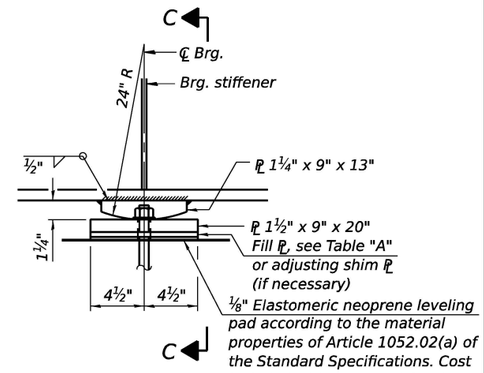

ELEVATION

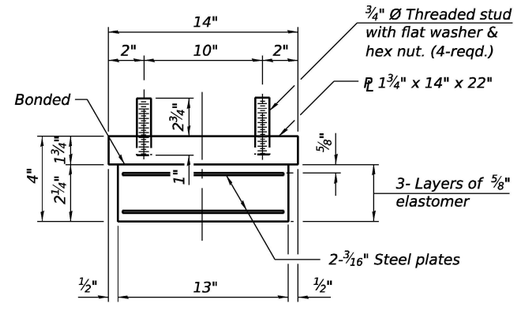

BEARING ASSEMBLY

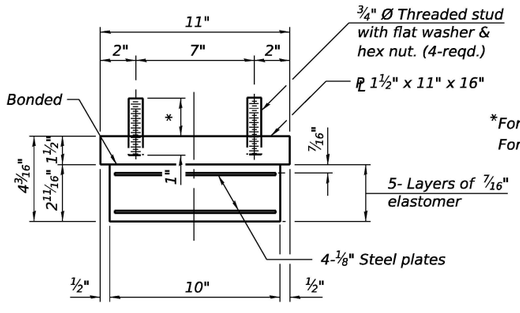

*For beams 1, 2, 6, and 7 = 3½"
For beams 3, 4, and 5 = 4¼"

BEARING ASSEMBLY

Note:
Fill plates and shim plates shall not be placed under bearing assembly.

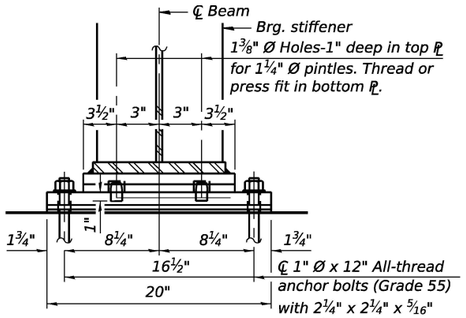

SECTION C-C

℄ 1" Ø x 12" All-thread anchor bolts (Grade 55) with 2¼" x 2¼" x 5/16" ℙ washer under nut.
1½" Ø Holes in bottom ℙ.

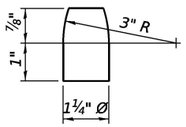

PINTLE

FIXED BEARING AT PIER 2

All steel plates and pintles of the fixed bearing shall be AASHTO M270, Grade 50.

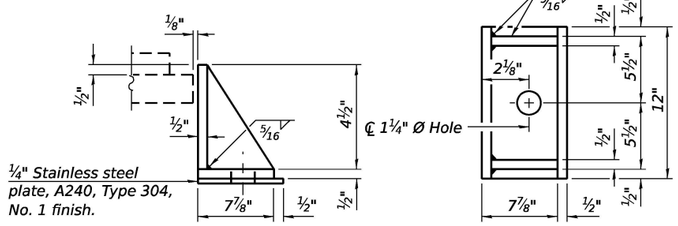

SIDE RETAINER

Equivalent rolled angle with stiffeners will be allowed in lieu of welded plates.

TYPE I ELASTOMERIC EXP. BRG. AT PIERS 1 & 3

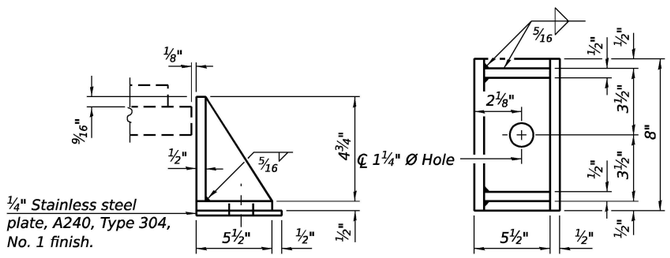

SIDE RETAINER

Equivalent rolled angle with stiffeners will be allowed in lieu of welded plates.

TYPE I ELASTOMERIC EXP. BRG. AT ABUTMENTS

BILL OF MATERIAL

Item	Unit	Total
Elastomeric Bearing Assembly Type I	Each	28
Anchor Bolts, 1"	Each	70

TABLE "A"

	Fill Plate Thickness (in.)				
Beam No.	S. Abut.	Pier 1	Pier 2	Pier 3	N. Abut.
1	¼	-	-	-	⅜
2	½	-	-	-	½
3	1¼	-	-	-	1¼
4	1¾	½	½	½	1¾
5	1¼	-	-	-	1¼
6	1	-	-	-	1
7	⅜	-	-	-	¼

Notes:
Side retainers and stainless steel plates shall be included in the cost of Elastomeric Bearing Assembly, Type I.
Anchor bolts and side retainers at all supports shall be installed as each member is erected unless an equivalent temporary means of lateral restraint is used.
Two ⅛ in. adjusting shims shall be provided for each bearing in addition to the other plates or shims and placed as shown on bearing details.
All bearing plates, side retainers, anchor bolts, nuts, washers, and pintles shall be galvanized according to AASHTO M111 or M232 as applicable.

MODEL: Bearing Details[Sheet]
FILE NAME: c:\pwworking\primera\pwprod\kludzia\dms617511D1620W20-Bearing Details.dgn

Ardmore Roderick

USER NAME = kingaludzia	DESIGNED - KL	REVISED -	
	DRAWN - KL	REVISED -	
	CHECKED - STB	REVISED -	
PLOT DATE = 5/6/2026	DATE - 5/6/2026	REVISED -	

STATE OF ILLINOIS
DEPARTMENT OF TRANSPORTATION

BEARING DETAILS
STRUCTURE NO. 016-0927
SHEET S-22 OF S-36 SHEETS

F.A.I RTE.	SECTION	COUNTY	TOTAL SHEETS	SHEET NO.
80	FAI 80 23 Bridge Replacement 2	COOK	158	97
		CONTRACT NO. 62W20		
	ILLINOIS FED. AID PROJECT			

Notes:

At west end of abutment, remove existing wingwall as shown to accommodate construction of new approach slab and abutment drainage details. End of abutment shall also be removed to expose existing horizontal reinforcement. Cost included with Concrete Removal.

Existing East wingwalls to be partially removed and reconstructed.

Existing vertical reinforcement in East wingwall and horizontal reinforcement at west end of abutment shall be cleaned, straightened, and incorporated into the new construction. Cost included with Concrete Removal.

Any reinforcement bars to be incorporated that are damaged during concrete removal operations shall be repaired or replaced using an approved bar splicer or anchorage system. Cost included with Concrete Removal.

Ends of existing reinforcement bars which are cut and exposed shall be coated with epoxy. Cost included with Concrete Removal.

Remove existing concrete 6" below lowest bearing seat, as shown. Cost included with Concrete Removal.

Remove any additional delaminated concrete on surface down to sound concrete. Cost included with Structural Repair of Concrete.

Existing bearings to be removed. Burn existing anchor bolts flush with concrete surface after concrete removal. Grind existing anchor bolt smooth and seal with epoxy. Cost included with Removal of Existing Superstructures.

LEGEND

Concrete Removal

Epoxy Crack Injection

Structural Repair of Concrete (Depth Equal to or Less than 5 Inches)

BILL OF MATERIAL

Item	Unit	Quantity
Concrete Removal	Cu. Yd.	22.5
Epoxy Crack Injection	Foot	3
Structural Repair of Concrete (Depth Equal to or Less than 5 Inches)	Sq. Ft.	9

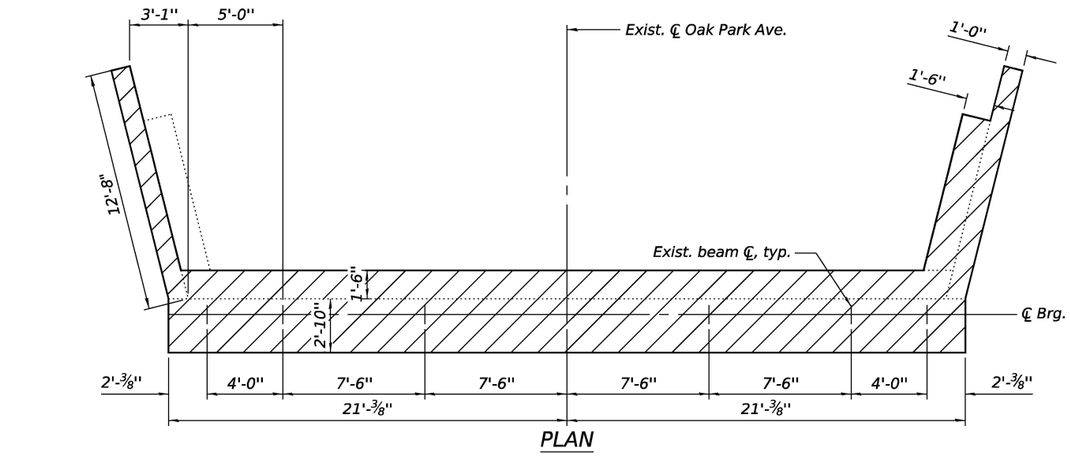

PLAN

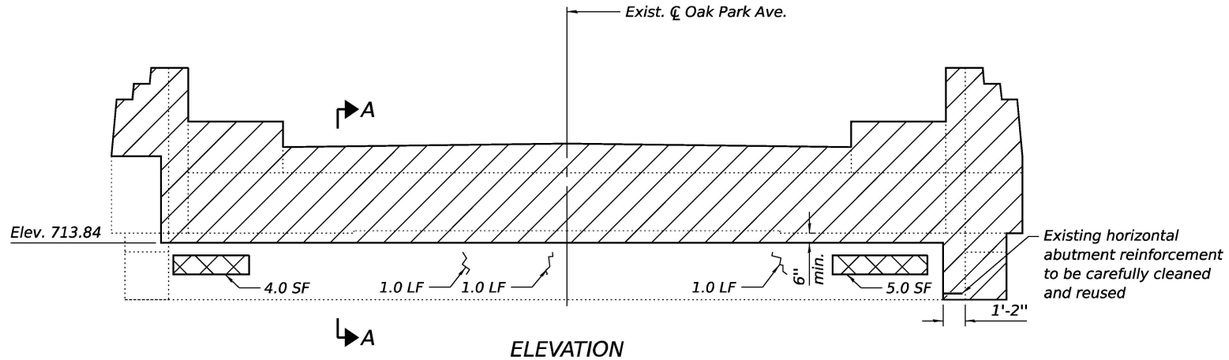

ELEVATION

(Looking South)

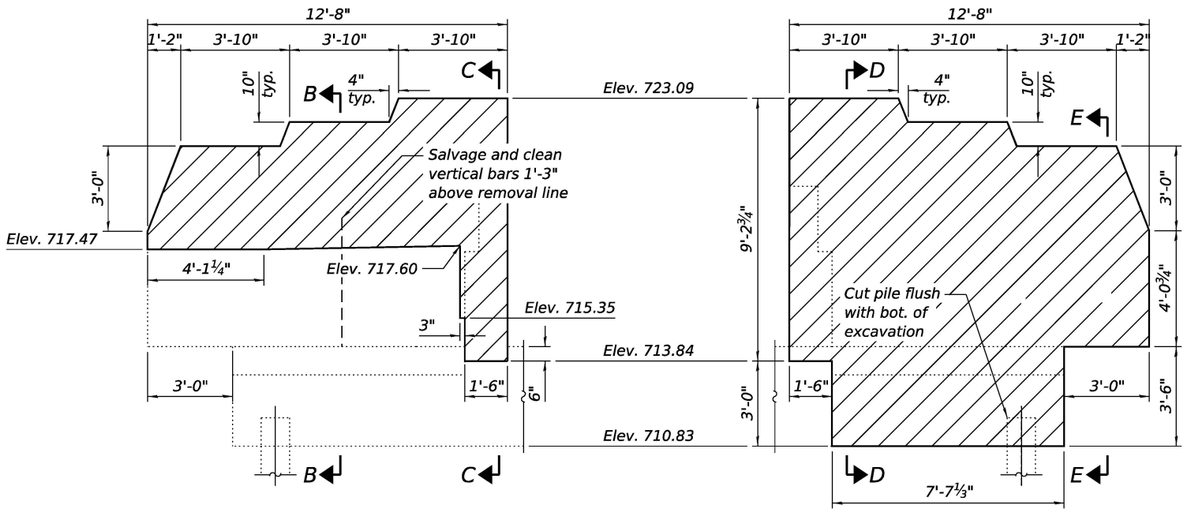

ELEVATION - SE WINGWALL

ELEVATION - SW WINGWALL

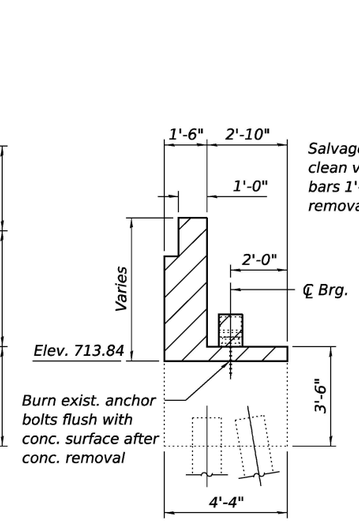

SECTION A-A

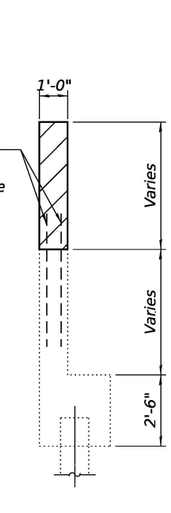

SECTION B-B

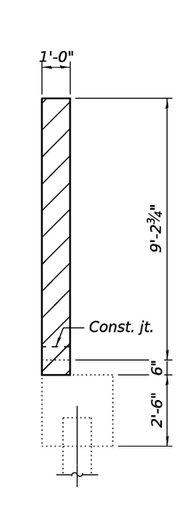

SECTION C-C

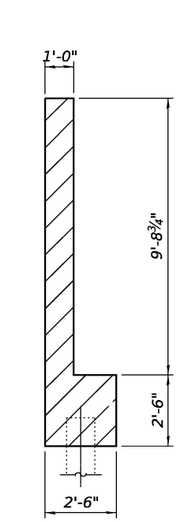

SECTION D-D

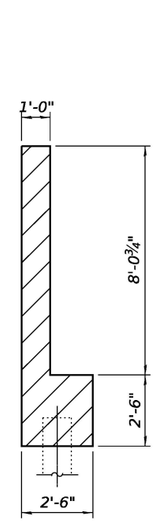

SECTION E-E

MODEL: South Abutment Removal and Repair [Sheet]
FILE NAME: c:\pwworking\primera\pwprod\kludzia\dms61751\D1621V20-South Abutment Removal and Repair Details.dgn

Ardmore Roderick

USER NAME = kingaludzia	DESIGNED - KL	REVISED -	
	DRAWN - KL	REVISED -	
	CHECKED - STB	REVISED -	
PLOT DATE = 5/6/2026	DATE - 5/6/2026	REVISED -	

STATE OF ILLINOIS
DEPARTMENT OF TRANSPORTATION

SOUTH ABUTMENT REMOVAL AND REPAIR DETAILS
STRUCTURE NO. 016-0927

SHEET S-23 OF S-36 SHEETS

F.A.I RTE.	SECTION	COUNTY	TOTAL SHEETS	SHEET NO.
80	FAI 80 23 Bridge Replacement 2	COOK	158	98
		CONTRACT NO. 62W20		
		ILLINOIS	FED. AID PROJECT	

Notes:

At west end of abutment, remove existing wingwall as shown to accommodate construction of new approach slab and abutment drainage details. End of abutment shall also be removed to expose existing horizontal reinforcement. Cost included with Concrete Removal.

Existing East wingwalls to be partially removed and reconstructed.

Existing vertical reinforcement in East wingwall and horizontal reinforcement at west end of abutment shall be cleaned, straightened, and incorporated into the new construction. Cost included with Concrete Removal.

Any reinforcement bars to be incorporated that are damaged during concrete removal operations shall be repaired or replaced using an approved bar splicer or anchorage system. Cost included with Concrete Removal.

Ends of existing reinforcement bars which are cut and exposed shall be coated with epoxy. Cost included with Concrete Removal.

Remove existing concrete 6" below lowest bearing seat, as shown. Cost included with Concrete Removal.

Remove any additional delaminated concrete on surface down to sound concrete. Cost included with Structural Repair of Concrete.

Existing bearings to be removed. Burn existing anchor bolts flush with concrete surface after concrete removal. Grind existing anchor bolt smooth and seal with epoxy. Cost included with Removal of Existing Superstructures.

LEGEND

Concrete Removal

Structural Repair of Concrete (Depth Equal to or Less than 5 Inches)

BILL OF MATERIAL

Item	Unit	Quantity
Concrete Removal	Cu. Yd.	22.5
Structural Repair of Concrete (Depth Equal to or Less than 5 Inches)	Sq. Ft.	15

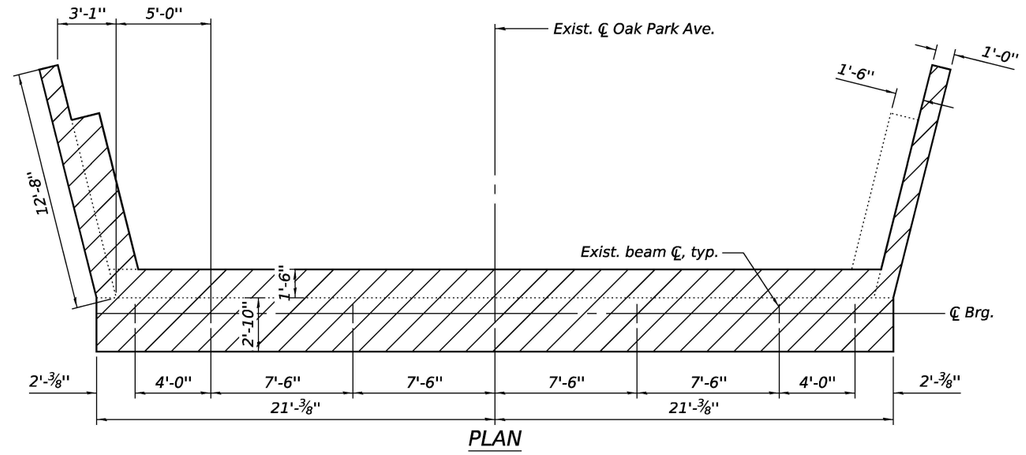

PLAN

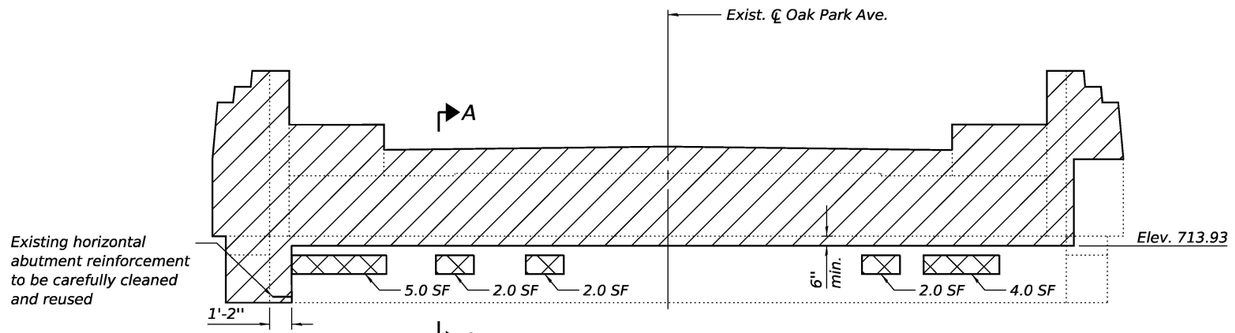

ELEVATION

(Looking North)

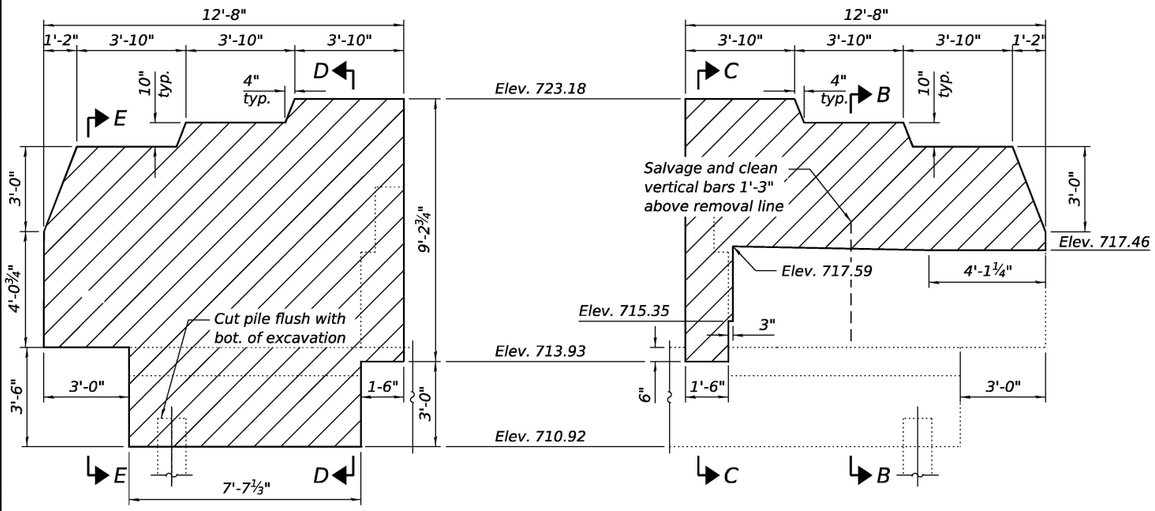

ELEVATION - NW WINGWALL

ELEVATION - NE WINGWALL

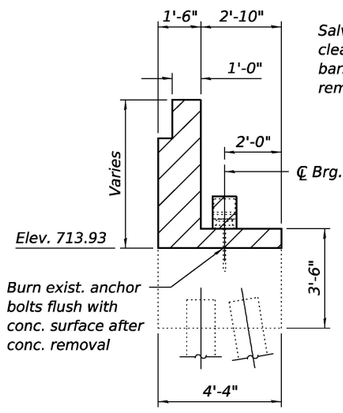

SECTION A-A

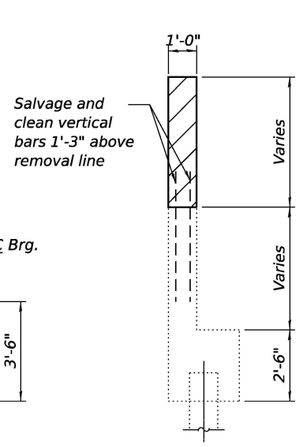

SECTION B-B

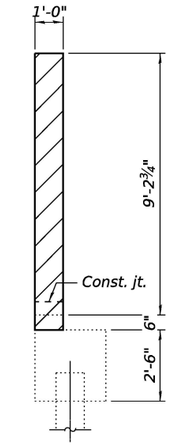

SECTION C-C

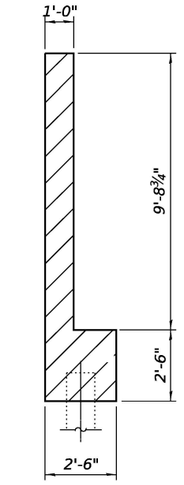

SECTION D-D

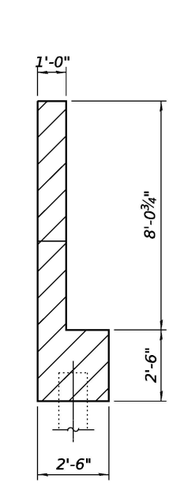

SECTION E-E

MODEL: North Abutment Removal and Repair [Sheet]
FILE NAME: c:\pwworking\primeral\pwprod\kludzia\dms617511D162W20-North Abutment Removal and Repair Details.dgn

Ardmore Roderick

USER NAME = kingaludzia	DESIGNED - KL	REVISED -	
	DRAWN - KL	REVISED -	
	CHECKED - STB	REVISED -	
PLOT DATE = 5/6/2026	DATE - 5/6/2026	REVISED -	

STATE OF ILLINOIS
DEPARTMENT OF TRANSPORTATION

NORTH ABUTMENT REMOVAL AND REPAIR DETAILS
STRUCTURE NO. 016-0927

SHEET S-24 OF S-36 SHEETS

F.A.I RTE.	SECTION	COUNTY	TOTAL SHEETS	SHEET NO.
80	FAI 80 23 Bridge Replacement 2	COOK	158	99
		CONTRACT NO. 62W20		
		ILLINOIS	FED. AID PROJECT	

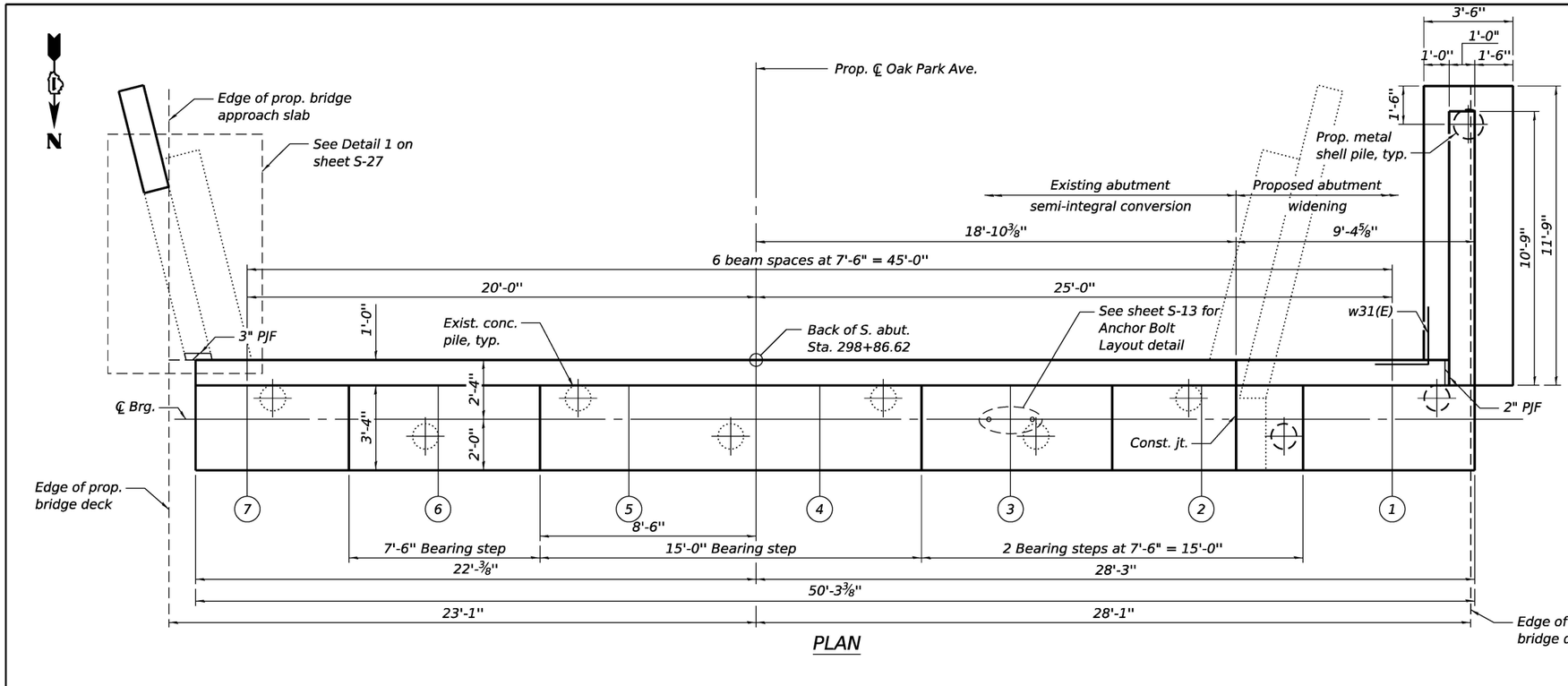

PLAN

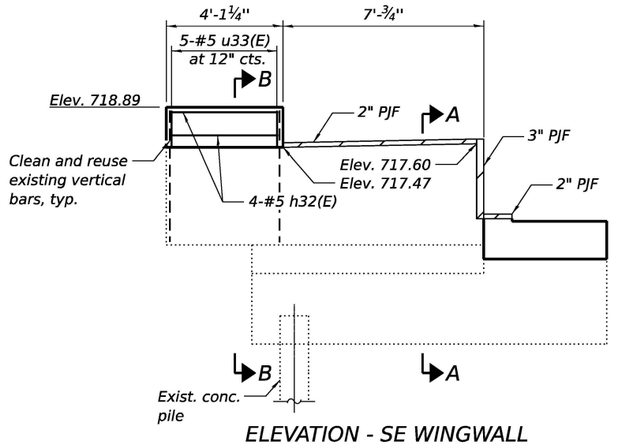

ELEVATION - SE WINGWALL

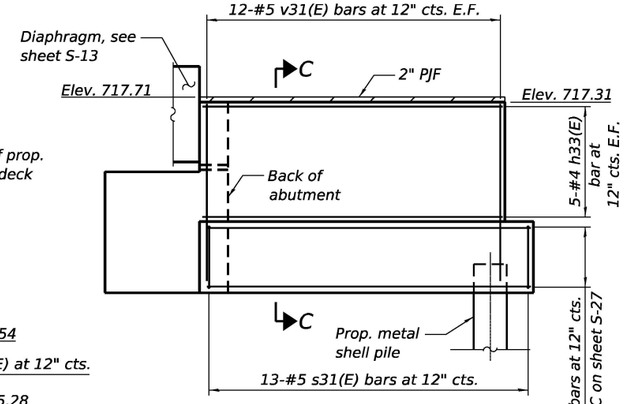

ELEVATION - SW WINGWALL

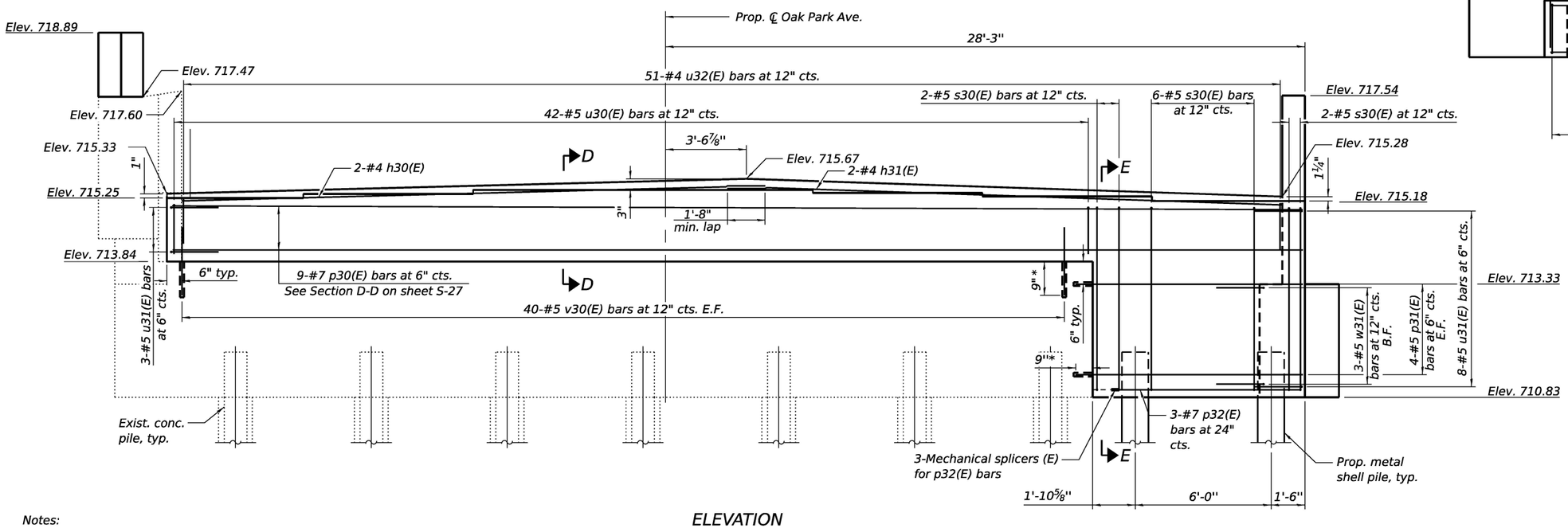

ELEVATION

(Looking South)

Beam No.	Brg. Seat Elevation	Step "T"
1	715.18	
2	715.28	1 1/4
3	715.35	0 7/8
4	715.42	0 7/8
5	715.42	-
6	715.33	1 1/8
7	715.25	1

PILE DATA

Type: 14" Metal Shell x 0.250" w/ Pile Shoes

For South Abutment
Nominal Required Bearing: 328 kips
Factored Resistance Available: 180 kips
Est. Length: 32 ft
No. Production Piles: 1
No. Test Piles: 1

For SW Wingwall
Nominal Required Bearing: 228 kips
Factored Resistance Available: 126 kips
Est. Length: 22 ft
No. Production Piles: 1

Notes:
Existing reinforcement at West edge of exist. abut. shall be cleaned, straightened, and incorporated into the new construction. Cost included with Concrete Removal.
See Sections A-A through E-E on sheet S-27 of S-36.

* Epoxy grout bars in 9" embedment according to Section 584 of Standard Specifications. Cost included with Reinforcement Bars, Epoxy Coated, typ.

MODEL: South Abutment[Sheet]
FILE NAME: c:\pwworking\primeratpwprod\kludzia\dms61751\D162W20-South Abutment.dgn

Ardmore Roderick

USER NAME = kingaludzia	DESIGNED - KL	REVISED -
	DRAWN - KL	REVISED -
	CHECKED - STB	REVISED -
PLOT DATE = 5/6/2026	DATE - 5/6/2026	REVISED -

STATE OF ILLINOIS
DEPARTMENT OF TRANSPORTATION

SOUTH ABUTMENT
STRUCTURE NO. 016-0927
SHEET S-25 OF S-36 SHEETS

F.A.I RTE.	SECTION	COUNTY	TOTAL SHEETS	SHEET NO.
80	FAI 80 23 Bridge Replacement 2	COOK	158	100
		CONTRACT NO. 62W20		
		ILLINOIS	FED. AID PROJECT	

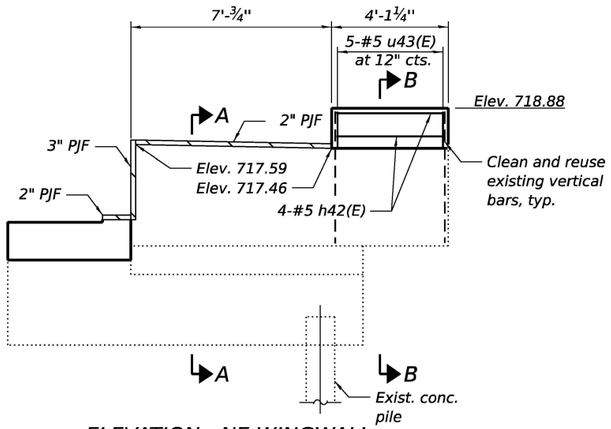

ELEVATION - NE WINGWALL

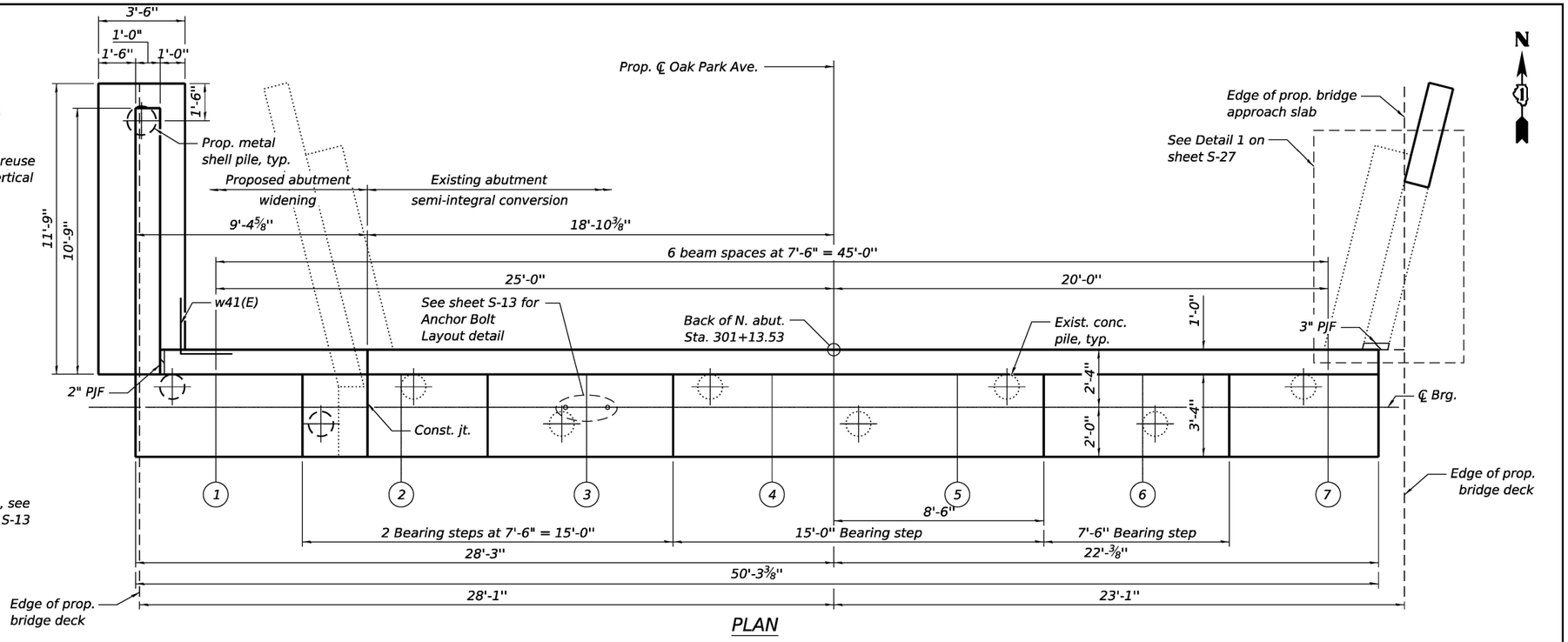

PLAN

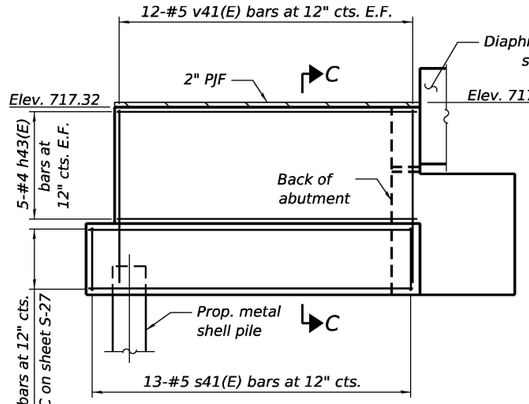

ELEVATION - NW WINGWALL

Beam No.	Brg. Seat Elevation	Step "T"
1	715.16	
2	715.28	1 3/8
3	715.35	0 7/8
4	715.42	0 7/8
5	715.42	-
6	715.33	1 1/8
7	715.26	0 7/8

PILE DATA

Type: 14" Metal Shell x 0.250" w/ Pile Shoes

For North Abutment
Nominal Required Bearing: 330 kips
Factored Resistance Available: 182 kips
Est. Length: 38 ft
No. Production Piles: 1
No. Test Piles: 1

For NW Wingwall
Nominal Required Bearing: 297 kips
Factored Resistance Available: 163 kips
Est. Length: 33 ft
No. Production Piles: 1

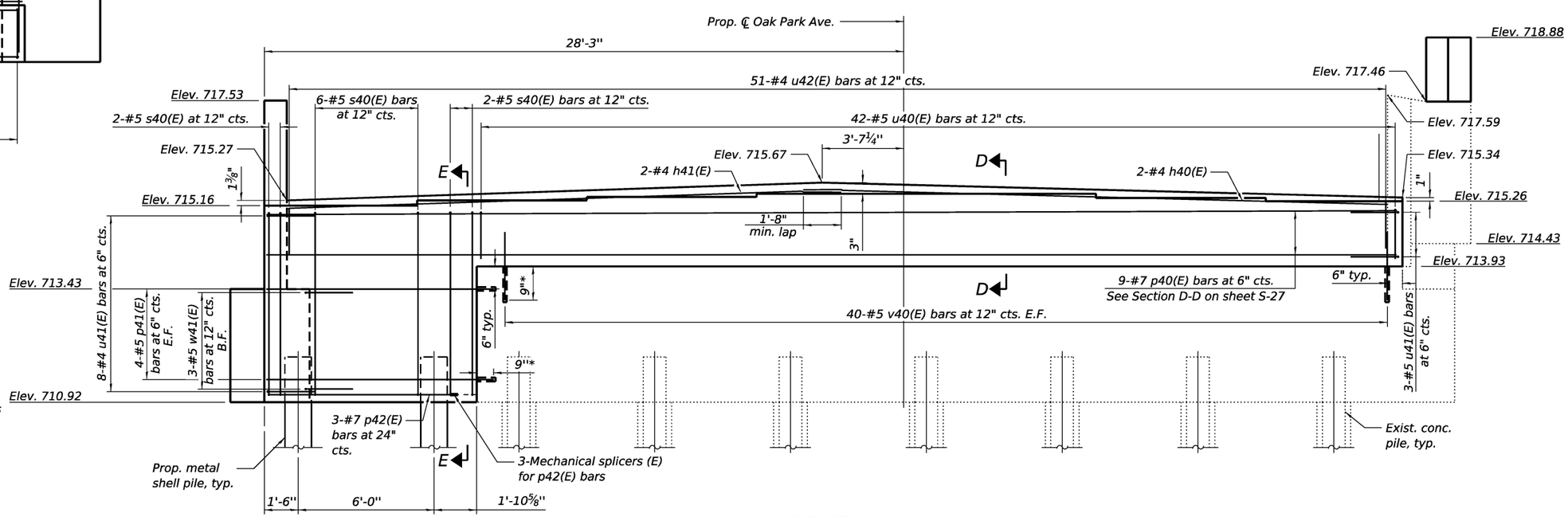

ELEVATION

(Looking North)

** Epoxy grout bars in 9" embedment according to Section 584 of Standard Specifications. Cost included with Reinforcement Bars, Epoxy Coated, typ.*

Notes:
Existing reinforcement at West edge of exist. abut. shall be cleaned, straightened, and incorporated into the new construction. Cost included with Concrete Removal.
See Sections A-A through E-E on sheet S-27 of S-36.

MODEL: North Abutment[Sheet]
FILE NAME: c:\pwworking\primera\pwprod\kludzia\dms61751\D162W20-North Abutment.dgn

Ardmore Roderick

USER NAME = kingaludzia	DESIGNED - KL	REVISED -	
	DRAWN - KL	REVISED -	
	CHECKED - STB	REVISED -	
PLOT DATE = 5/6/2026	DATE - 5/6/2026	REVISED -	

STATE OF ILLINOIS
DEPARTMENT OF TRANSPORTATION

NORTH ABUTMENT
STRUCTURE NO. 016-0927
SHEET S-26 OF S-36 SHEETS

F.A.I RTE.	SECTION	COUNTY	TOTAL SHEETS	SHEET NO.
80	FAI 80 23 Bridge Replacement 2	COOK	158	101
		CONTRACT NO. 62W20		
	ILLINOIS	FED. AID PROJECT		

Notes:
Existing reinforcement shall be cleaned, straightened, and incorporated into the new construction. Cost included with Concrete Removal.

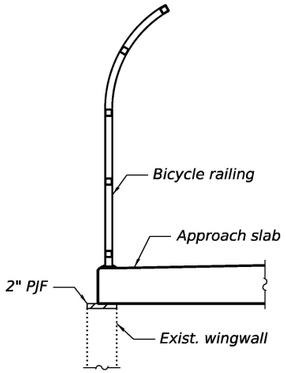

SECTION A-A

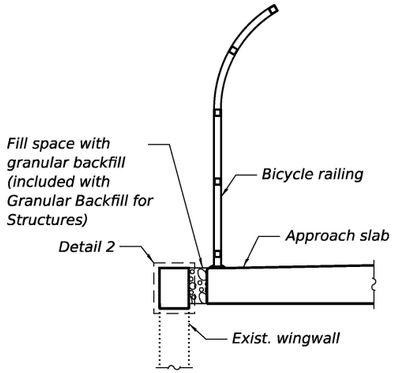

SECTION B-B

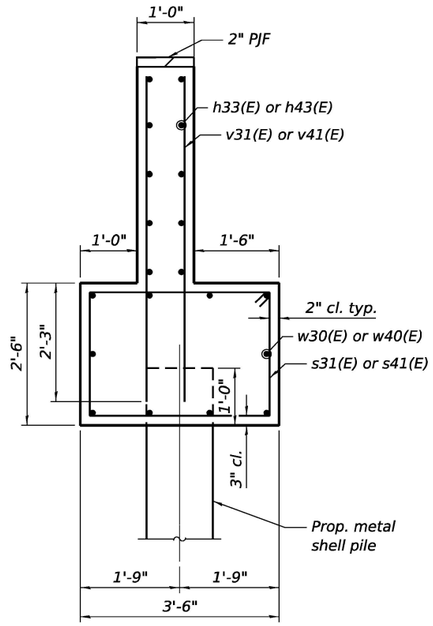

SECTION C-C

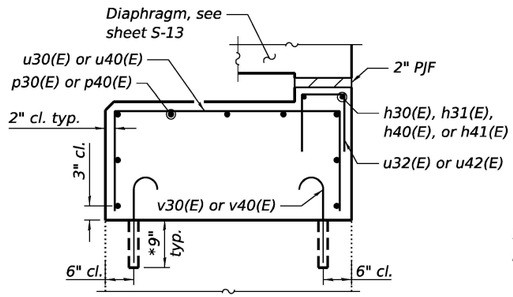

SECTION D-D

* Epoxy grout bars in 9" embedment according to Section 584 of the Standard Specifications. Cost included with Reinforcement Bars, Epoxy Coated.

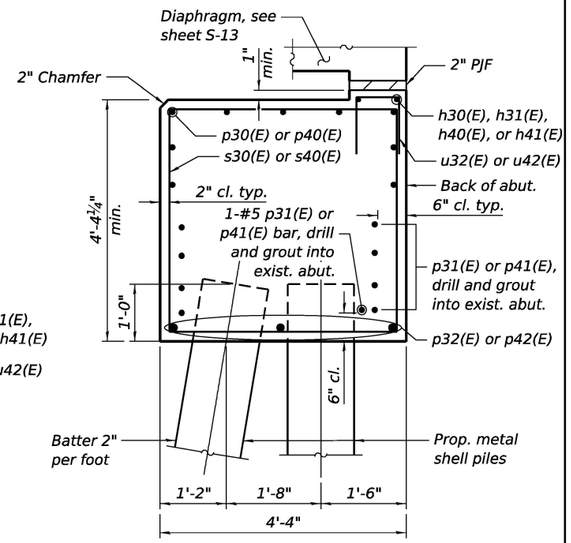

SECTION E-E

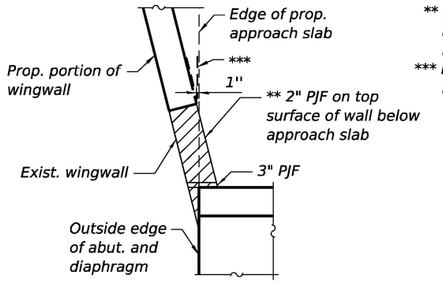

DETAIL 1

** 2" PJF (per Article 1051.09 of Standard Specifications) bonded to the wingwall with a suitable adhesive as recommended by the supplier.
*** Install geotextile fabric at 1" opening. Extend 1'-6" beyond opening. Cost included with Concrete Structures.

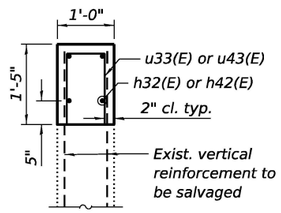

DETAIL 2

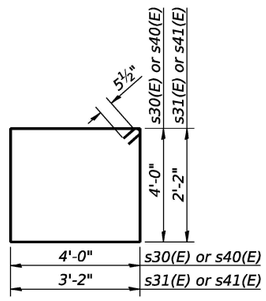

BARS s30(E), s31(E), s40(E), & s41(E)

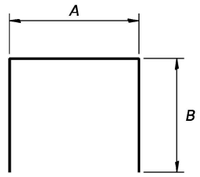

Bar	A	B
u30(E) & u40(E)	4'-0"	1'-1"
u31(E) & u41(E)	4'-0"	2'-1"
u32(E) & u42(E)	8"	1'-0"
u33(E) & u43(E)	8"	1'-2"

BARS u30(E) THRU u33(E) & u40(E) THRU u43(E)

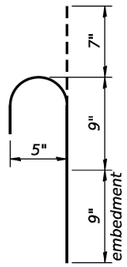

BAR v30(E) & v40(E)

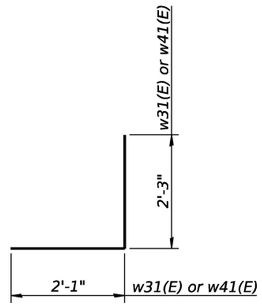

BARS w31(E) & w41(E)

S. ABUT. BILL OF MATERIAL

Bar	No.	Size	Length	Shape
h30(E)	2	#4	22'-9"	
h31(E)	2	#4	29'-0"	
h32(E)	4	#5	3'-9"	
h33(E)	10	#4	10'-5"	
p30(E)	9	#7	49'-11"	
p31(E)	9	#5	10'-0"	
p32(E)	3	#7	8'-2"	
s30(E)	10	#5	16'-11"	
s31(E)	13	#5	11'-7"	
u30(E)	42	#5	6'-2"	
u31(E)	11	#5	8'-2"	
u32(E)	51	#4	2'-8"	
u33(E)	5	#5	3'-0"	
v30(E)	80	#5	2'-1"	
v31(E)	24	#5	6'-3"	
w30(E)	10	#5	11'-5"	
w31(E)	3	#5	4'-4"	
Structure Excavation		Cu. Yd.	107.5	
Concrete Structures		Cu. Yd.	23.3	
Reinforcement Bars, Epoxy Coated		Pound	2,490	
Furnishing Metal Shell Piles 14" X 0.250"		Foot	54	
Pile Shoes		Each	3	
Driving Piles		Foot	54	
Test Pile, Metal Shells		Each	1	

N. ABUT. BILL OF MATERIAL

Bar	No.	Size	Length	Shape
h40(E)	2	#4	22'-9"	
h41(E)	2	#4	29'-0"	
h42(E)	4	#5	3'-9"	
h43(E)	10	#4	10'-5"	
p40(E)	9	#7	49'-11"	
p41(E)	9	#5	10'-0"	
p42(E)	3	#7	8'-2"	
s40(E)	10	#5	16'-11"	
s41(E)	13	#5	11'-7"	
u40(E)	42	#5	6'-2"	
u41(E)	11	#5	8'-2"	
u42(E)	51	#4	2'-8"	
u43(E)	5	#5	3'-0"	
v40(E)	80	#5	2'-1"	
v41(E)	24	#5	6'-3"	
w40(E)	10	#5	11'-5"	
w41(E)	3	#5	4'-4"	
Structure Excavation		Cu. Yd.	105.4	
Concrete Structures		Cu. Yd.	23.3	
Reinforcement Bars, Epoxy Coated		Pound	2,490	
Furnishing Metal Shell Piles 14" X 0.250"		Foot	71	
Pile Shoes		Each	3	
Driving Piles		Foot	71	
Test Pile, Metal Shells		Each	1	

MODEL: Abutment Details [Sheet]
FILE NAME: c:\pwworking\primera\pwprod\kludzia\dms617511D162W20-Abutment Details.dgn

Ardmore Roderick

USER NAME = kingaludzia	DESIGNED - KL	REVISED -	
	DRAWN - KL	REVISED -	
	CHECKED - STB	REVISED -	
PLOT DATE = 5/6/2026	DATE - 5/6/2026	REVISED -	

STATE OF ILLINOIS
DEPARTMENT OF TRANSPORTATION

ABUTMENT DETAILS
STRUCTURE NO. 016-0927
SHEET S-27 OF S-36 SHEETS

F.A.I RTE.	SECTION	COUNTY	TOTAL SHEETS	SHEET NO.
80	FAI 80 23 Bridge Replacement 2	COOK	158	102
		CONTRACT NO. 62W20		
		ILLINOIS	FED. AID PROJECT	

EXISTING BEAM SEAT ELEVATIONS

Location	Elevation A	Elevation B
Pier 1	714.800	714.935
Pier 2	715.023	715.160
Pier 3	714.655	714.790

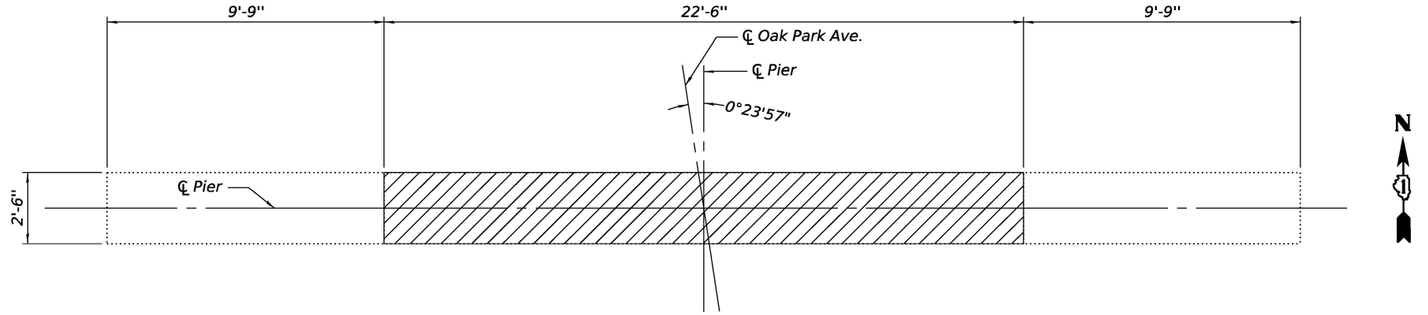

TOP PLAN

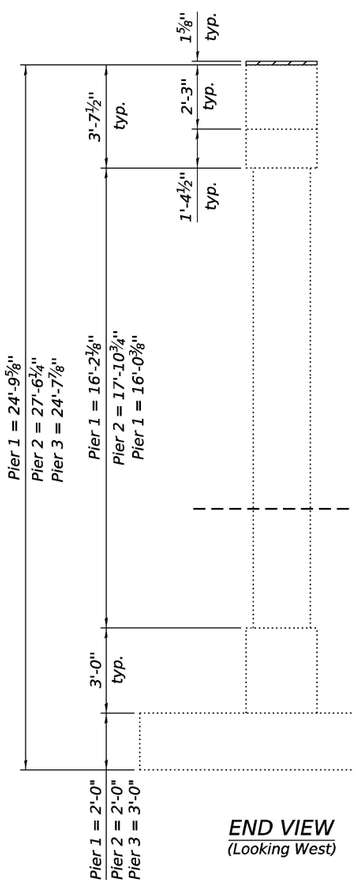

END VIEW
(Looking West)

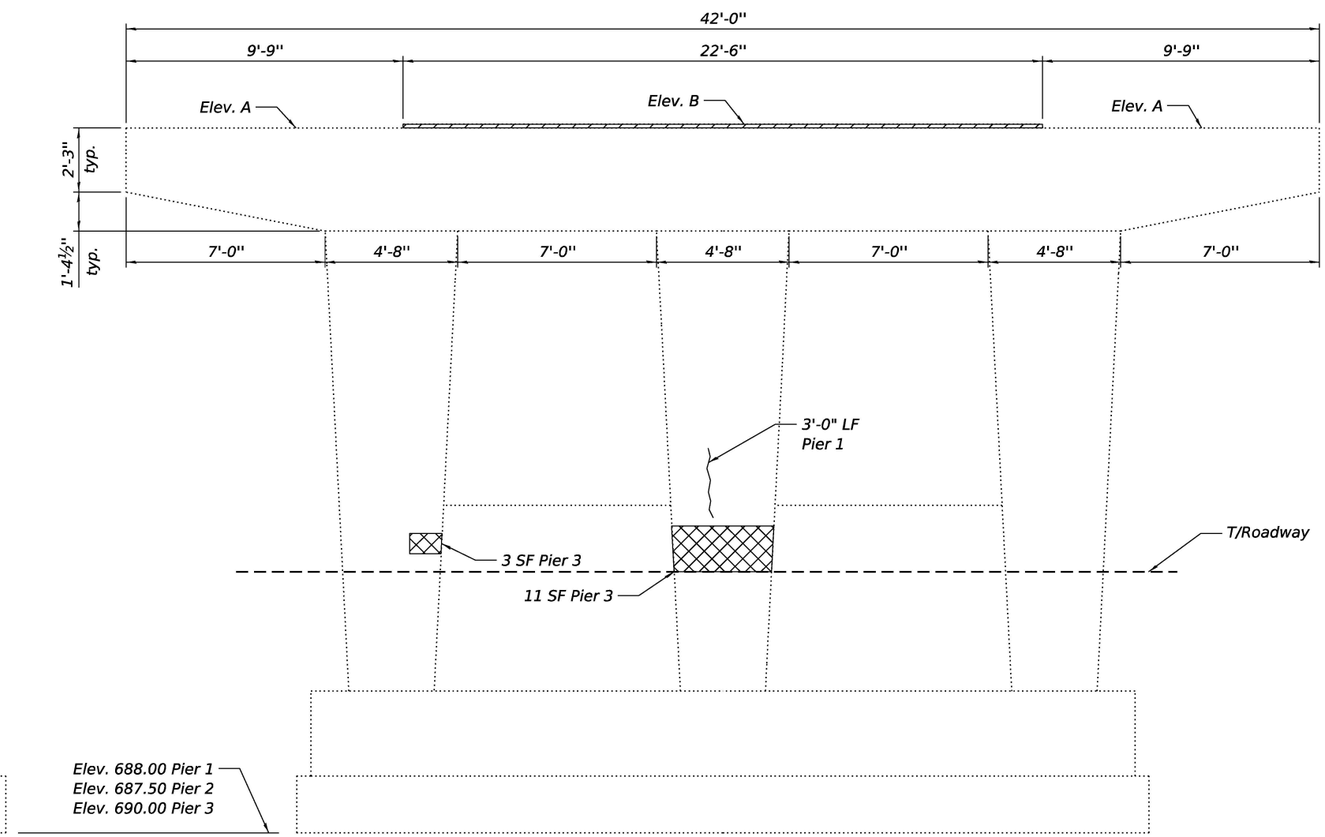

ELEVATION
(Looking North)

Notes:
Existing bearings to be removed. Burn existing anchor bolts flush with concrete surface after concrete removal. Grind exsiting anchor bolt smooth and seal with epoxy. Cost included with Removal of Existing Superstructures.

PIER 1 BILL OF MATERIAL

Item	Unit	Quantity
Concrete Removal	Cu. Yd.	0.3
Epoxy Crack Injection	Foot	3

PIER 2 BILL OF MATERIAL

Item	Unit	Quantity
Concrete Removal	Cu. Yd.	0.3

PIER 3 BILL OF MATERIAL

Item	Unit	Quantity
Concrete Removal	Cu. Yd.	0.3
Structural Repair of Concrete (Depth Equal to or Less Than 5 Inches)	Sq. Ft.	14

LEGEND

Concrete Removal

Epoxy Crack Injection

Structural Repair of Concrete (Depth Equal to or Less than 5 Inches)

MODEL: Pier Removal[Sheet]
FILE NAME: c:\pwworking\primera\pwprod\kludzia\dms61751\D162W20-Pier Removal.dgn

Ardmore Roderick

USER NAME = nickbrustin	DESIGNED - NMB	REVISED -	
	DRAWN - NMB	REVISED -	
	CHECKED - STB	REVISED -	
PLOT DATE = 5/6/2026	DATE - 5/6/2026	REVISED -	

STATE OF ILLINOIS
DEPARTMENT OF TRANSPORTATION

PIER REMOVAL AND REPAIR DETAILS
STRUCTURE NO. 016-0927

SHEET S-28 OF S-36 SHEETS

F.A.I RTE.	SECTION	COUNTY	TOTAL SHEETS	SHEET NO.
80	FAI 80 23 Bridge Replacement 2	COOK	158	103
		CONTRACT NO. 62W20		
		ILLINOIS FED. AID PROJECT		

PIER 1 BRG. SEAT ELEVATIONS

Beam No.	Brg. Seat Elev.	Step "T"
1	715.72	
2	715.84	1 1/2"
3	715.98	1 5/8"
4	716.05	7/8"
5	716.05	0"
6	715.94	1 3/8"
7	715.80	1 5/8"

PIER 3 BRG. SEAT ELEVATIONS

Beam No.	Brg. Seat Elev.	Step "T"
1	715.70	
2	715.82	1 1/2"
3	715.96	1 5/8"
4	716.03	7/8"
5	716.03	0"
6	715.92	1 3/8"
7	715.78	1 5/8"

Notes:
For Sections A-A, B-B, C-C and D-D and E-E see sheet S-31 of S-36.
Space reinforcement in cap to miss anchor bolts.
For details of piles, see sheet S-33 of S-36.

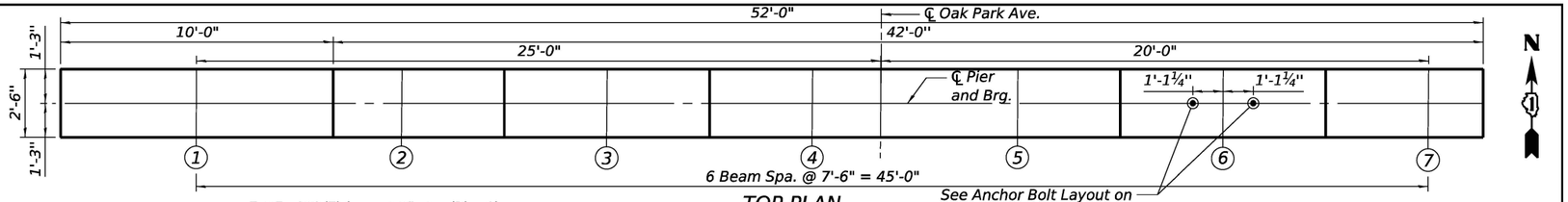

TOP PLAN

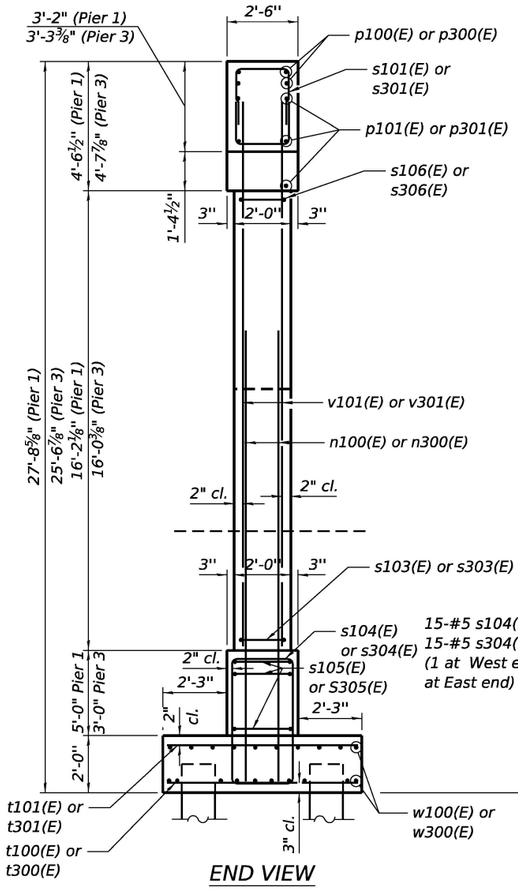

END VIEW

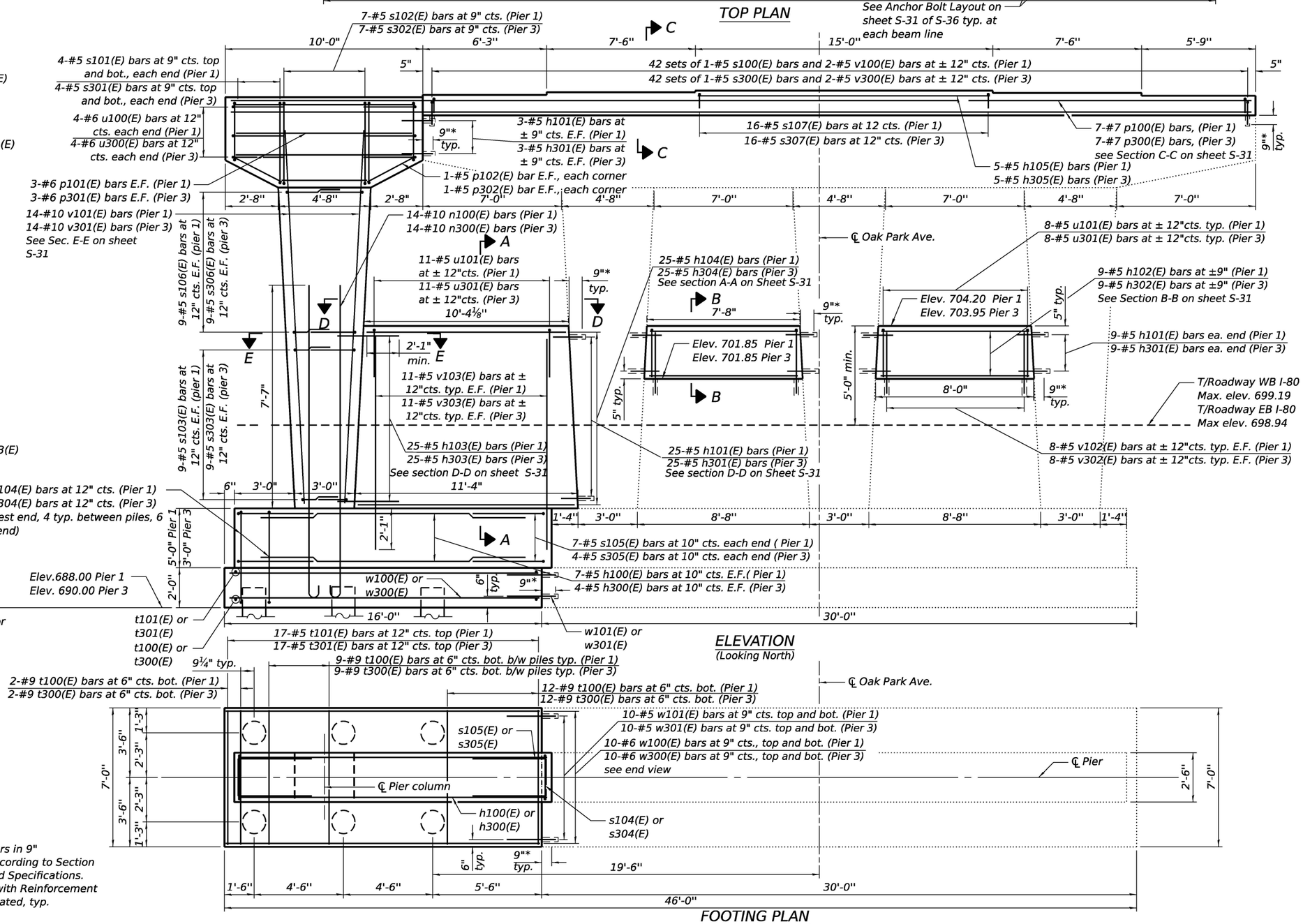

ELEVATION
(Looking North)

FOOTING PLAN

PIER 1 PILE DATA

Type: 14" Metal shell x 0.25" w/pile shoes
Nominal Required Bearing: 228 kips
Factored Resistance Available: 143 kips
Est. Length: 32 feet
No. Production Piles: 5
No. Test Piles: 1

PIER 3 PILE DATA

Type: 14" Metal shell x 0.25" w/pile shoes
Nominal Required Bearing: 263 kips
Factored Resistance Available: 145 kips
Est. Length: 27 feet
No. Production Piles: 5
No. Test Piles: 1

* Epoxy grout bars in 9" embedment according to Section 584 of Standard Specifications. Cost included with Reinforcement Bars, Epoxy Coated, typ.

MODEL: Piers 1 and 3[Sheet]
FILE NAME: c:\pwworking\pt\mera\pwprod\nrustlin\dms817751\D1\62W20-Piers 1 and 3.dgn

Ardmore Roderick

USER NAME = kingaludzia	DESIGNED - NMB	REVISED -
	DRAWN - NMB	REVISED -
	CHECKED - STB	REVISED -
PLOT DATE = 5/6/2026	DATE - 5/6/2026	REVISED -

STATE OF ILLINOIS
DEPARTMENT OF TRANSPORTATION

PIERS 1 AND 3
STRUCTURE NO. 016-0927
SHEET S-29 OF S-36 SHEETS

F.A.I RTE.	SECTION	COUNTY	TOTAL SHEETS	SHEET NO.
80	FAI 80 23 Bridge Replacement 2	COOK	158	104
		CONTRACT NO. 62W20		
	ILLINOIS	FED. AID PROJECT		

PIER 2 BRG. SEAT ELEVATIONS

Beam No.	Brg. Seat Elev.	Step "T"
1	716.12	1 1/2"
2	716.24	1 5/8"
3	716.38	0 7/8"
4	716.45	-
5	716.45	1 3/8"
6	716.34	1 5/8"
7	716.20	

*Epoxy grout bar in 9"embedment according to Section 584 of Standard Specifications. Cost included with Reinforcement Bars, Epoxy Coated, typ.

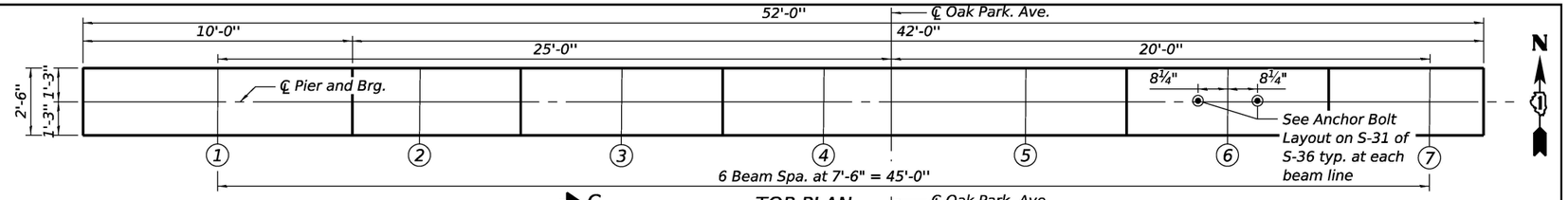

TOP PLAN

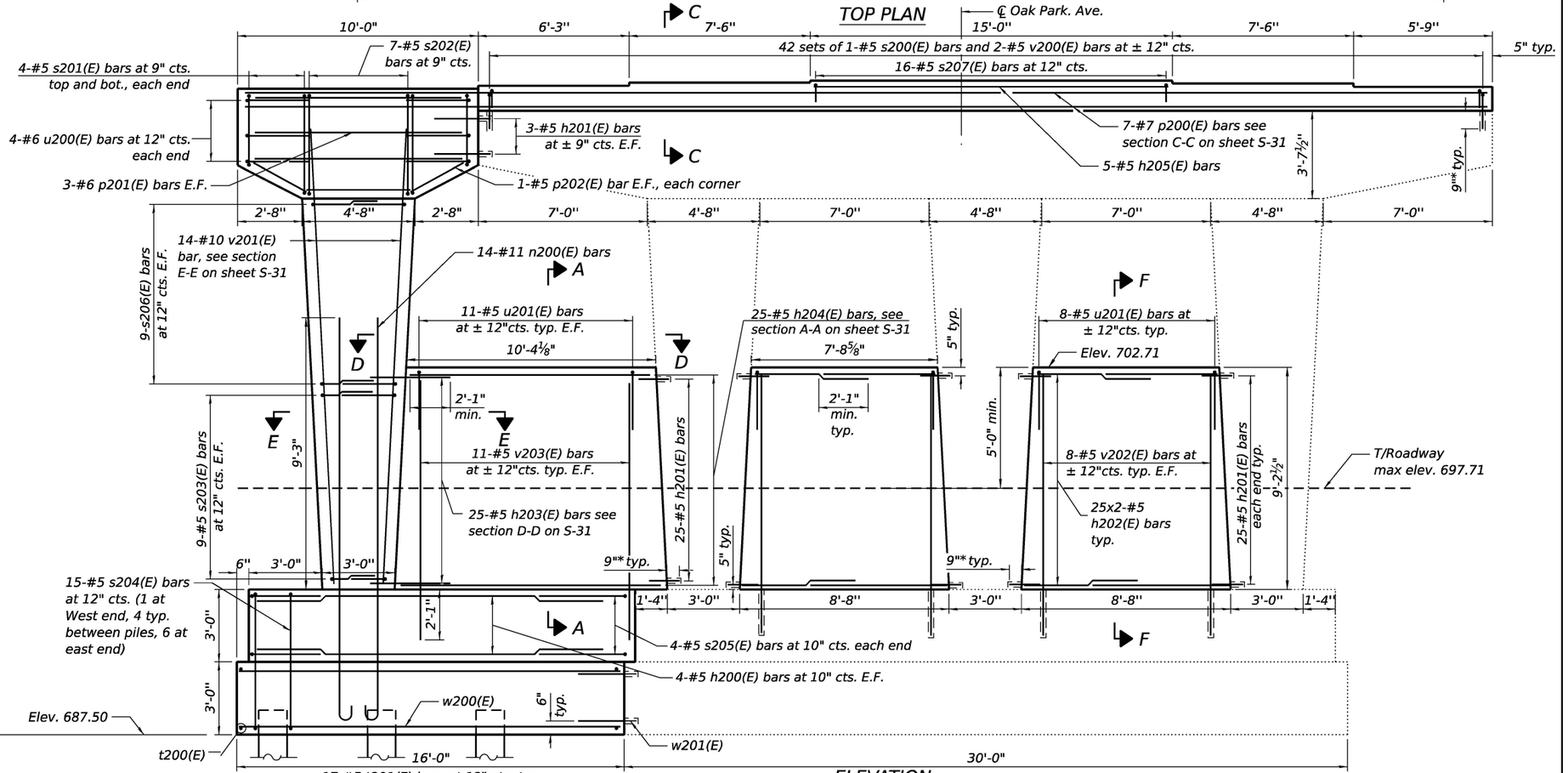

END VIEW

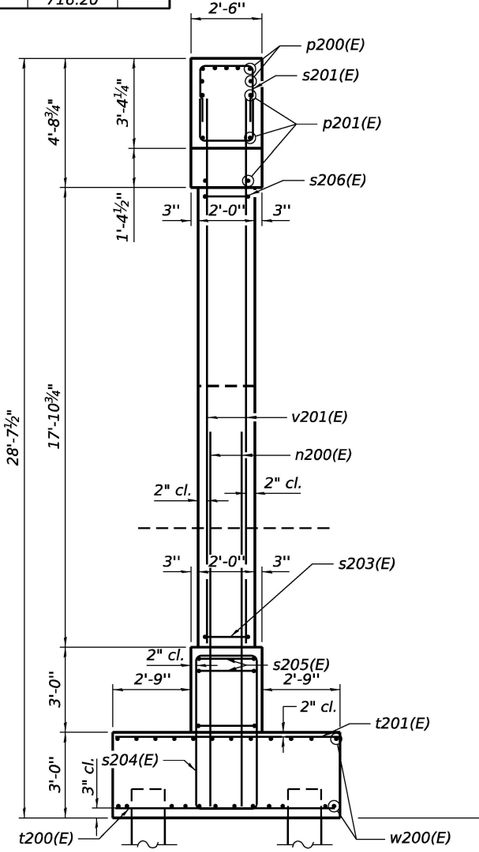

PIER 2 PILE DATA

Type: 14" Metal shell x 0.25" w/pile shoes
Nominal Required Bearing: 214 kips
Factored Resistance Available: 155 kips
Est. Length: 35
No. Production Piles: 5
No. Test Piles: 1

Notes:
For Sections A-A, C-C, D-D and E-E see sheet S-31 of S-36.
Space reinforcement in cap to miss anchor bolts.
For details of piles, see sheet S-33 of S-36.

SECTION F-F

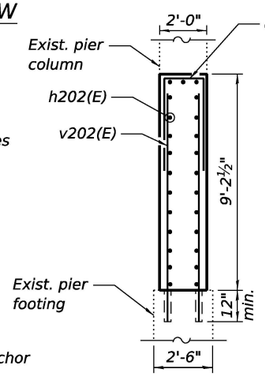

FOOTING PLAN

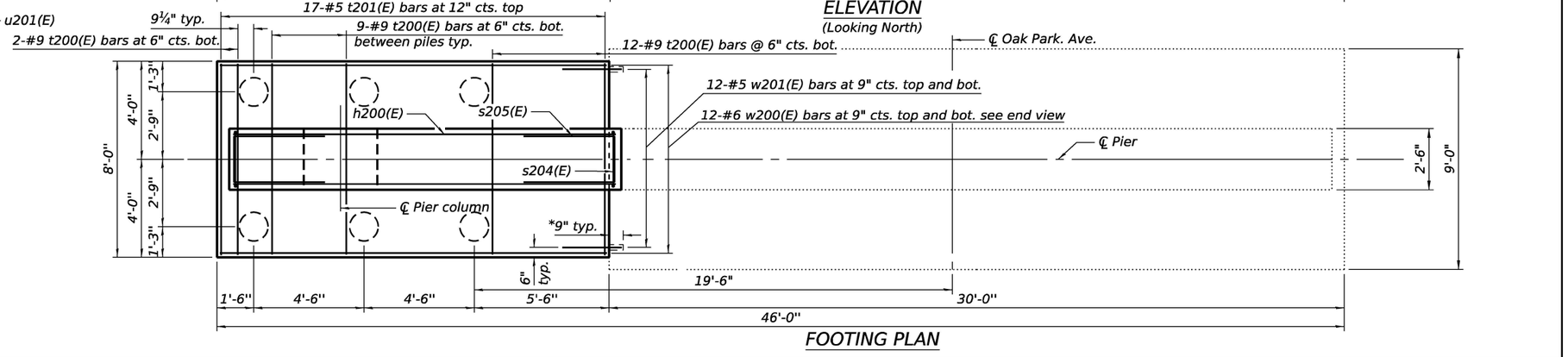

ELEVATION
(Looking North)

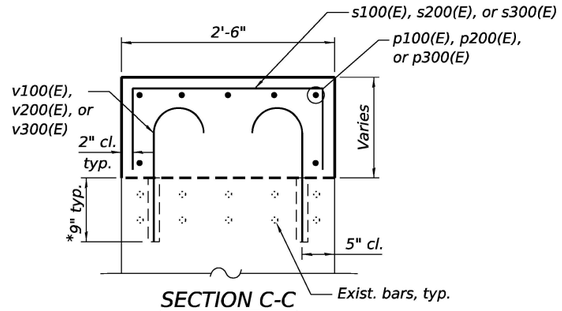

SECTION C-C

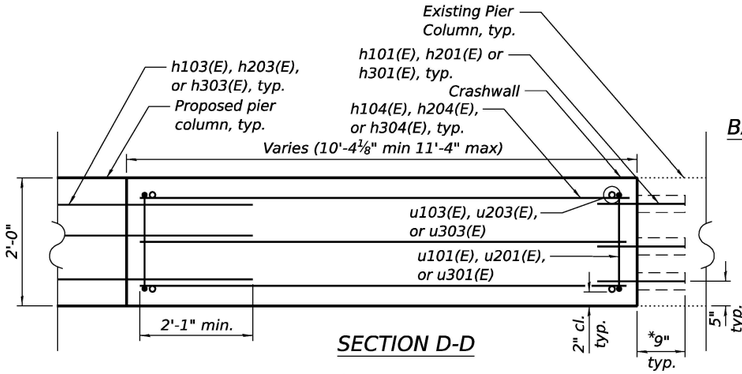

SECTION D-D

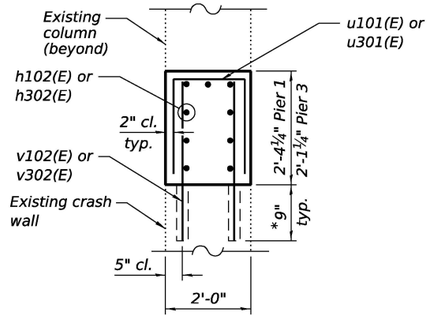

SECTION B-B

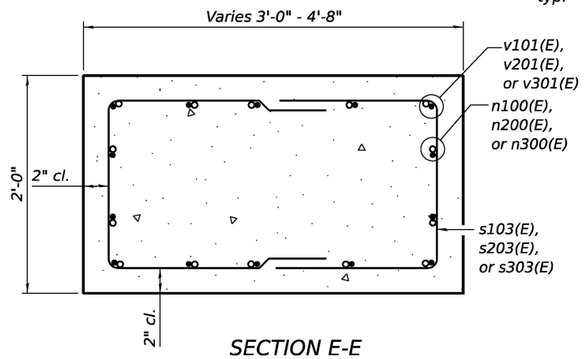

SECTION E-E

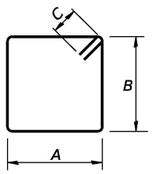

Bar	A	B	C
s102(E)	2'-2"	4'-2"	5½"
s104(E)	2'-2"	6'-7"	5½"
s202(E)	2'-2"	4'-4"	5½"
s204(E)	2'-2"	5'-7"	5½"
s302(E)	2'-2"	4'-3"	5½"
s304(E)	2'-2"	4'-7"	5½"

BARS s102(E) or s104(E)
BARS s202(E) or s204(E)
BARS s302(E) or s304(E)
DIMENSIONS

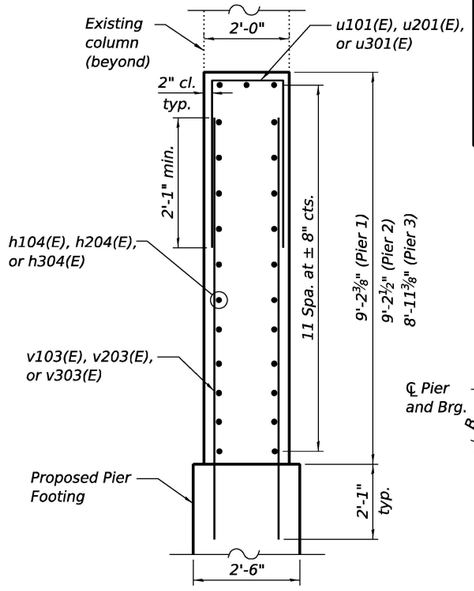

SECTION A-A

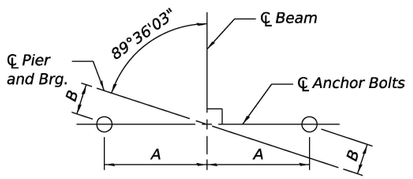

ANCHOR BOLT LAYOUT

Location	A	B
Pier 1	1'-1¼"	⅛"
Pier 2	8¼"	7/16"
Pier 3	1'-1¼"	⅛"

Bar	A	B
s100(E)	2'-2"	9"
s101(E)	2'-2"	2'-10"
s103(E)	1'-8"	2'-8"
S105(E)	2'-2"	2'-1"
s106(E)	1'-8"	3'-6"
s107(E)	2'-2"	1'-0"
s200(E)	2'-2"	10"
s201(E)	2'-2"	2'-10"
s203(E)	1'-8"	2'-8"
s205(E)	2'-2"	2'-1"
s206(E)	1'-8"	3'-6"
s207(E)	2'-2"	1'-2"
s300(E)	2'-2"	11"
s301(E)	2'-2"	2'-10"
s303(E)	1'-8"	2'-8"
s305(E)	2'-2"	2'-1"
s306(E)	1'-8"	3'-6"
s307(E)	2'-2"	1'-1"

BARS s100(E), s101(E), s103(E)
s105(E), s106(E), or s107(E)
BARS s200(E), s201(E), s203(E)
s205(E), s206(E), or s207(E)
Bars s300(E), s301(E), s303(E)
s305(E), s306(E), or s307(E)
DIMENSIONS

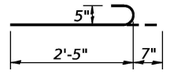

BARS h101(E), h201(E), or h301(E)



Bar	A	B
t100(E)	6'-8"	1'-7"
t200(E)	7'-8"	1'-7"
t300(E)	6'-8"	1'-7"

BARS t100(E), t200(E), or t300(E)

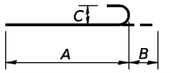

Bar	A	B	C
n100(E)	14'-4"	1'-5"	1'-1¼"
n200(E)	15'-0"	1'-7"	1'-2¾"
n300(E)	12'-4"	1'-5"	1'-1¼"

BARS n100(E), n200(E), or n300(E)
DIMENSIONS

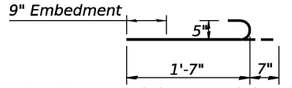

BARS v100(E), v200(E), or v300(E)
DIMENSIONS

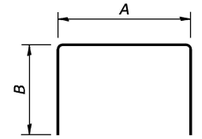

Bar	A	B
u100(E)	2'-2"	2'-1"
u101(E)	1'-8"	1'-10"
u200(E)	2'-2"	2'-1"
u201(E)	1'-8"	1'-10"
u300(E)	2'-2"	2'-1"
u301(E)	1'-8"	1'-10"

BARS u100(E), u101(E), u200(E), u201(E), u300(E), or u201(E)
DIMENSIONS

PIER 1 BILL OF MATERIAL

Bar	No.	Size	Length	Shape
h100(E)	14	#5	15'-8"	
h101(E)	67	#5	3'-0"	
h102(E)	18	#5	7'-4"	
h103(E)	25	#5	4'-9"	
h104(E)	25	#5	10'-0"	
h105(E)	5	#5	14'-8"	
n100(E)	14	#10	15'-9"	
p100(E)	7	#7	51'-8"	
p101(E)	6	#6	9'-8"	
p102(E)	4	#5	2'-9"	
s100(E)	42	#5	3'-8"	
s101(E)	16	#5	7'-10"	
s102(E)	7	#5	13'-7"	
s103(E)	18	#5	7'-0"	
s104(E)	15	#5	18'-5"	
s105(E)	14	#5	6'-4"	
s106(E)	18	#5	8'-8"	
s107(E)	16	#5	4'-2"	
t100(E)	32	#9	9'-10"	
t101(E)	17	#5	6'-8"	
u100(E)	8	#6	6'-4"	
u101(E)	27	#5	5'-4"	
w100(E)	20	#6	15'-8"	
w101(E)	20	#6	3'-0"	
v100(E)	84	#5	2'-2"	
v101(E)	14	#10	19'-0"	
v102(E)	32	#5	2'-11"	
v103(E)	22	#5	11'-2"	
Structure Excavation			Cu. Yd.	82.1
Concrete Structures			Cu. Yd.	38.8
Reinforcement Bars, Epoxy Coated			Pound	7,210
Furnishing Metal Shell Piles 14" x 0.250"			Foot	160
Driving Piles			Foot	160
Test Pile Metal Shells			Each	1
Pile Shoes			Each	6

PIER 2 BILL OF MATERIAL

Bar	No.	Size	Length	Shape
h200(E)	8	#5	15'-8"	
h201(E)	131	#5	3'-0"	
h202(E)	100	#5	6'-3"	
h203(E)	25	#5	4'-9"	
h204(E)	25	#5	10'-0"	
h205(E)	5	#5	14'-8"	
n200(E)	14	#11	16'-7"	
p200(E)	7	#7	51'-8"	
p201(E)	6	#6	9'-8"	
p202(E)	4	#5	2'-9"	
s200(E)	42	#5	4'-0"	
s201(E)	16	#5	7'-10"	
s202(E)	7	#5	13'-11"	
s203(E)	18	#5	7'-0"	
s204(E)	15	#5	16'-5"	
s205(E)	8	#5	6'-4"	
s206(E)	18	#5	8'-8"	
s207(E)	16	#5	4'-6"	
t200(E)	32	#9	10'-10"	
t201(E)	17	#5	7'-8"	
u200(E)	8	#6	6'-4"	
u201(E)	27	#5	5'-4"	
w200(E)	24	#6	15'-8"	
w201(E)	24	#6	3'-0"	
v200(E)	84	#5	2'-2"	
v201(E)	14	#10	20'-8"	
v202(E)	32	#5	9'-9"	
v203(E)	22	#5	11'-2"	
Structure Excavation			Cu. Yd.	81.7
Concrete Structures			Cu. Yd.	51.6
Reinforcement Bars, Epoxy Coated			Pound	8,460
Furnishing Metal Shell Piles 14" x 0.250"			Foot	175
Driving Piles			Foot	175
Test Pile Metal Shells			Each	1
Pile Shoes			Each	6

PIER 3 BILL OF MATERIAL

Bar	No.	Size	Length	Shape
h300(E)	8	#5	15'-8"	
h301(E)	67	#5	3'-0"	
h302(E)	18	#5	7'-4"	
h303(E)	25	#5	4'-9"	
h304(E)	25	#5	10'-0"	
h305(E)	5	#5	14'-8"	
n300(E)	14	#10	13'-9"	
p300(E)	7	#7	51'-8"	
p301(E)	6	#6	9'-8"	
p302(E)	4	#5	2'-9"	
s300(E)	42	#5	3'-10"	
s301(E)	16	#5	7'-10"	
s302(E)	7	#5	13'-9"	
s303(E)	18	#5	7'-0"	
s304(E)	15	#5	14'-5"	
s305(E)	8	#5	6'-4"	
s306(E)	18	#5	8'-8"	
s307(E)	16	#5	4'-4"	
t300(E)	32	#9	9'-10"	
t301(E)	17	#5	6'-8"	
u300(E)	8	#6	6'-4"	
u301(E)	27	#5	5'-4"	
w300(E)	20	#6	15'-8"	
w301(E)	20	#6	3'-0"	
v300(E)	84	#5	2'-2"	
v301(E)	14	#10	18'-10"	
v302(E)	32	#5	2'-8"	
v303(E)	22	#5	10'-11"	
Structure Excavation			Cu. Yd.	65.6
Concrete Structures			Cu. Yd.	35.9
Reinforcement Bars, Epoxy Coated			Pound	6,890
Furnishing Metal Shell Piles 14" x 0.250"			Foot	135
Driving Piles			Foot	135
Test Pile Metal Shells			Each	1
Pile Shoes			Each	6

*Epoxy grout bars 9" embedment according to Section 584 of Standard Specifications. Cost included with Reinforcement Bars, Epoxy Coated, typ.

MODEL: Pier Details [Sheet]
FILE NAME: c:\pwworking\ptmeral\pwprod\kudzia\dms6175\1\D162W20-Pier Details.dgn

Ardmore Roderick

USER NAME = kingaludzia	DESIGNED - NMB	REVISED -
	DRAWN - NMB	REVISED -
	CHECKED - STB	REVISED -
PLOT DATE = 5/6/2026	DATE - 5/6/2026	REVISED -

STATE OF ILLINOIS
DEPARTMENT OF TRANSPORTATION

PIER DETAILS
STRUCTURE NO. 016-0927
SHEET S-31 OF S-36 SHEETS

F.A.I RTE.	SECTION	COUNTY	TOTAL SHEETS	SHEET NO.
80	FAI 80 23 Bridge Replacement 2	COOK	158	106
		CONTRACT NO. 62W20		
		ILLINOIS FED. AID PROJECT		

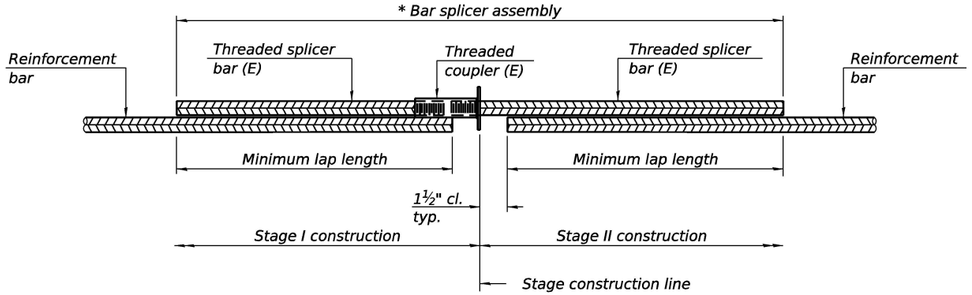

STANDARD BAR SPLICER ASSEMBLY PLAN

Only bar splicer assemblies as presented on the approved QPL list may be used.

Threaded splicer bar length = min. lap length + 1½" + thread length

* Epoxy not required on Bar Splicer Assembly components used in conjunction with black bars.

Location	Bar size	No. assemblies required	Minimum lap length

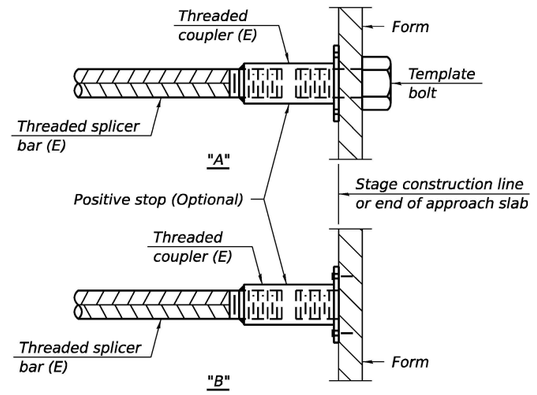

INSTALLATION AND SETTING METHODS

"A" : Set bar splicer assembly by means of a template bolt.
"B" : Set bar splicer assembly by nailing to wood forms or cementing to steel forms.
(E) : Indicates epoxy coating.

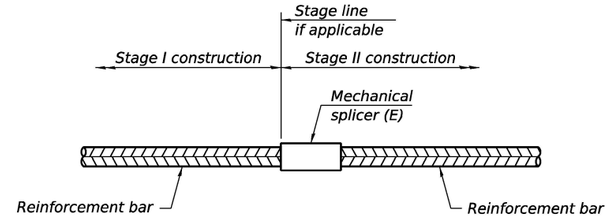

STANDARD MECHANICAL SPLICER

Location	Bar size	No. assemblies required
South Abutment	#7	3
North Abutment	#7	3

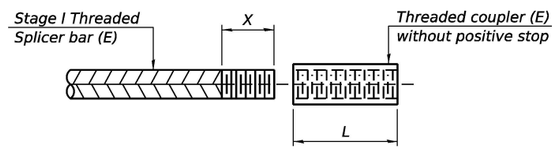

THREADING OF ASSEMBLIES

The threaded length "X" shall be no more than L/2. The bar should be tightened until 0-1 thread(s) is/are exposed.

Notes:
Splicer bars shall be deformed with threaded ends and have a minimum 60 ksi yield strength.
All reinforcement shall be lapped and tied to the splicer bars.
Bar splicer assemblies shall be epoxy coated according to the requirements for reinforcement bars. See Section 508 of the Standard Specifications.
See approved list of bar splicer assemblies and mechanical splicers for alternatives.

BSD-1

4-4-2025

Ardmore Roderick

USER NAME = nickbrustin	DESIGNED - KL	REVISED -
	DRAWN - MS	REVISED -
	CHECKED - STB	REVISED -
PLOT DATE = 5/6/2026	DATE - 5/6/2026	REVISED -

STATE OF ILLINOIS
DEPARTMENT OF TRANSPORTATION

BAR SPLICER ASSEMBLY AND MECHANICAL SPLICER DETAILS
STRUCTURE NO. 016-0927
SHEET S-32 OF S-36 SHEETS

F.A.I RTE.	SECTION	COUNTY	TOTAL SHEETS	SHEET NO.
80	FAI 80 23 Bridge Replacement 2	COOK	158	107
		CONTRACT NO. 62W20		
	ILLINOIS FED. AID PROJECT			

MODEL: Bar Splicer Assembly and Mechanical Splicer Details [Sheet]
FILE NAME: c:\pwworking\primeral\pwprod\kludzia\dms617511D162W20-Bar Splicer Assembly and Mechanical Splicer Details.dgn

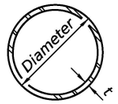

METAL SHELL PILE TABLE

Designation and outside diameter	Wall thickness t	Weight per foot (Lbs./ft.)	Inside volume (yd.³/ft.)
PP12	0.250"	31.40	0.0267
PP14	0.250"	36.75	0.0368
PP14	0.312"	45.65	0.0361
PP16	0.312"	52.32	0.0478
PP16	0.375"	62.64	0.0470

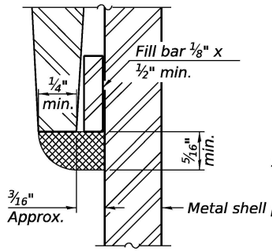

DETAIL A

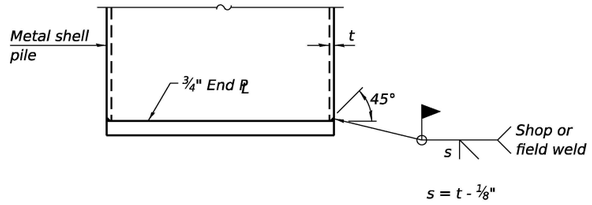

$s = t - \frac{1}{8}$"

END PLATE ATTACHMENT

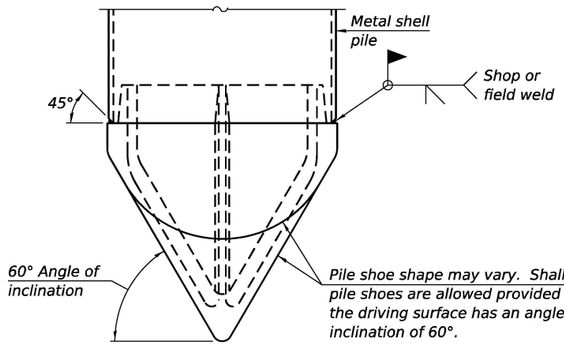

PILE SHOE ATTACHMENT

(When called for on the plans, the Contractor shall furnish metal shell pile shoes consisting of a single piece conical pile point as shown. The pile shoes shall be cast in one piece steel according to either ASTM A 148 Grade 80-50 or AASHTO M 103 Grade 65-35 and shall provide full bearing over the full circumference of the metal shell pile. The pile shoe shall have tapered leads to assure proper alignment and fitting and shall be secured to the pile with a circumferential weld).

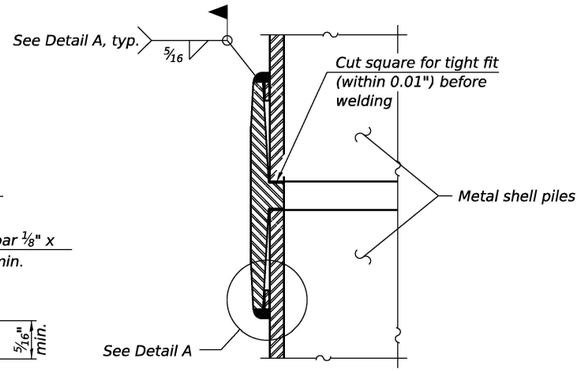

WELDED COMMERCIAL SPLICE

Notes:
The ⅛" x ½" min. fill bar may be constructed of 2 bars with a ⅛" max. gap between them.
Pile segments shall be driven to solid contact with splicer before welding.

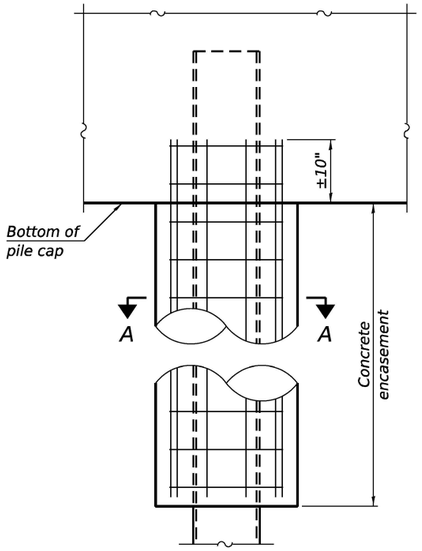

ELEVATION

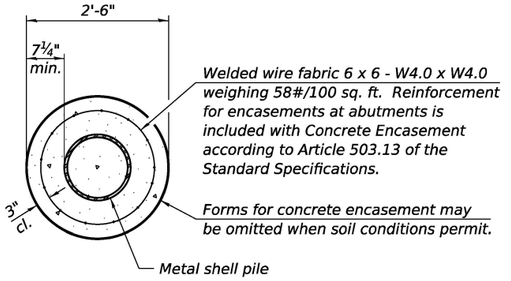

SECTION A-A

INDIVIDUAL PILE CONCRETE ENCASEMENT

(When specified)

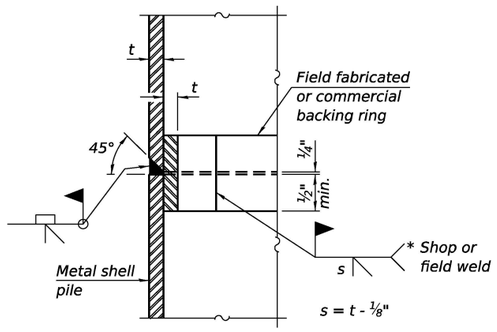

$s = t - \frac{1}{8}$"

COMPLETE PENETRATION WELD SPLICE

* Field fabricated backing ring may be made from pile shell by removing segment to allow reducing circumference and vertically rejoin with partial joint penetration weld.

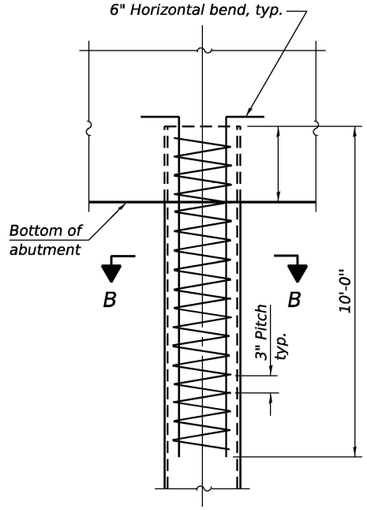

ELEVATION

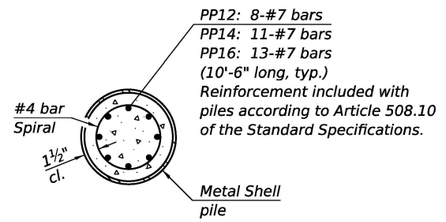

SECTION B-B

REINFORCEMENT AT ABUTMENTS

(Omit when concrete encasement is specified)

Note:
The metal shell piles shall be according to Article 1006.05 of the Standard Specifications.

F-MS 4-4-2025

MODEL: Metal Shell Pile Details [Sheet]
FILE NAME: 401408c:\pwworking\primera\pwprod\kludzia\dms617511D1622W20-Metal Shell Pile Details.dgn

Ardmore Roderick

USER NAME = nickbrustin	DESIGNED - NMB	REVISED -
	DRAWN - NMB	REVISED -
	CHECKED - STB	REVISED -
PLOT DATE = 5/6/2026	DATE - 5/6/2026	REVISED -

STATE OF ILLINOIS
DEPARTMENT OF TRANSPORTATION

METAL SHELL PILE DETAILS
STRUCTURE NO. 016-0927
SHEET S-33 OF S-36 SHEETS

F.A.I RTE.	SECTION	COUNTY	TOTAL SHEETS	SHEET NO.
80	FAI 80 23 Bridge Replacement 2	COOK	158	108
		CONTRACT NO. 62W20		
	ILLINOIS FED. AID PROJECT			

Illinois Department of Transportation
Division of Highways
GSG Consultants, Inc.

SOIL BORING LOG

Date 12/3/24

ROUTE Oak Park Avenue **DESCRIPTION** Bridge Abutment Boring **LOGGED BY** TS

SECTION I-80 at Oak Park Avenue **LOCATION** Oak Park Avenue, **SEC.** 6, **TWP.** 35N, **RNG.** 13E,
Latitude 41.5515147, **Longitude** 87.7835798

COUNTY COOK **DRILLING RIG** Mobile B57 **HAMMER TYPE** AUTO
DRILLING METHOD MUD ROTARY **HAMMER EFF (%)** 92.1

STRUCT. NO. 016-0927
Station 300+00

BORING NO. BSB-1
Station 301+39.39
Offset 15.66ft LT
Ground Surface Elev. 717.79 ft

Surface Water Elev. N/A ft
Stream Bed Elev. N/A ft

Groundwater Elev.:
First Encounter N/A ft
Upon Completion N/A ft
After N/A **Hrs.** N/A ft

DEPTH (ft)	BLOWS (/6")	UCS Qu (tsf)	MOIST (%)	Material
0				10 inches of Asphalt 10 Inches of Concrete 716.96
	20			716.12
	9		13	Brown, Moist FILL: SAND AND GRAVEL
	4			714.29
	3			Brown and Gray, Moist to Very Moist FILL: SILTY CLAY, trace sand and gravel
-5	6 8	6.0 B	17	
	4			
	4 4	5.2 B	17	
	1			
-10	3 3	3.1 B	22	
	3			Sand seam at 12 feet
	3 5	2.9 B	21	
	2			
-15	4 4	3.3 P	20	
	2			
	2 3	2.1 B	21	
	2			
-20	3 4	2.7 B	22	

DEPTH (ft)	BLOWS (/6")	UCS Qu (tsf)	MOIST (%)	Material
	2			Brown and Gray, Moist to Very Moist FILL: SILTY CLAY, trace sand and gravel *(continued)*
	2 50/3"	1.7 B	19	2 inches of Asphalt at 22 feet
	4			
-25	7 8	3.1 B	26	
	691.79			
	5			Very Stiff to Hard Brown, Moist SILTY CLAY, trace gravel (CL/ML)
	7 5	3.1 B	20	
	5			
-30	6 11	7.3 B	19	
	684.29			
	5			Medium Stiff Brown, Very Moist SILTY CLAY, with sand and gravel (CL/ML)
-35	4 7	0.8 P	32	
	679.29			
	3			
-40	4 6	2.7 B	22	

The Unconfined Compressive Strength (UCS) Failure Mode is indicated by (B-Bulge, S-Shear, P-Penetrometer)
The SPT (N value) is the sum of the last two blow values in each sampling zone (AASHTO T206)

BBS, form 137 (Rev. 8-99)

Illinois Department of Transportation
Division of Highways
GSG Consultants, Inc.

SOIL BORING LOG

Date 12/3/24

ROUTE Oak Park Avenue **DESCRIPTION** Bridge Abutment Boring **LOGGED BY** TS

SECTION I-80 at Oak Park Avenue **LOCATION** Oak Park Avenue, **SEC.** 6, **TWP.** 35N, **RNG.** 13E,
Latitude 41.5515147, **Longitude** 87.7835798

COUNTY COOK **DRILLING RIG** Mobile B57 **HAMMER TYPE** AUTO
DRILLING METHOD MUD ROTARY **HAMMER EFF (%)** 92.1

STRUCT. NO. 016-0927
Station 300+00

BORING NO. BSB-1
Station 301+39.39
Offset 15.66ft LT
Ground Surface Elev. 717.79 ft

Surface Water Elev. N/A ft
Stream Bed Elev. N/A ft

Groundwater Elev.:
First Encounter N/A ft
Upon Completion N/A ft
After N/A **Hrs.** N/A ft

DEPTH (ft)	BLOWS (/6")	UCS Qu (tsf)	MOIST (%)	Material
				Very Stiff to Hard Gray, Moist to Very Moist SILTY CLAY, trace gravel (CL/ML) *(continued)*
	4			
-45	5 6		32	
	3			
-50	5 5	2.1 B	22	
	7			
-55	6 6	4.6 B	15	
	659.29			
	3			Loose Gray, Wet SAND, with gravel and clay (SPG)
-60	3 6		25	

DEPTH (ft)	BLOWS (/6")	UCS Qu (tsf)	MOIST (%)	Material
				Loose Gray, Wet SAND, with gravel and clay (SPG) *(continued)*
	4			654.29
-65	5 5	1.7 B	17	Stiff to Very Stiff Gray, Moist SILTY CLAY, trace gravel (CL/ML)
	9			Sand and gravel seam at 68.5 feet
-70	8 6	2.3 P	12	
	644.29			
	8			Medium Dense Gray, Moist SILTY LOAM, with sand, trace gravel (MLS)
-75	3 8		17	
	639.29			
	12			Medium Dense Gray, Dry GRAVEL, with sand (GPS)
-80	16 13		5	637.79

The Unconfined Compressive Strength (UCS) Failure Mode is indicated by (B-Bulge, S-Shear, P-Penetrometer)
The SPT (N value) is the sum of the last two blow values in each sampling zone (AASHTO T206)

BBS, form 137 (Rev. 8-99)

Illinois Department of Transportation
Division of Highways
GSG Consultants, Inc.

SOIL BORING LOG

Date 12/3/24

ROUTE Oak Park Avenue **DESCRIPTION** Bridge Abutment Boring **LOGGED BY** TS

SECTION I-80 at Oak Park Avenue **LOCATION** Oak Park Avenue, **SEC.** 6, **TWP.** 35N, **RNG.** 13E,
Latitude 41.5515147, **Longitude** 87.7835798

COUNTY COOK **DRILLING RIG** Mobile B57 **HAMMER TYPE** AUTO
DRILLING METHOD MUD ROTARY **HAMMER EFF (%)** 92.1

STRUCT. NO. 016-0927
Station 300+00

BORING NO. BSB-1
Station 301+39.39
Offset 15.66ft LT
Ground Surface Elev. 717.79 ft

Surface Water Elev. N/A ft
Stream Bed Elev. N/A ft

Groundwater Elev.:
First Encounter N/A ft
Upon Completion N/A ft
After N/A **Hrs.** N/A ft

DEPTH (ft)	BLOWS (/6")	UCS Qu (tsf)	MOIST (%)	Material
				Blind drilling with no bedrock found
-85				
-90				
-95				
				619.29
-100				End of Boring

The Unconfined Compressive Strength (UCS) Failure Mode is indicated by (B-Bulge, S-Shear, P-Penetrometer)
The SPT (N value) is the sum of the last two blow values in each sampling zone (AASHTO T206)

BBS, form 137 (Rev. 8-99)

MODEL: Boring Logs I [Sheet]
FILE NAME: c:\pwworking\ptmeral\pwprod\kludzia\dms617511\D162W20-Boring Logs I.dgn

Ardmore Roderick

USER NAME = kingaludzia	DESIGNED - NMB	REVISED -	
	DRAWN - NMB	REVISED -	
	CHECKED - STB	REVISED -	
PLOT DATE = 5/6/2026	DATE - 5/6/2026	REVISED -	

STATE OF ILLINOIS
DEPARTMENT OF TRANSPORTATION

BORING LOGS I
STRUCTURE NO. 016-0927
SHEET S-34 OF S-36 SHEETS

F.A.I RTE.	SECTION	COUNTY	TOTAL SHEETS	SHEET NO.
80	FAI 80 23 Bridge Replacement 2	COOK	158	109
		CONTRACT NO. 62W20		
	ILLINOIS	FED. AID PROJECT		

Illinois Department of Transportation
Division of Highways
GSG Consultants, Inc.

SOIL BORING LOG

Page 1 of 1

Date 1/7/25

ROUTE Oak Park Avenue DESCRIPTION Bridge Pier Boring LOGGED BY DV

SECTION I-80 at Oak Park Avenue LOCATION Interstate I-80, SEC. 6, TWP. 35N, RNG. 13E

Latitude 41.5512778, Longitude 87.7836611

COUNTY COOK DRILLING RIG Mobil B57 HAMMER TYPE AUTO

DRILLING METHOD HSA HAMMER EFF (%) 92.1

STRUCT. NO. 016-0927
Station 300+00

BORING NO. BSB-2
Station 300+53.69
Offset 40.19ft LT
Ground Surface Elev. 699.00 ft

Surface Water Elev. N/A ft
Stream Bed Elev. N/A ft

Groundwater Elev.:
First Encounter None ft
Upon Completion N/A ft
After N/A Hrs. N/A ft

DEPTH (ft)	BLOWS (/6")	UCS Qu (tsf)	MOIST (%)	Description
698.92				1 inch of Asphalt
698.08				10 inches of Concrete
	4			Gray, Moist
	3		7	FILL: SAND, with gravel
	5			
696.50				
				Very Stiff to Hard
				Brown and Gray, Moist
				SILTY CLAY, trace gravel
				(CL/ML)
	2			
	2	4.0	14	
-5	5	B		
	2			
	4	2.7	25	
	4	B		
	5			
	5	4.0	19	
-10	8	B		
	5			
	5	4.4	20	
	6	B		
685.50				
	4			Stiff to Hard
	5	5.0	20	Gray, Moist
-15	8	B		SILTY CLAY, trace gravel
	4			(CL/ML)
	5	2.9	21	
	6	B		
	4			
	4	2.3	22	
-20	6	B		
				End of Boring

DEPTH (ft)	BLOWS (/6")	UCS Qu (tsf)	MOIST (%)	Description
				Stiff to Hard
				Gray, Moist
				SILTY CLAY, trace gravel
				(CL/ML) *(continued)*
	5			
	5	2.7	22	
	7	B		
	5			
	6	2.3	23	
-25	7	B		
	2			
	4	1.7	24	
	4	B		
	4			
	4	1.9	25	
-30	6	B		
	2			
	4	1.7	14	
-35	4	B		
	7			
	8	4.6	17	
659.00 -40	11	B		
				End of Boring

The Unconfined Compressive Strength (UCS) Failure Mode is indicated by (B-Bulge, S-Shear, P-Penetrometer)
The SPT (N value) is the sum of the last two blow values in each sampling zone (AASHTO T206)

BBS, form 137 (Rev. 8-99)

Illinois Department of Transportation
Division of Highways
GSG Consultants, Inc.

SOIL BORING LOG

Page 1 of 1

Date 3/5/25

ROUTE Oak Park Avenue DESCRIPTION Bridge Pier Boring LOGGED BY DV

SECTION I-80 at Oak Park Avenue LOCATION Interstate I-80, SEC. 6, TWP. 35N, RNG. 13E

Latitude 41.5511806, Longitude 87.7836444

COUNTY COOK DRILLING RIG Mobil B57 HAMMER TYPE AUTO

DRILLING METHOD HSA HAMMER EFF (%) 92.1

STRUCT. NO. 016-0927
Station 300+00

BORING NO. BSB-3
Station 300+18.17
Offset 36.54ft LT
Ground Surface Elev. 698.50 ft

Surface Water Elev. N/A ft
Stream Bed Elev. N/A ft

Groundwater Elev.:
First Encounter None ft
Upon Completion N/A ft
After N/A Hrs. N/A ft

DEPTH (ft)	BLOWS (/6")	UCS Qu (tsf)	MOIST (%)	Description
				14 inches of Asphalt
697.34				
	3			Very Stiff to Hard
	4	4.5	9	Brown and Gray, Moist
	8	P		SILTY CLAY LOAM, trace gravel
				(CL/ML)
	4			
	4	3.0	13	
-5	6	P		
	2			
	4	2.9	20	
	5	B		
	3			
	3	2.9	24	
-10	3	B		
687.50				
	4			Stiff to Hard
	8	5.2	19	Gray, Moist
	8	B		SILTY CLAY, trace gravel
				(CL/ML)
	3			
	5	2.7	20	
-15	6	B		
	3			
	4	2.5	21	
	6	B		
	2			
	4	2.1	22	
-20	4	B		

DEPTH (ft)	BLOWS (/6")	UCS Qu (tsf)	MOIST (%)	Description
				Stiff to Hard
				Gray, Moist
				SILTY CLAY, trace gravel
				(CL/ML) *(continued)*
	2			
	3	2.1	24	
	4	B		
	2			
	3	2.7	22	
-25	4	B		
	1			
	4	2.3	22	
	5	B		
	3			
	4	1.9	24	
-30	4	B		
	4			
	7	2.9	13	
-35	7	B		
	3			
	4	2.1	15	
658.50 -40	5	B		
				End of Boring

The Unconfined Compressive Strength (UCS) Failure Mode is indicated by (B-Bulge, S-Shear, P-Penetrometer)
The SPT (N value) is the sum of the last two blow values in each sampling zone (AASHTO T206)

BBS, form 137 (Rev. 8-99)

Illinois Department of Transportation
Division of Highways
GSG Consultants, Inc.

SOIL BORING LOG

Page 1 of 1

Date 1/6/25

ROUTE Oak Park Avenue DESCRIPTION Bridge Pier Boring LOGGED BY DV

SECTION I-80 at Oak Park Avenue LOCATION Interstate I-80, SEC. 6, TWP. 35N, RNG. 13E

Latitude 41.5509417, Longitude 87.7836222

COUNTY COOK DRILLING RIG Mobil B57 HAMMER TYPE AUTO

DRILLING METHOD HSA HAMMER EFF (%) 92.1

STRUCT. NO. 016-0927
Station 300+00

BORING NO. BSB-4
Station 299+30.98
Offset 32.76ft LT
Ground Surface Elev. 699.00 ft

Surface Water Elev. N/A ft
Stream Bed Elev. N/A ft

Groundwater Elev.:
First Encounter None ft
Upon Completion N/A ft
After N/A Hrs. N/A ft

DEPTH (ft)	BLOWS (/6")	UCS Qu (tsf)	MOIST (%)	Description
698.50				6 inches of Asphalt
697.67				10 inches of Concrete
	20			Gray, Moist to Wet
	10		8	FILL: SAND, with gravel
	4			
695.00				
	4			Very Stiff to Hard
	7	4.5	17	Brown and Gray, Moist to Very
-5	7	P		Moist
				SILTY CLAY, trace gravel
				(CL/ML)
	2			
	3	2.3	25	
	5	B		
	3			
	3	3.1	27	
-10	3	B		
	3			
	3	3.3	24	
	5	B		
685.50				
	4			Stiff to Very Stiff
	5	2.9	21	Gray, Moist
-15	7	B		SILTY CLAY, trace gravel
	3			(CL/ML)
	3	2.1	22	
	6	B		
	1			
	3	2.3	23	
-20	5	B		

DEPTH (ft)	BLOWS (/6")	UCS Qu (tsf)	MOIST (%)	Description
				Stiff to Very Stiff
				Gray, Moist
				SILTY CLAY, trace gravel
				(CL/ML) *(continued)*
	2			
	3	1.7	23	
	3	B		
	4			
	5	2.9	22	
-25	7	B		
	2			
	4	2.7	22	
	5	B		
	3			
	4	2.3	24	
-30	5	B		
	5			
	7	2.7	11	
-35	8	B		
	4			
	4	1.9	15	
659.00 -40	6	B		
				End of Boring

The Unconfined Compressive Strength (UCS) Failure Mode is indicated by (B-Bulge, S-Shear, P-Penetrometer)
The SPT (N value) is the sum of the last two blow values in each sampling zone (AASHTO T206)

BBS, form 137 (Rev. 8-99)

MODEL: Boring Logs II [Sheet]
FILE NAME: c:\pwworking\primera\pwprod\kludzia\dms61751\D1162W20-Boring Logs II.dgn

Ardmore Roderick

USER NAME = kingaludzia	DESIGNED - NMB	REVISED -	
	DRAWN - NMB	REVISED -	
	CHECKED - STB	REVISED -	
PLOT DATE = 5/6/2026	DATE - 5/6/2026	REVISED -	

STATE OF ILLINOIS
DEPARTMENT OF TRANSPORTATION

BORING LOGS II
STRUCTURE NO. 016-0927
SHEET S-35 OF S-36 SHEETS

F.A.I RTE.	SECTION	COUNTY	TOTAL SHEETS	SHEET NO.
80	FAI 80 23 Bridge Replacement 2	COOK	158	110
		CONTRACT NO. 62W20		
	ILLINOIS FED. AID PROJECT			

Illinois Department of Transportation
Division of Highways
GSG Consultants, Inc.

SOIL BORING LOG

Date 12/30/25

ROUTE Oak Park Avenue DESCRIPTION Bridge Abutment Boring LOGGED BY TS

SECTION I-80 at Oak Park Avenue LOCATION Oak Park Avenue, **SEC.** 6, **TWP.** 35N, **RNG.** 13E, **Latitude** 41.5508052, **Longitude** 87.7834389

COUNTY COOK DRILLING RIG Diedrich D-50 HAMMER TYPE AUTO

DRILLING METHOD MUD ROTARY HAMMER EFF (%) 97.7

STRUCT. NO. 016-0927
Station 300+00

BORING NO. BSB-5
Station 298+36.75
Offset 22.45ft LT
Ground Surface Elev. 718.42 ft

Surface Water Elev. N/A ft
Stream Bed Elev. N/A ft

Groundwater Elev.:
First Encounter N/A ft
Upon Completion N/A ft
After N/A Hrs. N/A ft

DEPTH (ft)	BLOWS (/6")	UCS Qu (tsf)	MOIST (%)	
717.92				6 inches of Asphalt 12 inches of Reinforced Concrete
716.92				
	5			Brown, Moist FILL: SILTY CLAY, trace sand and gravel
	4	5.2	17	
	5	B		
-5	5			
	6	5.6	17	
	7	B		
	3			
	3	3.8	19	
	5	B		
	2			
-10	2	2.3	22	
	4	B		
	3			
	4	4.8	14	
	4	B		
704.92				Brown, Moist to Very Moist FILL: SANDY CLAY, trace gravel
	1			
	2	2.7	27	
-15	2	B		
	3			
	5	5.0	25	
	5	B		
	3			
-20	5	2.9	22	
	5	B		

DEPTH (ft)	BLOWS (/6")	UCS Qu (tsf)	MOIST (%)	
				Brown, Moist to Very Moist FILL: SANDY CLAY, trace gravel *(continued)*
	50/6"			
		3.3	18	Asphalt at 21.5 feet
		P		
694.92				
	4			Brown and Dark Gray, Very Moist FILL: SILTY CLAY, trace gravel
	7	4.2	31	
-25	6	B		
692.42				
	1			Very Stiff Brown and Gray, Very Moist SILTY CLAY, trace gravel (CL/ML)
	2	2.1	31	
	3	B		
	5			
	4	2.5	25	
-30	3	B		
684.92				
	4			Stiff to Hard Gray, Moist SILTY CLAY, trace gravel (CL/ML)
	6	4.2	22	
-35	8	B		
	3			
	4	2.9	25	
-40	7	B		

The Unconfined Compressive Strength (UCS) Failure Mode is indicated by (B-Bulge, S-Shear, P-Penetrometer)
The SPT (N value) is the sum of the last two blow values in each sampling zone (AASHTO T206)

BBS, form 137 (Rev. 8-99)

Illinois Department of Transportation
Division of Highways
GSG Consultants, Inc.

SOIL BORING LOG

Date 12/30/25

ROUTE Oak Park Avenue DESCRIPTION Bridge Abutment Boring LOGGED BY TS

SECTION I-80 at Oak Park Avenue LOCATION Oak Park Avenue, **SEC.** 6, **TWP.** 35N, **RNG.** 13E, **Latitude** 41.5508052, **Longitude** 87.7834389

COUNTY COOK DRILLING RIG Diedrich D-50 HAMMER TYPE AUTO

DRILLING METHOD MUD ROTARY HAMMER EFF (%) 97.7

STRUCT. NO. 016-0927
Station 300+00

BORING NO. BSB-5
Station 298+36.75
Offset 22.45ft LT
Ground Surface Elev. 718.42 ft

Surface Water Elev. N/A ft
Stream Bed Elev. N/A ft

Groundwater Elev.:
First Encounter N/A ft
Upon Completion N/A ft
After N/A Hrs. N/A ft

DEPTH (ft)	BLOWS (/6")	UCS Qu (tsf)	MOIST (%)	
				Stiff to Hard Gray, Moist SILTY CLAY, trace gravel (CL/ML) *(continued)*
	3			
	4	1.5	25	
-45	5	B		
	4			
	5	2.9	25	
-50	6	B		
664.92				
	4			Loose Gray, Wet SAND, trace gravel and clay seams (SP)
	4		20	
-55	6			
659.92				
	5			
	7	5.0	18	
-60	11	B		

DEPTH (ft)	BLOWS (/6")	UCS Qu (tsf)	MOIST (%)	
				Hard Gray, Moist SILTY CLAY, trace gravel (CL/ML) *(continued)*
654.92				
	10			Medium Dense to Dense Gray, Moist to Wet SAND, with gravel, trace clay seams (SPG)
	13		17	
	16			
-65				
	7			
	15		7	
-70	16			
644.92				
	4			Stiff Gray, Moist SILTY CLAY, with sand, trace gravel (CL/ML)
	3	1.3	14	
-75	6	B		
639.92				
	10			Medium Dense to Dense Gray, Moist to Wet SAND, trace gravel (SP)
	12		12	
-80	16			

The Unconfined Compressive Strength (UCS) Failure Mode is indicated by (B-Bulge, S-Shear, P-Penetrometer)
The SPT (N value) is the sum of the last two blow values in each sampling zone (AASHTO T206)

BBS, form 137 (Rev. 8-99)

Illinois Department of Transportation
Division of Highways
GSG Consultants, Inc.

SOIL BORING LOG

Date 12/30/25

ROUTE Oak Park Avenue DESCRIPTION Bridge Abutment Boring LOGGED BY TS

SECTION I-80 at Oak Park Avenue LOCATION Oak Park Avenue, **SEC.** 6, **TWP.** 35N, **RNG.** 13E, **Latitude** 41.5508052, **Longitude** 87.7834389

COUNTY COOK DRILLING RIG Diedrich D-50 HAMMER TYPE AUTO

DRILLING METHOD MUD ROTARY HAMMER EFF (%) 97.7

STRUCT. NO. 016-0927
Station 300+00

BORING NO. BSB-5
Station 298+36.75
Offset 22.45ft LT
Ground Surface Elev. 718.42 ft

Surface Water Elev. N/A ft
Stream Bed Elev. N/A ft

Groundwater Elev.:
First Encounter N/A ft
Upon Completion N/A ft
After N/A Hrs. N/A ft

DEPTH (ft)	BLOWS (/6")	UCS Qu (tsf)	MOIST (%)	
				Medium Dense to Dense Gray, Moist to Wet SAND, trace gravel (SP) *(continued)*
	13			
	17		20	
-85	23			
629.92				
	24			Medium Dense to Very Dense Gray, Moist SILTY CLAY LOAM (ML/CL)
	18	4.5	5	
-90	16	P		
	15			
	10	4.5	11	
-95	19	P		
	20			
618.42	25	4.5	11	
-100	30	P		

DEPTH (ft)	BLOWS (/6")	UCS Qu (tsf)	MOIST (%)	
-105				Blind drilling with no bedrock found
-110				
605.42				
				End of Boring
-115				
-120				

The Unconfined Compressive Strength (UCS) Failure Mode is indicated by (B-Bulge, S-Shear, P-Penetrometer)
The SPT (N value) is the sum of the last two blow values in each sampling zone (AASHTO T206)

BBS, form 137 (Rev. 8-99)

MODEL: Boring Logs III [Sheet]
FILE NAME: c:\pwworking\primeral\pwprod\kludzia\dms617511\D162W20-Boring Logs III.dgn

Ardmore Roderick

USER NAME = kingaludzia	DESIGNED - NMB	REVISED -	
	DRAWN - NMB	REVISED -	
	CHECKED - STB	REVISED -	
PLOT DATE = 5/6/2026	DATE - 5/6/2026	REVISED -	

STATE OF ILLINOIS
DEPARTMENT OF TRANSPORTATION

BORING LOGS III
STRUCTURE NO. 016-0927

SHEET S-36 OF S-36 SHEETS

F.A.I RTE.	SECTION	COUNTY	TOTAL SHEETS	SHEET NO.
80	FAI 80 23 Bridge Replacement 2	COOK	158	111
		CONTRACT NO. 62W20		
	ILLINOIS	FED. AID PROJECT		

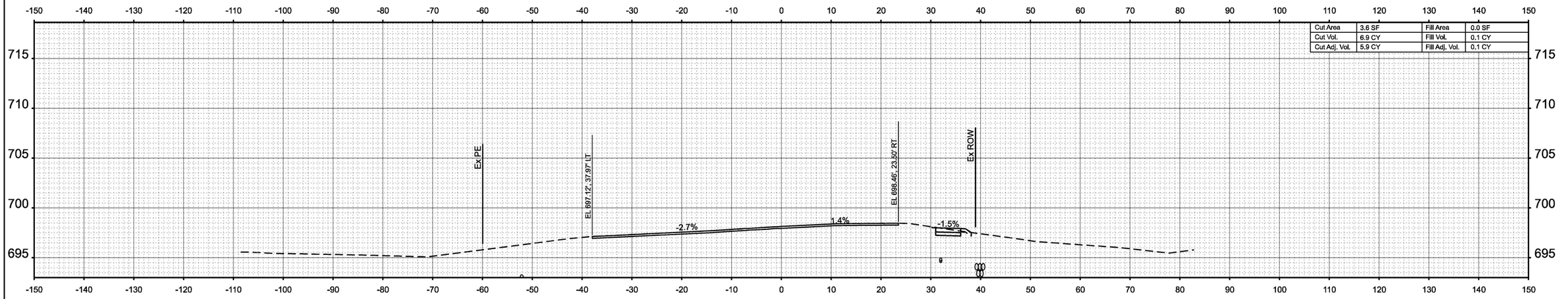

Cut Area	3.6 SF	Fill Area	0.0 SF
Cut Vol.	6.9 CY	Fill Vol.	0.1 CY
Cut Adj. Vol.	5.9 CY	Fill Adj. Vol.	0.1 CY

STA 283+00.00

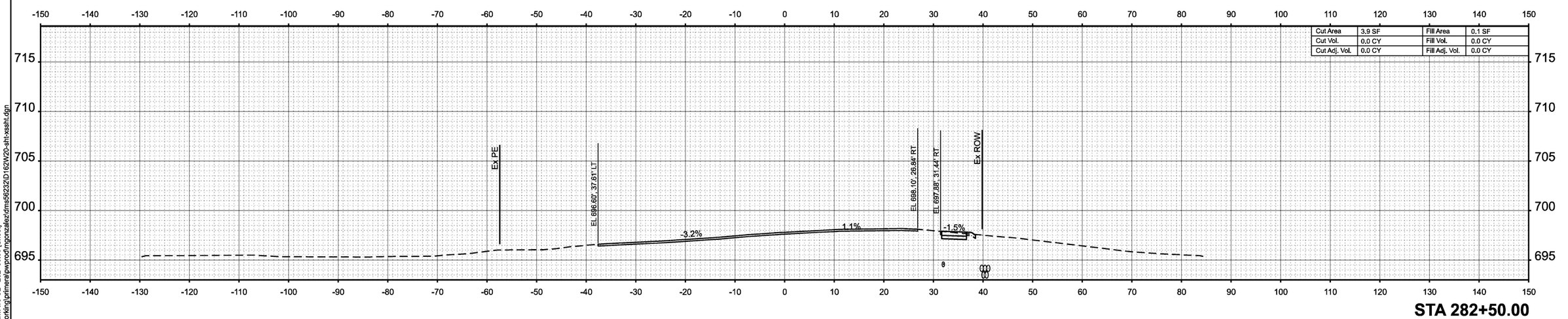

Cut Area	3.9 SF	Fill Area	0.1 SF
Cut Vol.	0.0 CY	Fill Vol.	0.0 CY
Cut Adj. Vol.	0.0 CY	Fill Adj. Vol.	0.0 CY

STA 282+50.00

MODEL: PR Oak Park Ave CL - 282+50.00 [Sheet]
FILE NAME: c:\pwworking\primera\pwprod\mgonzalez\dms56232\D162W20-sht-xssht.dgn

Primera
550 W. JACKSON BLVD. SUITE 600 . CHICAGO IL 60661 P:312-686-0910 F:312-686-0415

USER NAME = MGonzalez	DESIGNED -	REVISED -	
	DRAWN -	REVISED -	
	CHECKED -	REVISED -	
PLOT DATE = 5/4/2026	DATE -	REVISED -	

STATE OF ILLINOIS
DEPARTMENT OF TRANSPORTATION

CROSS SECTIONS

SCALE: 1"=10' | SHEET 1 OF 30 SHEETS | STA. | TO STA.

F.A.I. RTE.	SECTION	COUNTY	TOTAL SHEETS	SHEET NO.
80	FAI 80 23 Bridge Replacement 2	COOK	158	112
		CONTRACT NO. 62W20		
		ILLINOIS	FED. AID PROJECT	

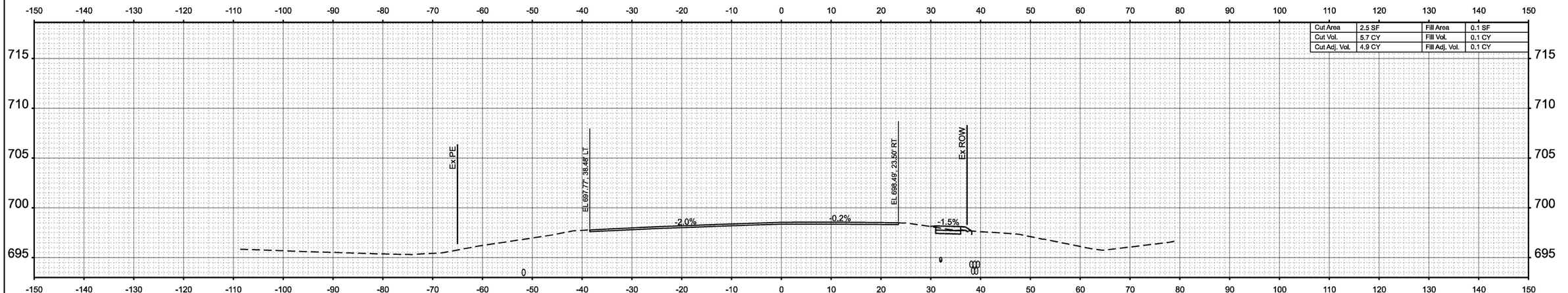

Cut Area	2.5 SF	Fill Area	0.1 SF
Cut Vol.	5.7 CY	Fill Vol.	0.1 CY
Cut Adj. Vol.	4.9 CY	Fill Adj. Vol.	0.1 CY

STA 284+00.00

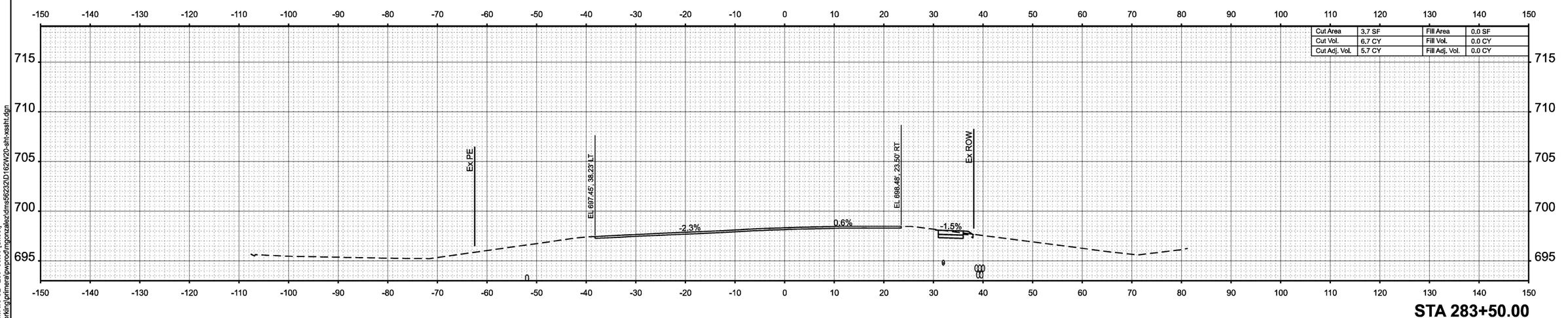

Cut Area	3.7 SF	Fill Area	0.0 SF
Cut Vol.	6.7 CY	Fill Vol.	0.0 CY
Cut Adj. Vol.	5.7 CY	Fill Adj. Vol.	0.0 CY

STA 283+50.00

MODEL: PR Oak Park Ave CL - 283+50.00 [Sheet]
FILE NAME: c:\pwworking\primera\pwprod\mgonzalez\dms56232\D162W20-sht-xssht.dgn

Primera
650 W. JACKSON BLVD. SUITE 600 . CHICAGO IL 60661 P:312-686-0910 F:312-686-0415

USER NAME = MGonzalez	DESIGNED -	REVISED -	
	DRAWN -	REVISED -	
	CHECKED -	REVISED -	
PLOT DATE = 5/4/2026	DATE -	REVISED -	

STATE OF ILLINOIS
DEPARTMENT OF TRANSPORTATION

CROSS SECTIONS

SCALE: 1"=10' | SHEET 2 OF 30 SHEETS | STA. | TO STA.

F.A.I RTE.	SECTION	COUNTY	TOTAL SHEETS	SHEET NO.
80	FAI 80 23 Bridge Replacement 2	COOK	158	113
		CONTRACT NO. 62W20		
		ILLINOIS	FED. AID PROJECT	

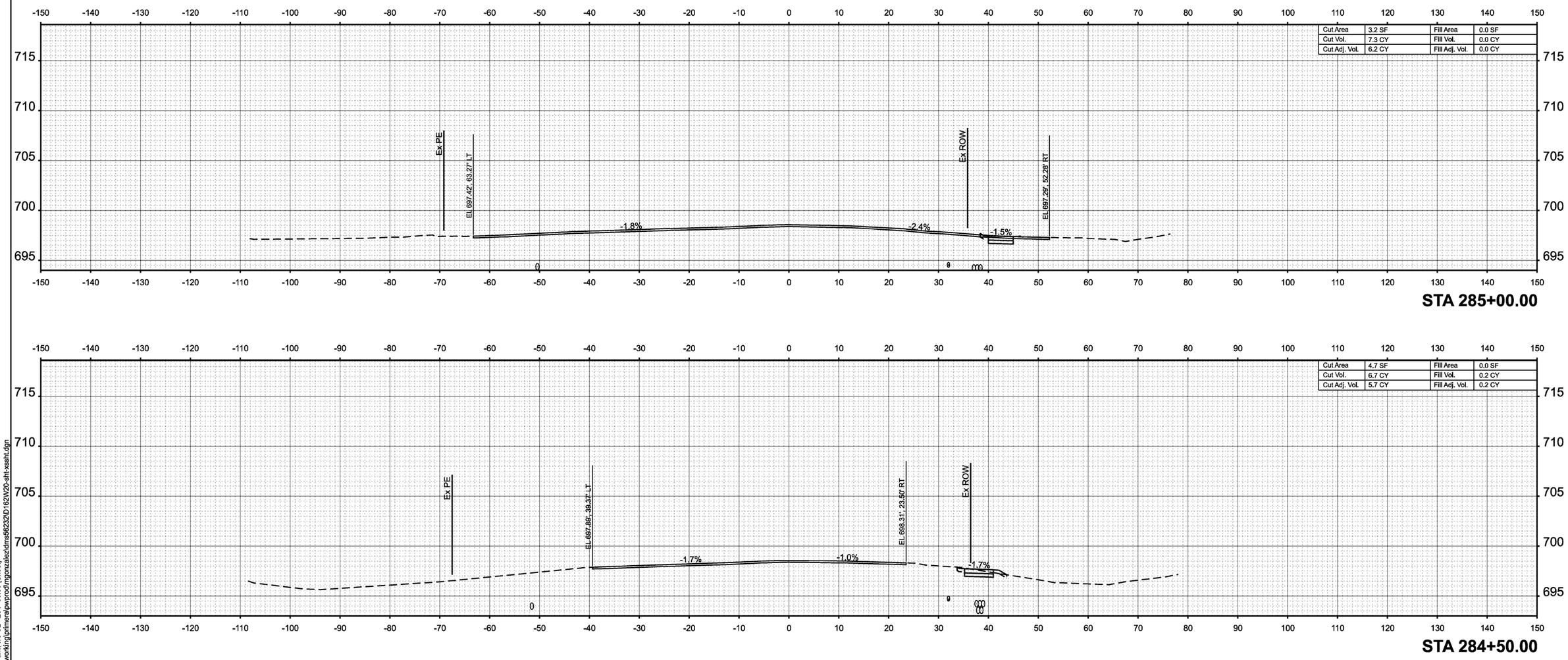

MODEL: PR Oak Park Ave CL - 284+50.00 [Sheet]
FILE NAME: c:\pwworking\primera\pwprod\mgonzalez\dms56232\D1162W20-sht-xssht.dgn

Primera
650 W. JACKSON BLVD. SUITE 630 . CHICAGO IL 60661 P:312-986-0810 F:312-986-0815

USER NAME = MGonzalez	DESIGNED -	REVISED -
	DRAWN -	REVISED -
	CHECKED -	REVISED -
PLOT DATE = 5/4/2026	DATE -	REVISED -

STATE OF ILLINOIS
DEPARTMENT OF TRANSPORTATION

CROSS SECTIONS

SCALE: 1"=10' | SHEET 3 OF 30 SHEETS | STA. | TO STA.

F.A. RTE.	SECTION	COUNTY	TOTAL SHEETS	SHEET NO.
80	FAI 80 23 Bridge Replacement 2	COOK	158	114
		CONTRACT NO. 62W20		
	ILLINOIS FED. AID PROJECT			

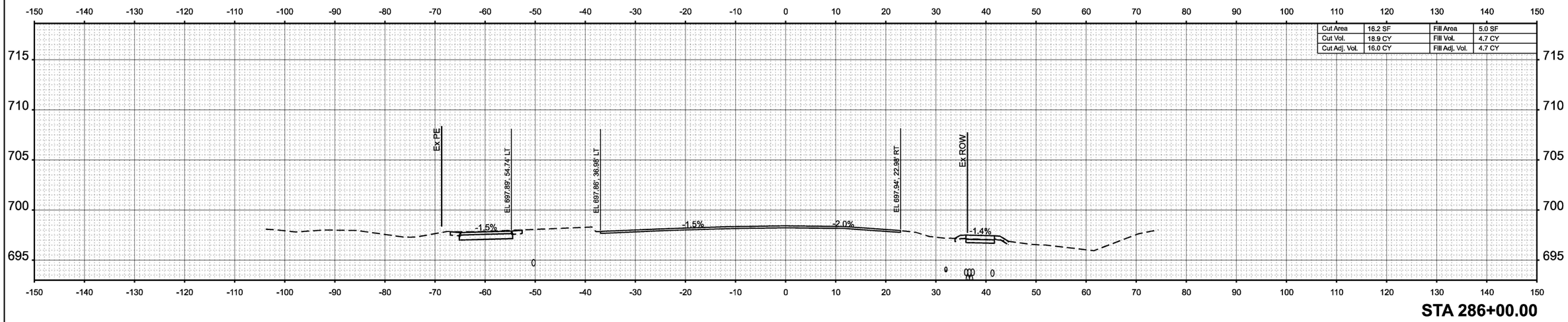

MODEL: PR Oak Park Ave CL - 285+50.00 [Sheet]
FILE NAME: c:\pwworking\pdmera\pwprod\mgonzalez\dms56232\D162W20-sht-xsht.dgn

Primera
650 W. JACKSON BLVD. SUITE 600 CHICAGO IL 60661 P:312-086-0910 F:312-086-0915

USER NAME = MGonzalez	DESIGNED -	REVISED -	
	DRAWN -	REVISED -	
	CHECKED -	REVISED -	
PLOT DATE = 5/4/2026	DATE -	REVISED -	

STATE OF ILLINOIS
DEPARTMENT OF TRANSPORTATION

CROSS SECTIONS

SCALE: 1"=10' | SHEET 4 OF 30 SHEETS | STA. | TO STA.

F.A.I RTE.	SECTION	COUNTY	TOTAL SHEETS	SHEET NO.
80	FAI 80 23 Bridge Replacement 2	COOK	158	115
		CONTRACT NO. 62W20		
	ILLINOIS FED. AID PROJECT			

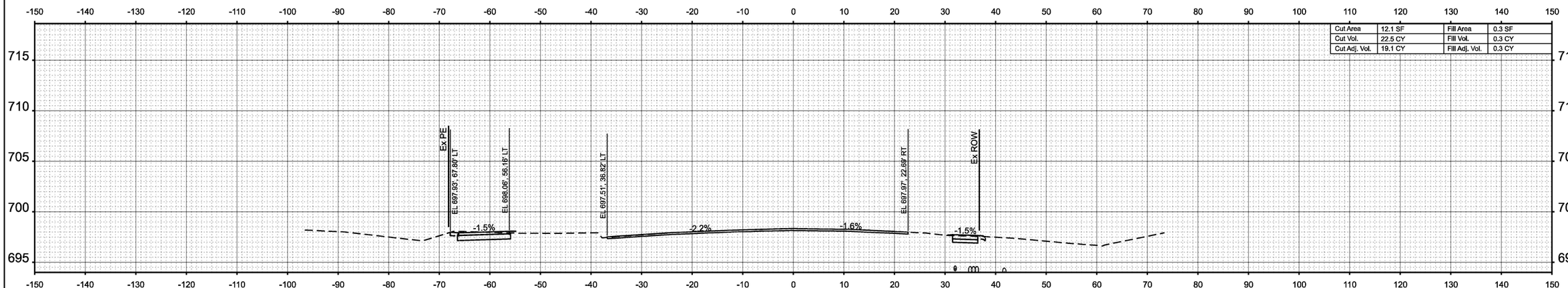

STA 287+00.00

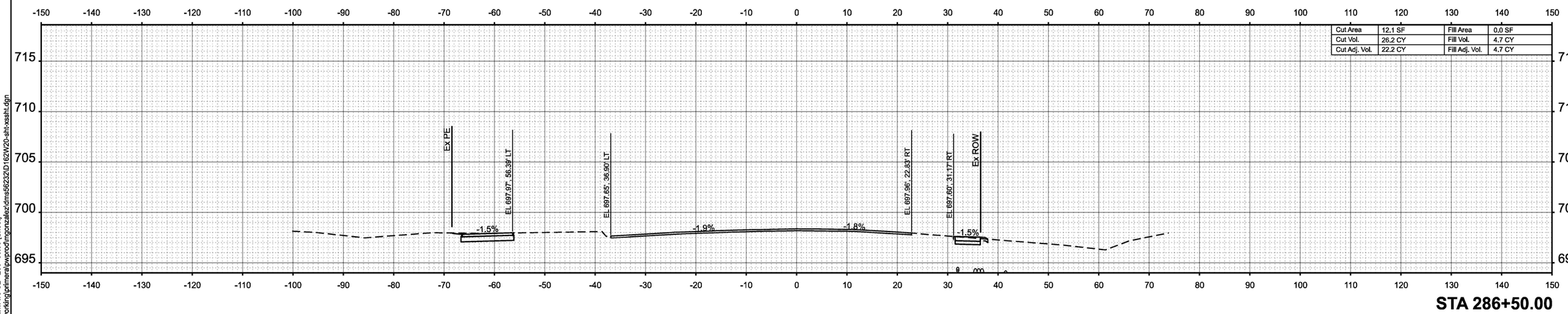

STA 286+50.00

MODEL: PR Oak Park Ave CL - 286+50.00 [Sheet]
FILE NAME: c:\pwworking\primera\pwprod\mgonzalez\dms56223\D1162W20-sht-xssht.dgn

Primera
650 W. JACKSON BLVD. SUITE 630 . CHICAGO IL 60661 P:312-986-0810 F:312-986-0405

USER NAME = MGonzalez	DESIGNED -	REVISED -
	DRAWN -	REVISED -
	CHECKED -	REVISED -
PLOT DATE = 5/4/2026	DATE -	REVISED -

STATE OF ILLINOIS
DEPARTMENT OF TRANSPORTATION

CROSS SECTIONS

SCALE: 1"=10' | SHEET 5 OF 30 SHEETS | STA. | TO STA.

F.A.I RTE.	SECTION	COUNTY	TOTAL SHEETS	SHEET NO.
80	FAI 80 23 Bridge Replacement 2	COOK	158	116
		CONTRACT NO. 62W20		
	ILLINOIS FED. AID PROJECT			

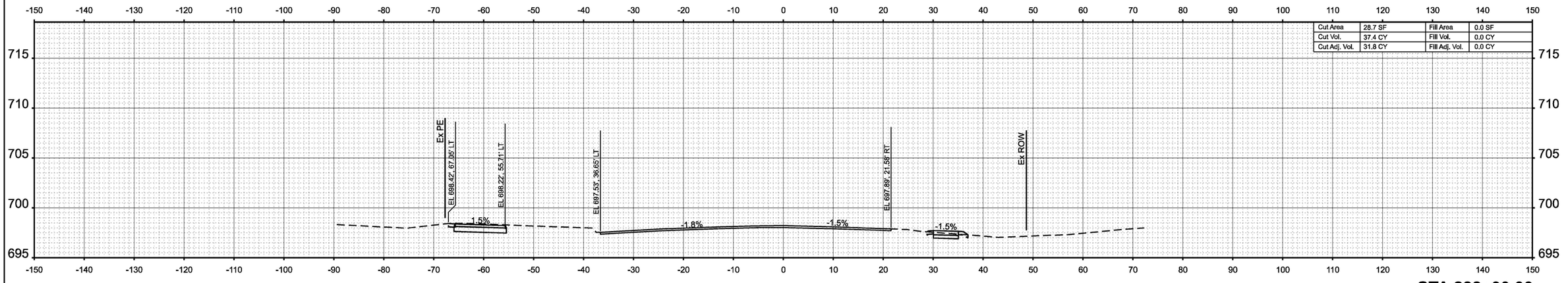

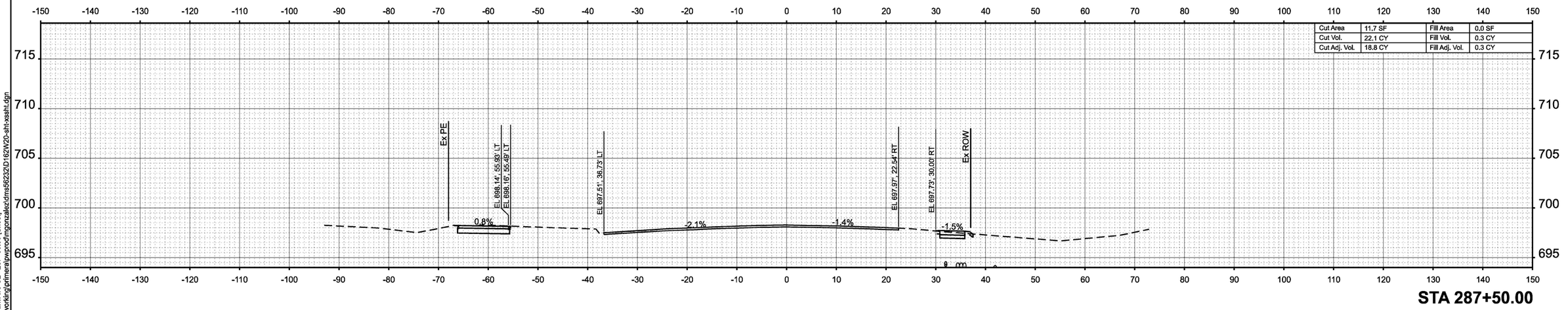

MODEL: PR Oak Park Ave CL - 287+50.00 [Sheet]
FILE NAME: c:\pwworking\primera\pwprod\mgonzalez\dms56223\D1162W20-sht-xssht.dgn

Primera
650 W. JACKSON BLVD. SUITE 630 CHICAGO IL 60661 P:312-986-0810 F:312-986-0815

USER NAME = MGonzalez	DESIGNED -	REVISED -
	DRAWN -	REVISED -
	CHECKED -	REVISED -
PLOT DATE = 5/4/2026	DATE -	REVISED -

STATE OF ILLINOIS
DEPARTMENT OF TRANSPORTATION

CROSS SECTIONS

SCALE: 1"=10' | SHEET 6 OF 30 SHEETS | STA. | TO STA.

F.A.I RTE.	SECTION	COUNTY	TOTAL SHEETS	SHEET NO.
80	FAI 80 23 Bridge Replacement 2	COOK	158	117
		CONTRACT NO. 62W20		
	ILLINOIS FED. AID PROJECT			

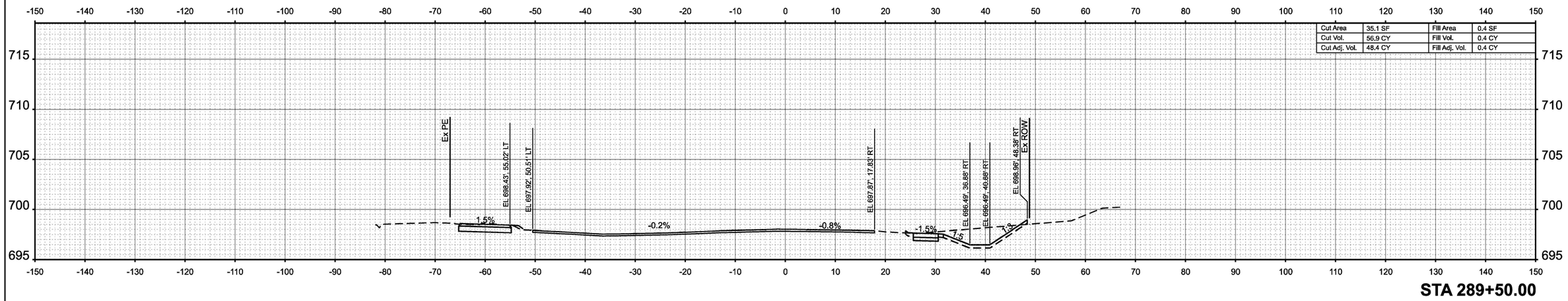

Cut Area	35.1 SF	Fill Area	0.4 SF
Cut Vol.	56.9 CY	Fill Vol.	0.4 CY
Cut Adj. Vol.	48.4 CY	Fill Adj. Vol.	0.4 CY

STA 289+50.00

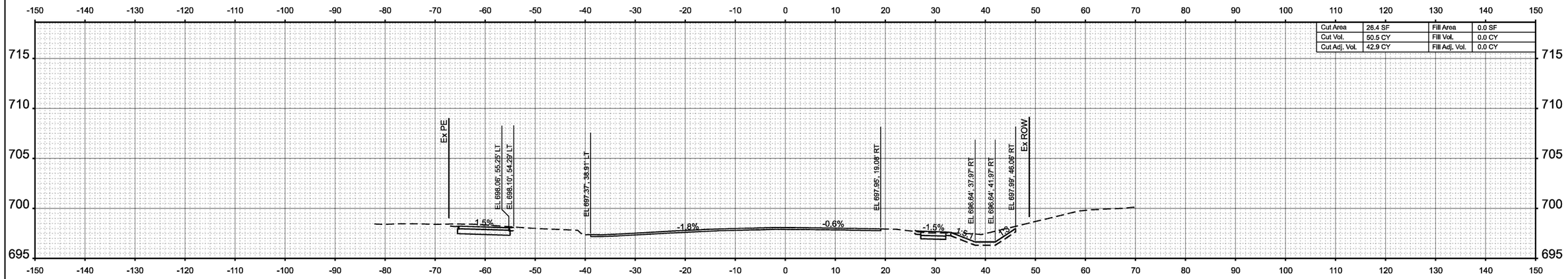

Cut Area	26.4 SF	Fill Area	0.0 SF
Cut Vol.	50.5 CY	Fill Vol.	0.0 CY
Cut Adj. Vol.	42.9 CY	Fill Adj. Vol.	0.0 CY

STA 289+00.00

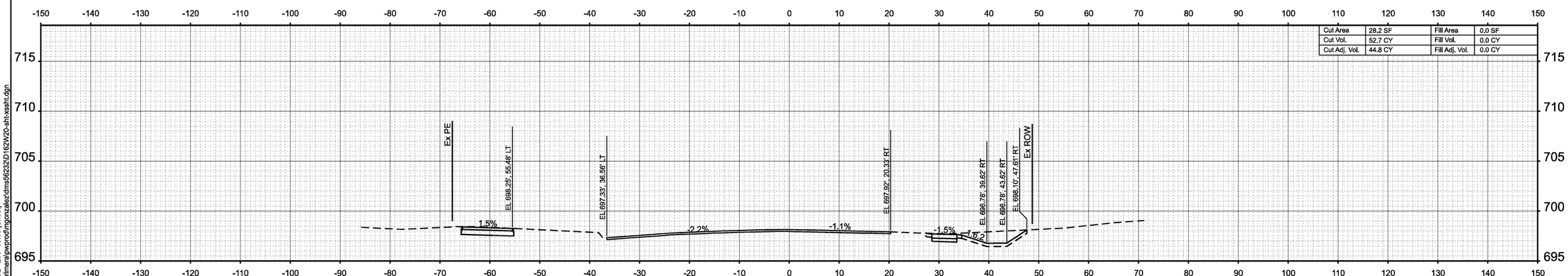

Cut Area	28.2 SF	Fill Area	0.0 SF
Cut Vol.	52.7 CY	Fill Vol.	0.0 CY
Cut Adj. Vol.	44.8 CY	Fill Adj. Vol.	0.0 CY

STA 288+50.00

MODEL: PR Oak Park Ave CL - 288+50.00 [Sheet]
FILE NAME: c:\pwworking\primera\pwprod\mgonzalez\dms56232\D162W20-sht-xssht.dgn

Primera
550 W. JACKSON BLVD. SUITE 600 . CHICAGO IL 60661 P:312-686-8910 F:312-686-8415

USER NAME = MGonzalez	DESIGNED -	REVISED -	
	DRAWN -	REVISED -	
	CHECKED -	REVISED -	
PLOT DATE = 5/4/2026	DATE -	REVISED -	

STATE OF ILLINOIS
DEPARTMENT OF TRANSPORTATION

CROSS SECTIONS

SCALE: 1"=10' | SHEET 7 OF 30 SHEETS | STA. | TO STA.

F.A.I RTE.	SECTION	COUNTY	TOTAL SHEETS	SHEET NO.
80	FAI 80 23 Bridge Replacement 2	COOK	158	118
		CONTRACT NO. 62W20		
		ILLINOIS	FED. AID PROJECT	

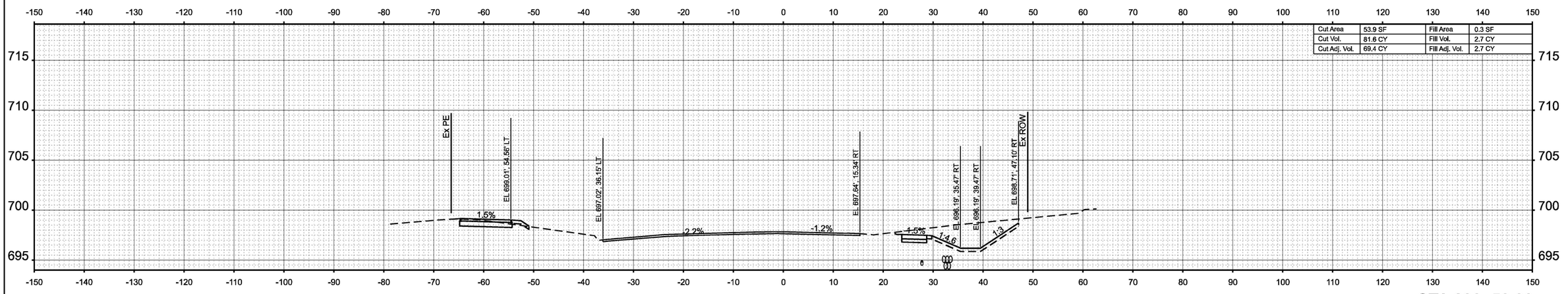

Cut Area	53.9 SF	Fill Area	0.3 SF
Cut Vol.	81.6 CY	Fill Vol.	2.7 CY
Cut Adj. Vol.	69.4 CY	Fill Adj. Vol.	2.7 CY

STA 290+50.00

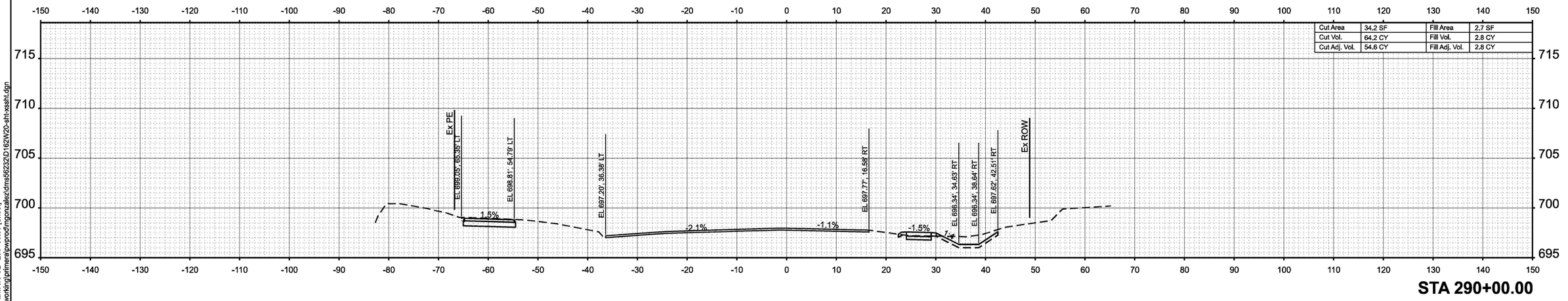

Cut Area	34.2 SF	Fill Area	2.7 SF
Cut Vol.	64.2 CY	Fill Vol.	2.8 CY
Cut Adj. Vol.	54.6 CY	Fill Adj. Vol.	2.8 CY

STA 290+00.00

MODEL: PR Oak Park Ave CL - 290+00.00 [Sheet]
FILE NAME: c:\pwworking\primera\pwprod\mgonzalez\dms56232\D162W20-sht-xssht.dgn

Primera
650 W. JACKSON BLVD. SUITE 600 . CHICAGO IL 60661 P:312-686-0910 F:312-686-0415

USER NAME = MGonzalez	DESIGNED -	REVISED -	
	DRAWN -	REVISED -	
	CHECKED -	REVISED -	
PLOT DATE = 5/4/2026	DATE -	REVISED -	

STATE OF ILLINOIS
DEPARTMENT OF TRANSPORTATION

CROSS SECTIONS

SCALE: 1"=10' | SHEET 8 OF 30 SHEETS | STA. | TO STA.

F.A.I RTE.	SECTION	COUNTY	TOTAL SHEETS	SHEET NO.
80	FAI 80 23 Bridge Replacement 2	COOK	158	119
		CONTRACT NO. 62W20		
		ILLINOIS	FED. AID PROJECT	

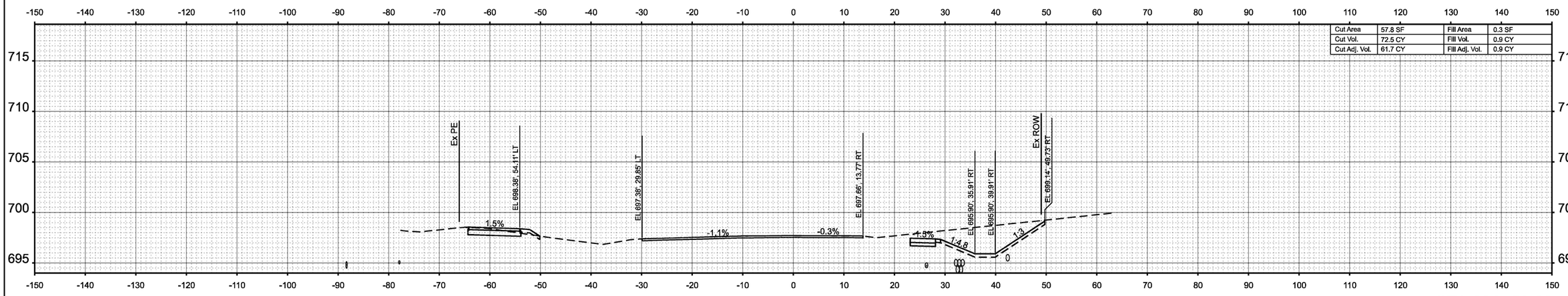

Cut Area	57.8 SF	Fill Area	0.3 SF
Cut Vol.	72.5 CY	Fill Vol.	0.9 CY
Cut Adj. Vol.	61.7 CY	Fill Adj. Vol.	0.9 CY

STA 291+50.00

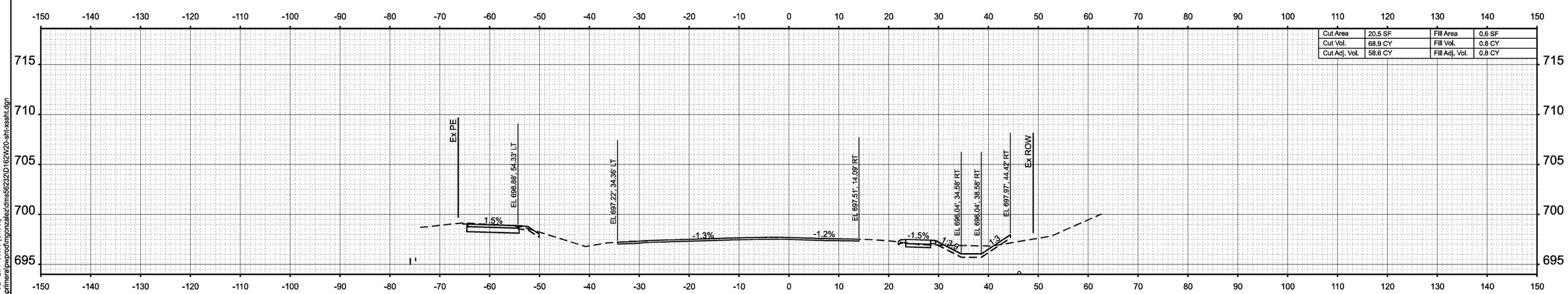

Cut Area	20.5 SF	Fill Area	0.6 SF
Cut Vol.	68.9 CY	Fill Vol.	0.8 CY
Cut Adj. Vol.	58.6 CY	Fill Adj. Vol.	0.8 CY

STA 291+00.00

MODEL: PR Oak Park Ave CL - 291+00.00 [Sheet]
FILE NAME: c:\pwworking\primera\pwprod\mgonzalez\dms56232\D162W20-sht-xssht.dgn

Primera
650 W. JACKSON BLVD. SUITE 600 . CHICAGO IL 60661 P:312-686-0910 F:312-686-0415

USER NAME = MGonzalez	DESIGNED -	REVISED -	
	DRAWN -	REVISED -	
	CHECKED -	REVISED -	
PLOT DATE = 5/4/2026	DATE -	REVISED -	

STATE OF ILLINOIS
DEPARTMENT OF TRANSPORTATION

CROSS SECTIONS

SCALE: 1"=10' | SHEET 9 OF 30 SHEETS | STA. | TO STA.

F.A.I RTE.	SECTION	COUNTY	TOTAL SHEETS	SHEET NO.
80	FAI 80 23 Bridge Replacement 2	COOK	158	120
		CONTRACT NO. 62W20		
		ILLINOIS	FED. AID PROJECT	

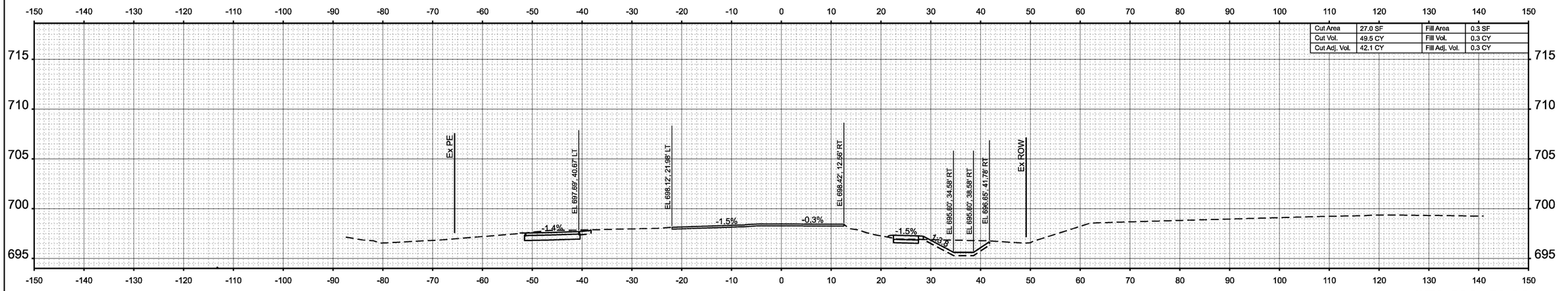

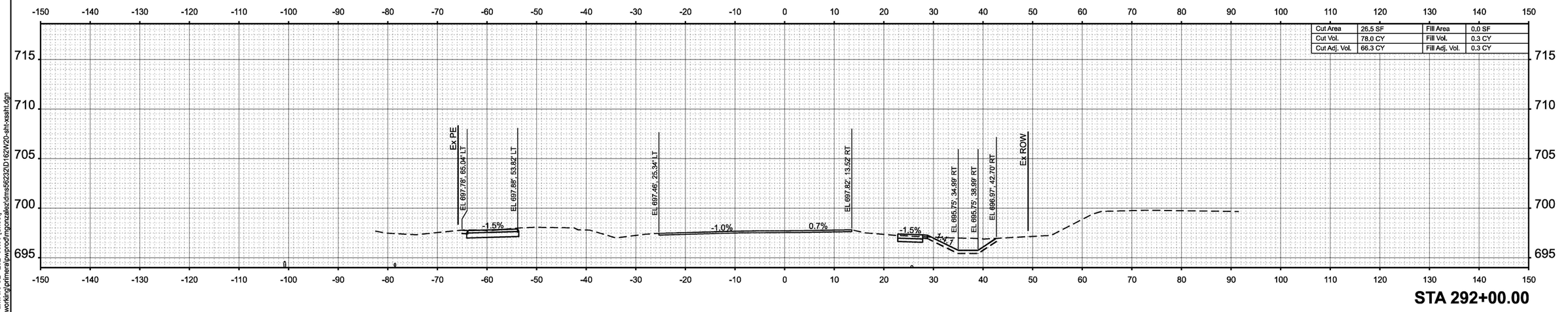

MODEL: PR Oak Park Ave CL - 292+00.00 [Sheet]
FILE NAME: c:\pwworking\gtrimera\pwprod\mgonzalez\dms56232\D162W20-sht-xssht.dgn

Primera
150 W. JACKSON BLVD. SUITE 600 CHICAGO IL 60661 P:312-686-0910 F:312-686-0415

USER NAME = MGonzalez	DESIGNED -	REVISED -	
	DRAWN -	REVISED -	
	CHECKED -	REVISED -	
PLOT DATE = 5/4/2026	DATE -	REVISED -	

STATE OF ILLINOIS
DEPARTMENT OF TRANSPORTATION

CROSS SECTIONS

SCALE: 1"=10' | SHEET 10 OF 30 SHEETS | STA. | TO STA.

F.A.I RTE.	SECTION	COUNTY	TOTAL SHEETS	SHEET NO.
80	FAI 80 23 Bridge Replacement 2	COOK	158	121
		CONTRACT NO. 62W20		
		ILLINOIS FED. AID PROJECT		

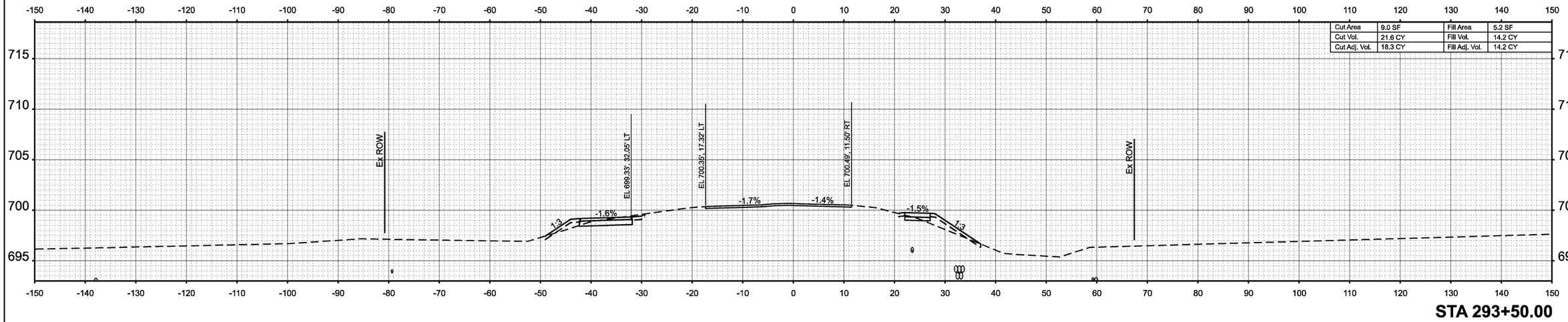

STA 293+50.00

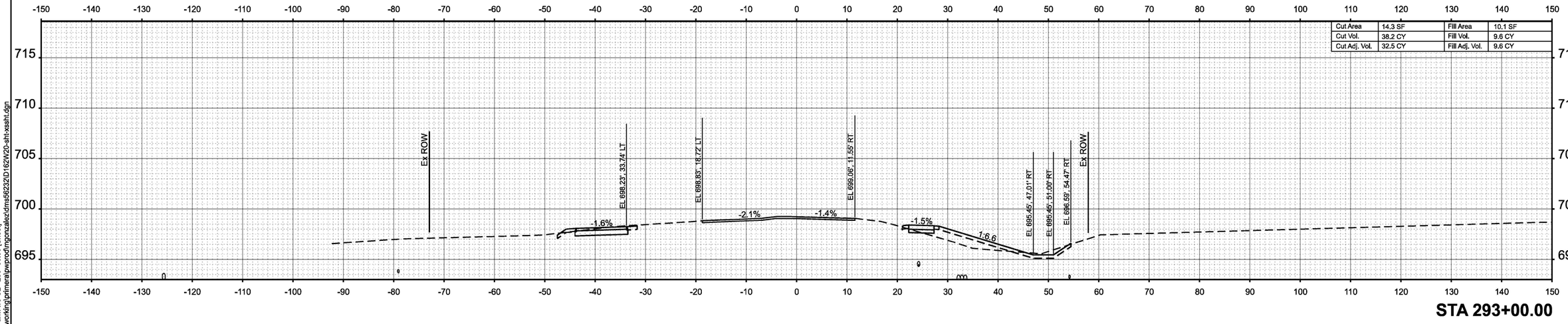

STA 293+00.00

MODEL: PR Oak Park Ave CL - 293+00.00 [Sheet]
FILE NAME: c:\pwworking\primera\pwprod\mgonzalez\dms56232\D1162W20-sht-xssht.dgn

Primera
650 W. JACKSON BLVD. SUITE 630 . CHICAGO IL 60661 P:312-986-0810 F:312-986-0815

USER NAME = MGonzalez	DESIGNED -	REVISED -	
	DRAWN -	REVISED -	
	CHECKED -	REVISED -	
PLOT DATE = 5/4/2026	DATE -	REVISED -	

STATE OF ILLINOIS
DEPARTMENT OF TRANSPORTATION

CROSS SECTIONS

SCALE: 1"=10' | SHEET 11 OF 30 SHEETS | STA. | TO STA.

F.A.I RTE.	SECTION	COUNTY	TOTAL SHEETS	SHEET NO.
80	FAI 80 23 Bridge Replacement 2	COOK	158	122
		CONTRACT NO. 62W20		
	ILLINOIS FED. AID PROJECT			

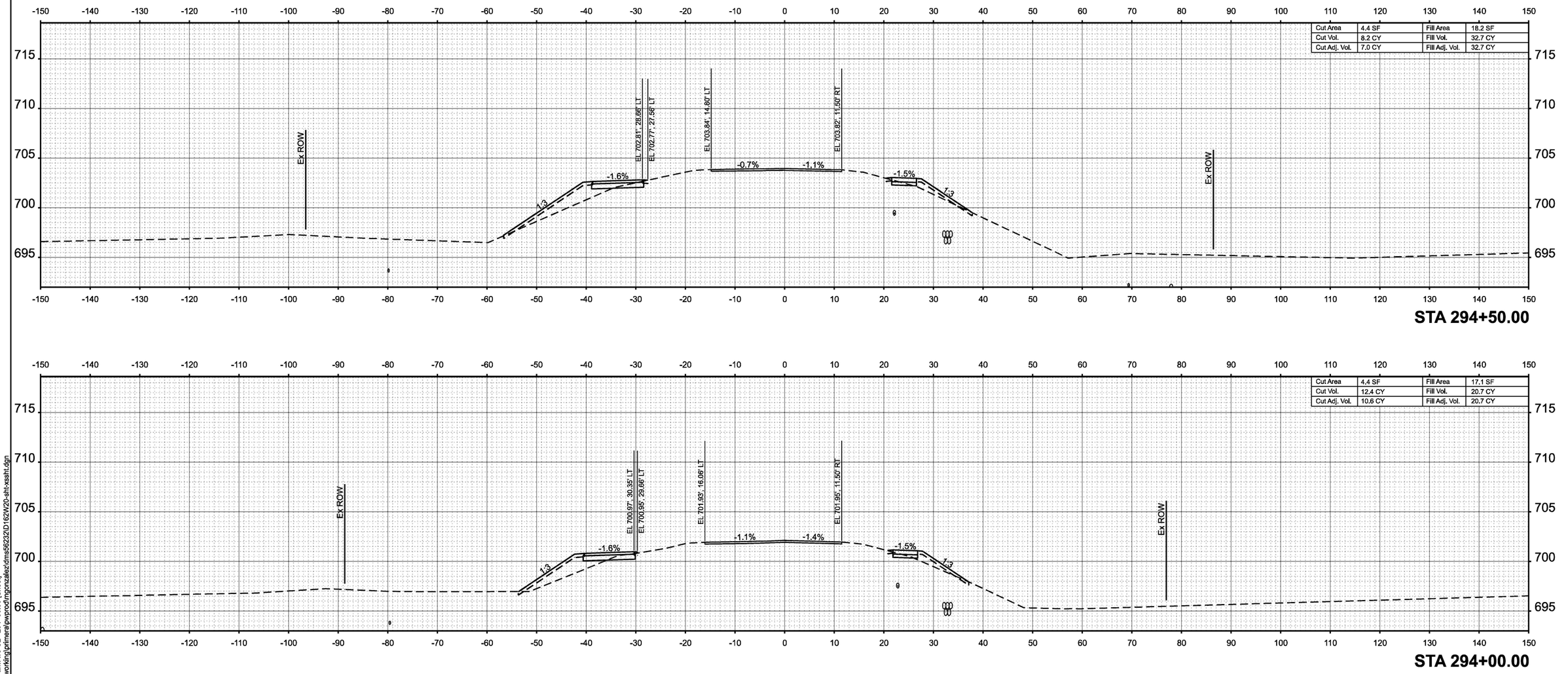

MODEL: PR Oak Park Ave CL - 294+00.00 [Sheet]
FILE NAME: c:\pwworking\gtmeral\pwprod\mgonzalez2\dms56232\D162W20-sht-xssht.dgn

Primera
550 W. JACKSON BLVD. SUITE 830 . CHICAGO IL 60661 P:312-686-0910 F:312-686-0415

USER NAME = MGonzalez	DESIGNED -	REVISED -	
	DRAWN -	REVISED -	
	CHECKED -	REVISED -	
PLOT DATE = 5/4/2026	DATE -	REVISED -	

STATE OF ILLINOIS
DEPARTMENT OF TRANSPORTATION

CROSS SECTIONS

SCALE: 1"=10' | SHEET 12 OF 30 SHEETS | STA. | TO STA.

F.A.I RTE.	SECTION	COUNTY	TOTAL SHEETS	SHEET NO.
80	FAI 80 23 Bridge Replacement 2	COOK	158	123
		CONTRACT NO. 62W20		
		ILLINOIS	FED. AID PROJECT	

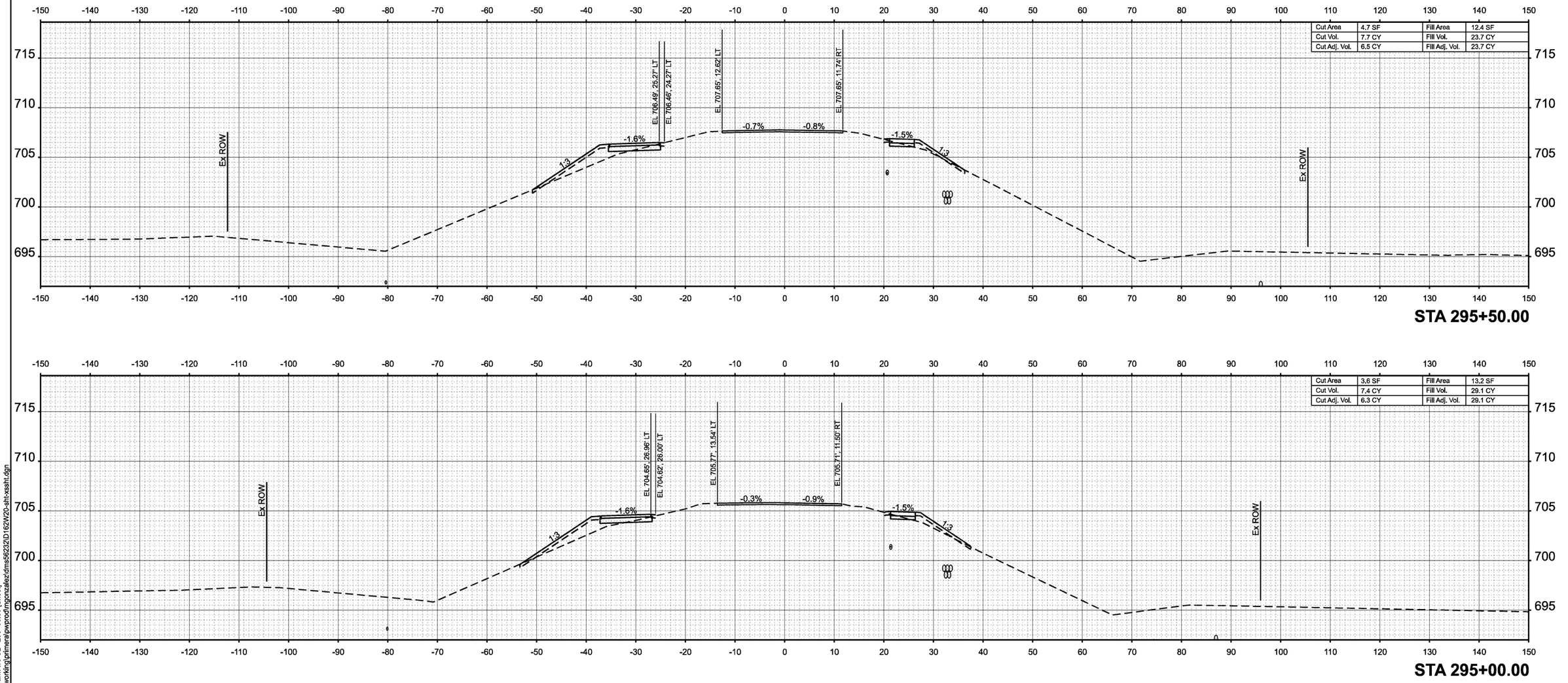

MODEL: PR Oak Park Ave CL - 295+00.00 [Sheet]
FILE NAME: c:\pwworking\primera\pwprod\mgonzalez\dms56222\D162W20-sht-xssht.dgn

Primera
650 W. JACKSON BLVD. SUITE 630 . CHICAGO IL 60661 P:312-986-0910 F:312-986-0915

USER NAME = MGonzalez	DESIGNED -	REVISED -
	DRAWN -	REVISED -
	CHECKED -	REVISED -
PLOT DATE = 5/4/2026	DATE -	REVISED -

STATE OF ILLINOIS
DEPARTMENT OF TRANSPORTATION

CROSS SECTIONS

SCALE: 1"=10' | SHEET 13 OF 30 SHEETS | STA. | TO STA.

F.A.I RTE.	SECTION	COUNTY	TOTAL SHEETS	SHEET NO.
80	FAI 80 23 Bridge Replacement 2	COOK	158	124
		CONTRACT NO. 62W20		
	ILLINOIS | FED. AID PROJECT			

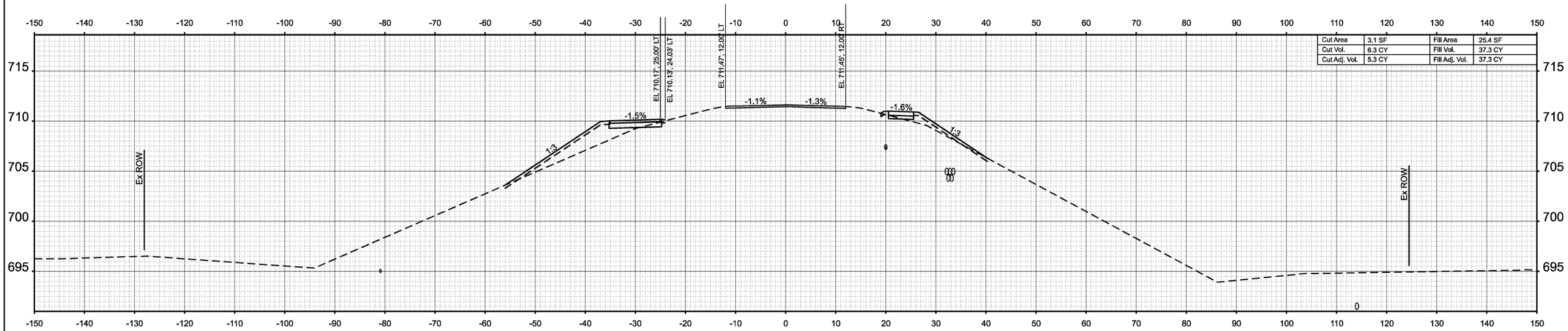

STA 296+50.00

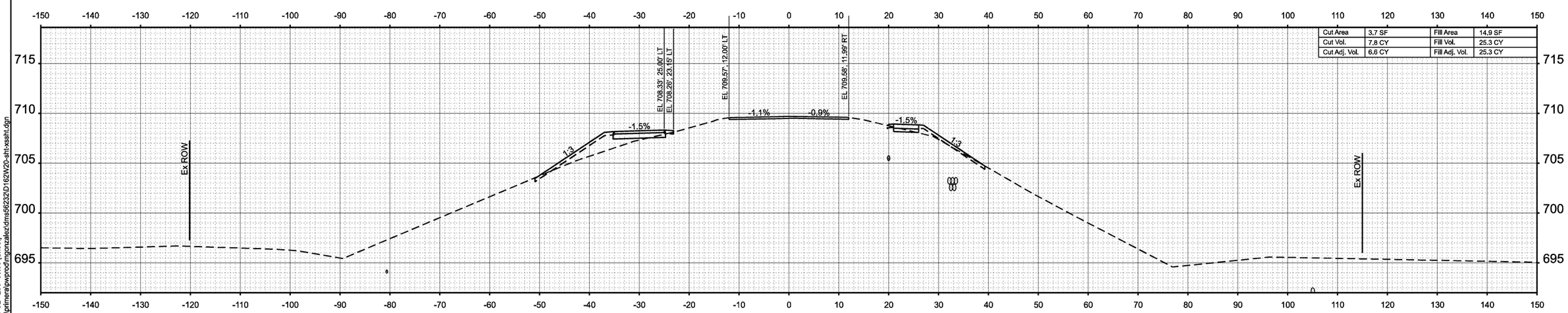

STA 296+00.00

MODEL: PR Oak Park Ave CL - 296+00.00 [Sheet]
FILE NAME: c:\pwworking\primera\pwprod\mgonzalez\dms56232\D162W20-sht-xssht.dgn

Primera
650 W. JACKSON BLVD. SUITE 600 . CHICAGO IL 60661 P:312-686-8010 F:312-686-8415

USER NAME = MGonzalez	DESIGNED -	REVISED -	
	DRAWN -	REVISED -	
	CHECKED -	REVISED -	
PLOT DATE = 5/4/2026	DATE -	REVISED -	

STATE OF ILLINOIS
DEPARTMENT OF TRANSPORTATION

CROSS SECTIONS

SCALE: 1"=10' | SHEET 14 OF 30 SHEETS | STA. | TO STA.

F.A.I RTE.	SECTION	COUNTY	TOTAL SHEETS	SHEET NO.
80	FAI 80 23 Bridge Replacement 2	COOK	158	125
		CONTRACT NO. 62W20		
		ILLINOIS	FED. AID PROJECT	

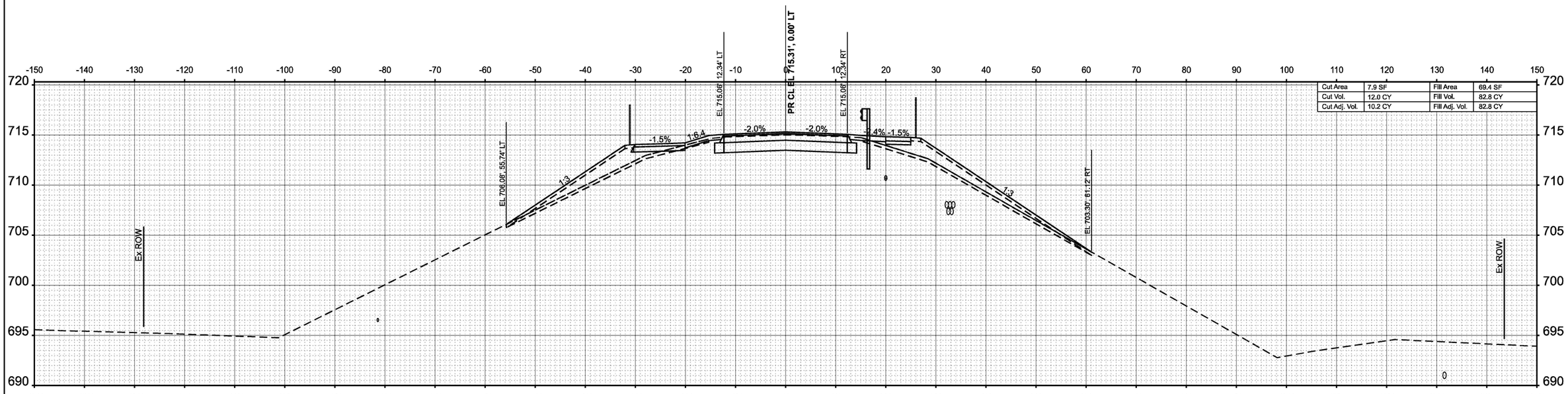

STA 297+50.00

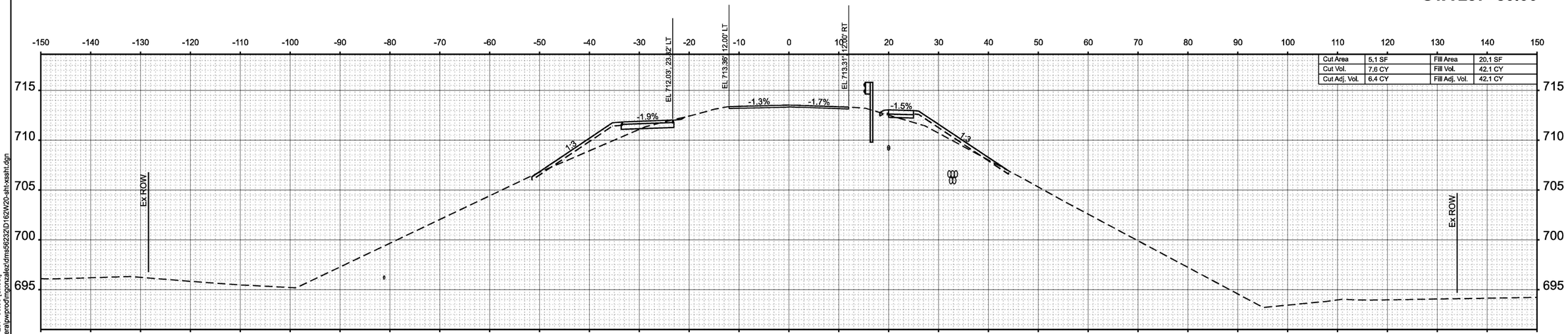

STA 297+00.00

MODEL: PR Oak Park Ave CL - 297+00.00 [Sheet]
FILE NAME: c:\pwworking\primera\pwprod\mgonzalez\dms6232\D162W20-sht-xssht.dgn

Primera
500 W. JACKSON BLVD. SUITE 600 . CHICAGO IL 60661 P.312-086-0910 F.312-086-0410

USER NAME = MGonzalez	DESIGNED -	REVISED -
	DRAWN -	REVISED -
	CHECKED -	REVISED -
PLOT DATE = 5/4/2026	DATE -	REVISED -

STATE OF ILLINOIS
DEPARTMENT OF TRANSPORTATION

CROSS SECTIONS

SCALE: 1"=10' | SHEET 15 OF 30 SHEETS | STA. | TO STA.

F.A.I RTE.	SECTION	COUNTY	TOTAL SHEETS	SHEET NO.
80	FAI 80 23 Bridge Replacement 2	COOK	158	126
		CONTRACT NO. 62W20		
	ILLINOIS	FED. AID PROJECT		

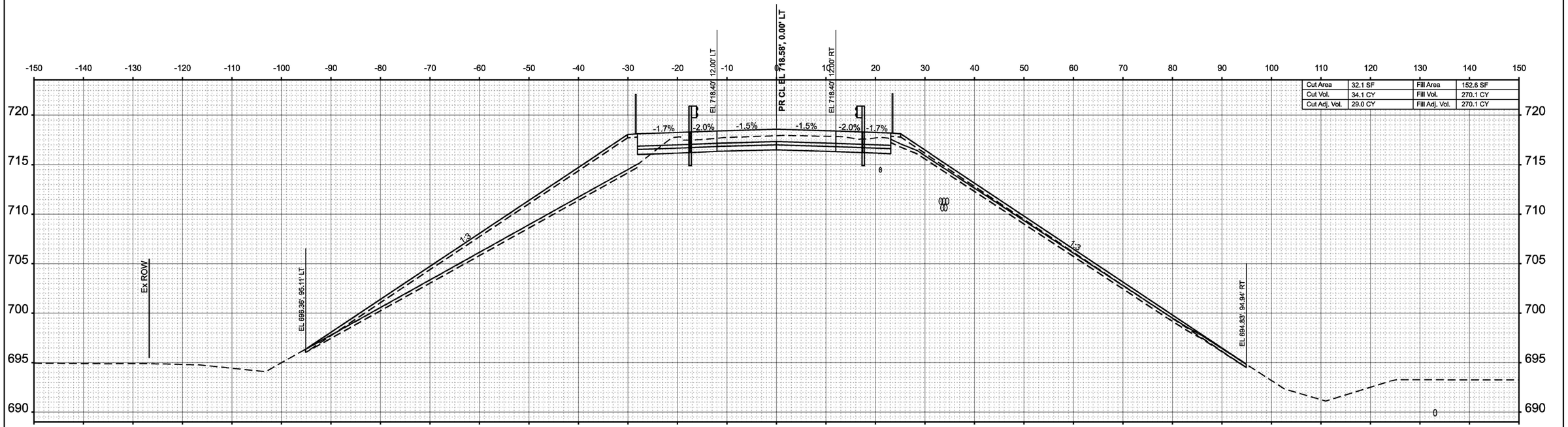

STA 298+50.00

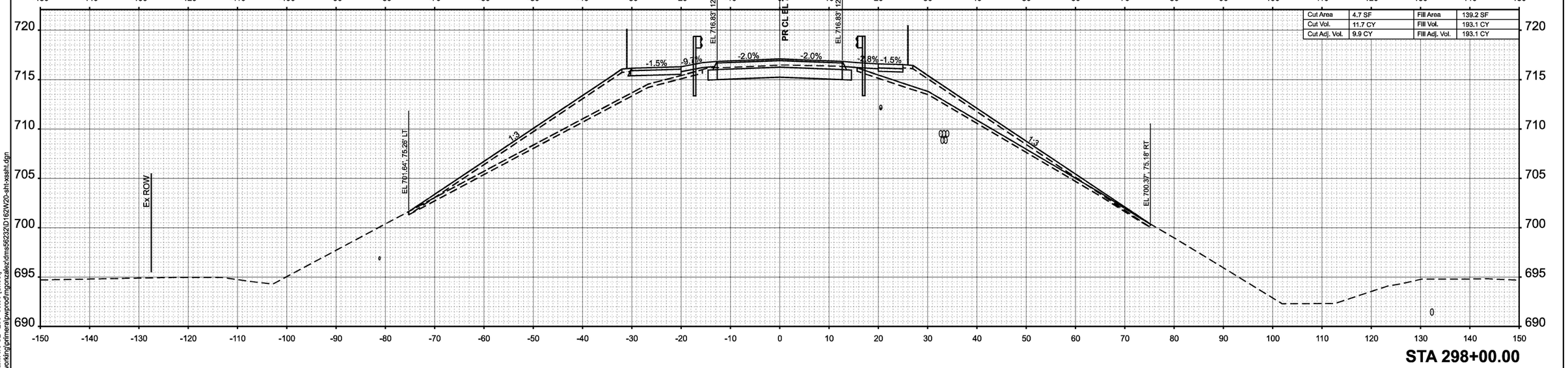

STA 298+00.00

MODEL: PR Oak Park Ave CL - 298+00.00 [Sheet]
FILE NAME: c:\pwworking\primera\pwprod\mgonzalez\dms56232\D1162W20-sht-xssht.dgn

Primera
650 W. JACKSON BLVD. SUITE 630 . CHICAGO IL 60661 P:312-986-0810 F:312-986-0815

USER NAME = MGonzalez	DESIGNED -	REVISED -
	DRAWN -	REVISED -
	CHECKED -	REVISED -
PLOT DATE = 5/4/2026	DATE -	REVISED -

STATE OF ILLINOIS
DEPARTMENT OF TRANSPORTATION

CROSS SECTIONS

SCALE: 1"=10' | SHEET 16 OF 30 SHEETS | STA. | TO STA.

F.A.I RTE.	SECTION	COUNTY	TOTAL SHEETS	SHEET NO.
80	FAI 80 23 Bridge Replacement 2	COOK	158	127
		CONTRACT NO. 62W20		
	ILLINOIS FED. AID PROJECT			

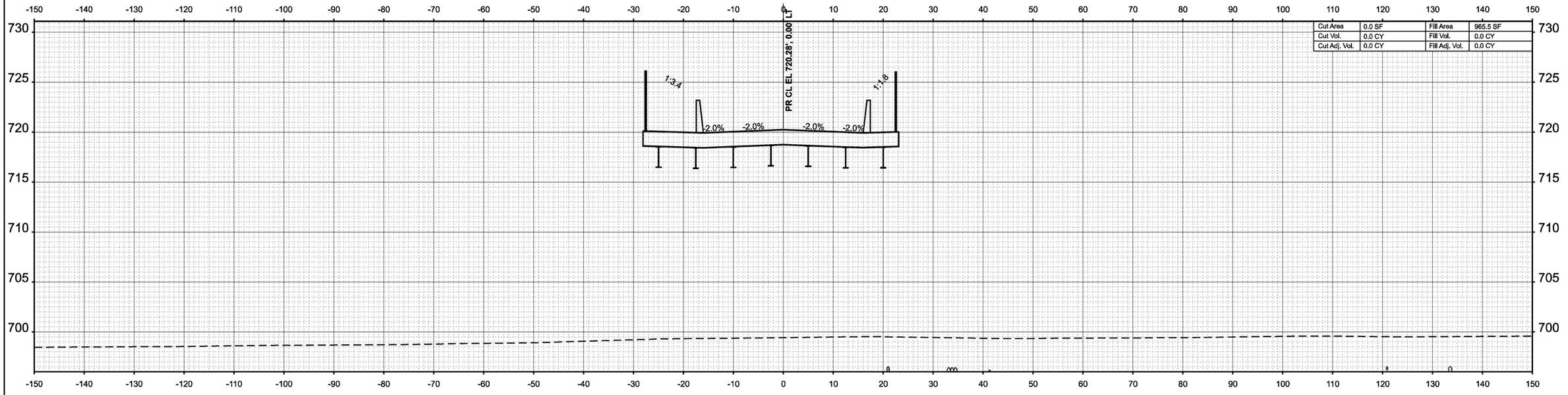

Cut Area	0.0 SF	Fill Area	965.5 SF
Cut Vol.	0.0 CY	Fill Vol.	0.0 CY
Cut Adj. Vol.	0.0 CY	Fill Adj. Vol.	0.0 CY

STA 299+50.00

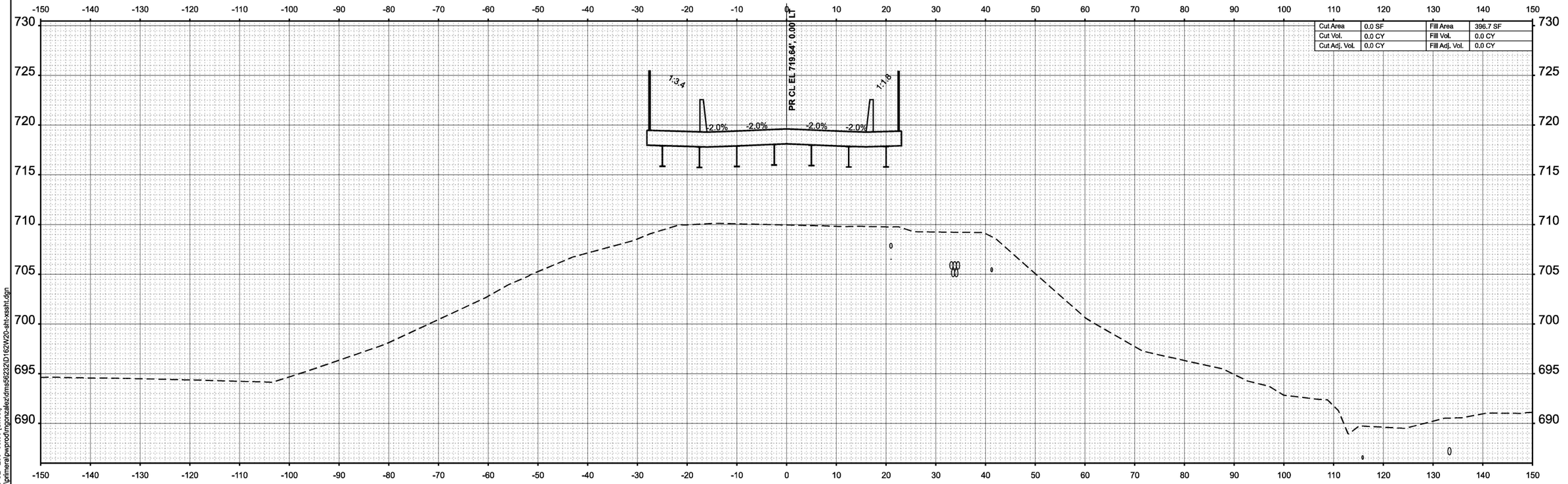

Cut Area	0.0 SF	Fill Area	396.7 SF
Cut Vol.	0.0 CY	Fill Vol.	0.0 CY
Cut Adj. Vol.	0.0 CY	Fill Adj. Vol.	0.0 CY

STA 299+00.00

MODEL: PR Oak Park Ave CL - 299+00.00 [Sheet]
FILE NAME: c:\pwworking\primera\pwprod\mgonzalez\dms56232\D162W20-sht-xssht.dgn

Primera
650 W. JACKSON BLVD. SUITE 600 . CHICAGO IL 60661 P:312-686-0910 F:312-686-0415

USER NAME = MGonzalez	DESIGNED -	REVISED -	
	DRAWN -	REVISED -	
	CHECKED -	REVISED -	
PLOT DATE = 5/4/2026	DATE -	REVISED -	

STATE OF ILLINOIS
DEPARTMENT OF TRANSPORTATION

CROSS SECTIONS

SCALE: 1"=10' | SHEET 17 OF 30 SHEETS | STA. | TO STA.

F.A.I RTE.	SECTION	COUNTY	TOTAL SHEETS	SHEET NO.
80	FAI 80 23 Bridge Replacement 2	COOK	158	128
		CONTRACT NO. 62W20		
		ILLINOIS	FED. AID PROJECT	

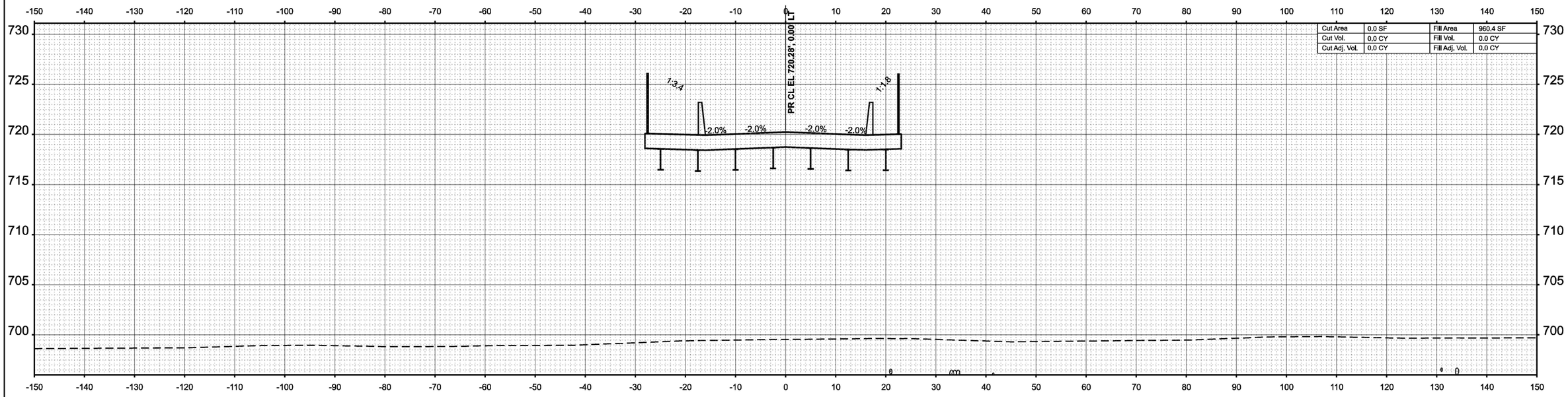

STA 300+50.00

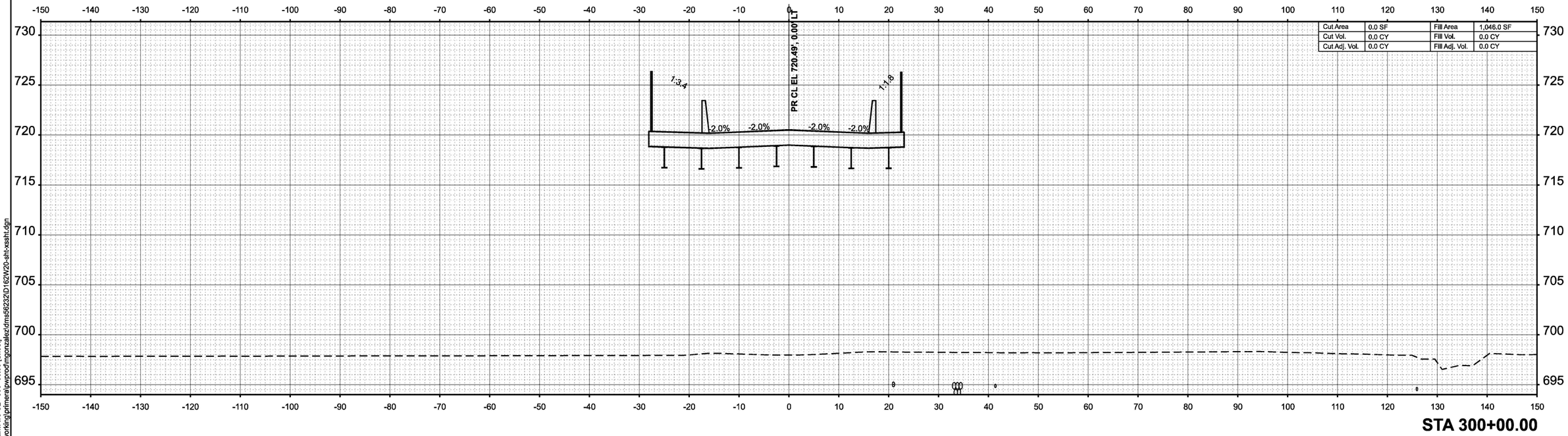

STA 300+00.00

MODEL: PR Oak Park Ave CL - 300+00.00 [Sheet]
FILE NAME: c:\pwworking\primera\pwprod\mgonzalez\dms56232\D162W20-sht-xssht.dgn

Primera
650 W. JACKSON BLVD. SUITE 630 . CHICAGO IL 60661 P:312-986-0910 F:312-986-0915

USER NAME = MGonzalez	DESIGNED -	REVISED -
	DRAWN -	REVISED -
	CHECKED -	REVISED -
PLOT DATE = 5/4/2026	DATE -	REVISED -

STATE OF ILLINOIS
DEPARTMENT OF TRANSPORTATION

CROSS SECTIONS

SCALE: 1"=10' | SHEET 18 OF 30 SHEETS | STA. | TO STA.

F.A.I RTE.	SECTION	COUNTY	TOTAL SHEETS	SHEET NO.
80	FAI 80 23 Bridge Replacement 2	COOK	158	129
		CONTRACT NO. 62W20		
	ILLINOIS | FED. AID PROJECT			

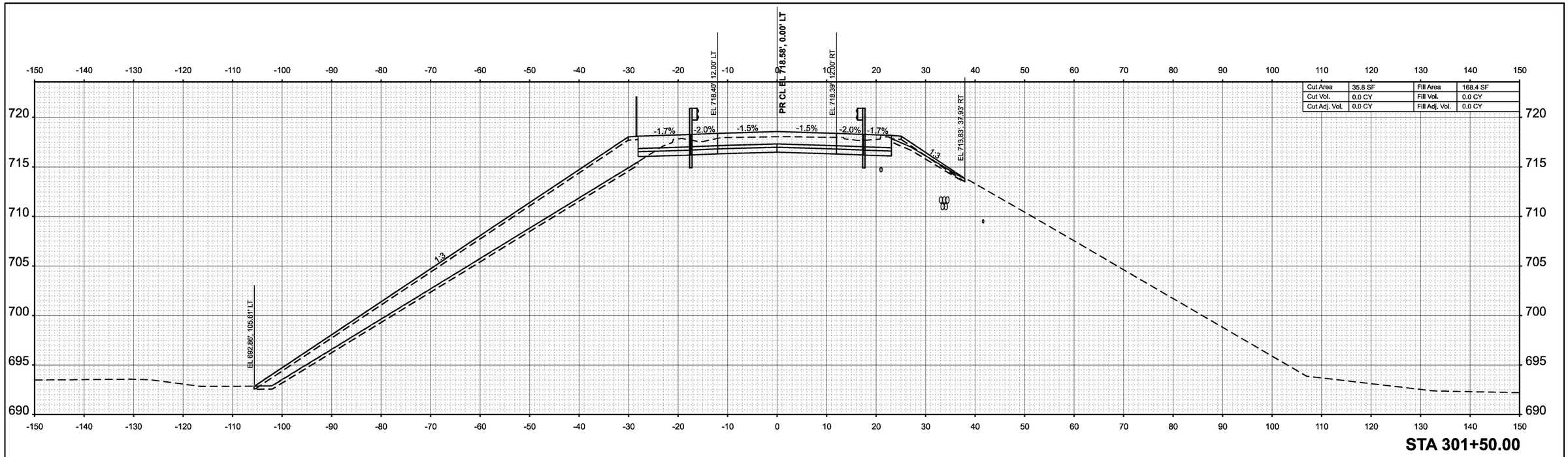

Cut Area	35.8 SF	Fill Area	168.4 SF
Cut Vol.	0.0 CY	Fill Vol.	0.0 CY
Cut Adj. Vol.	0.0 CY	Fill Adj. Vol.	0.0 CY

STA 301+50.00

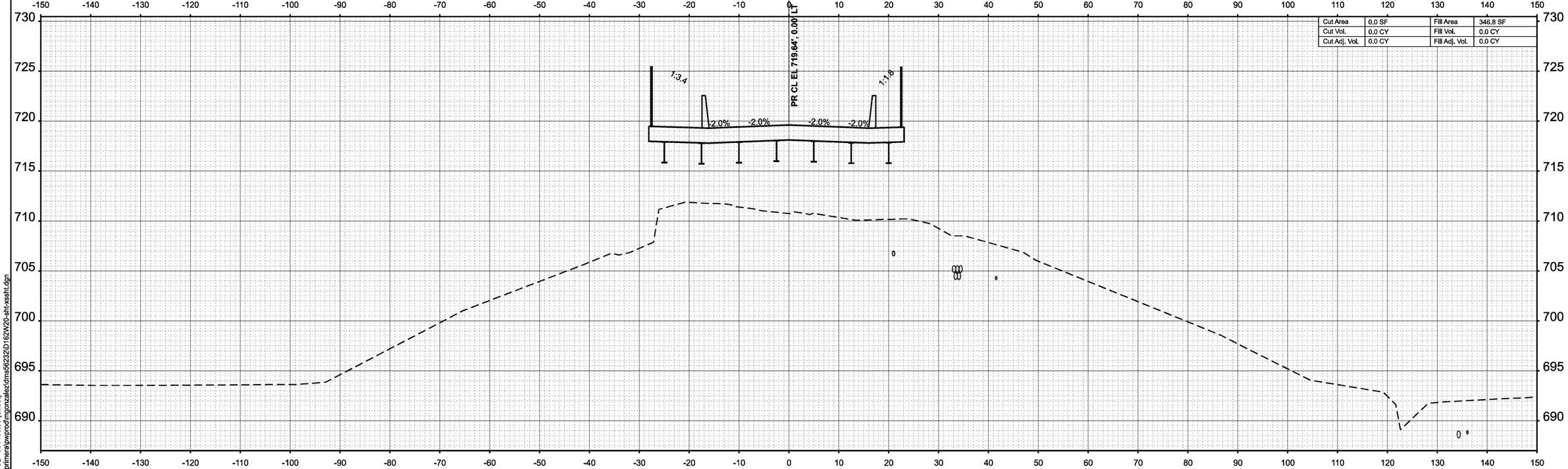

Cut Area	0.0 SF	Fill Area	346.8 SF
Cut Vol.	0.0 CY	Fill Vol.	0.0 CY
Cut Adj. Vol.	0.0 CY	Fill Adj. Vol.	0.0 CY

STA 301+00.00

MODEL: PR Oak Park Ave CL - 301+00.00 [Sheet]
FILE NAME: c:\pwworking\primera\pwprod\mgonzalez\dms56232\D162W20-sht-xssht.dgn

Primera
650 W. JACKSON BLVD. SUITE 600 . CHICAGO IL 60661 P:312-686-0910 F:312-686-0415

USER NAME = MGonzalez	DESIGNED -	REVISED -	
	DRAWN -	REVISED -	
	CHECKED -	REVISED -	
PLOT DATE = 5/4/2026	DATE -	REVISED -	

STATE OF ILLINOIS
DEPARTMENT OF TRANSPORTATION

CROSS SECTIONS

SCALE: 1"=10' | SHEET 19 OF 30 SHEETS | STA. | TO STA.

F.A.I RTE.	SECTION	COUNTY	TOTAL SHEETS	SHEET NO.
80	FAI 80 23 Bridge Replacement 2	COOK	158	130
		CONTRACT NO. 62W20		
		ILLINOIS	FED. AID PROJECT	

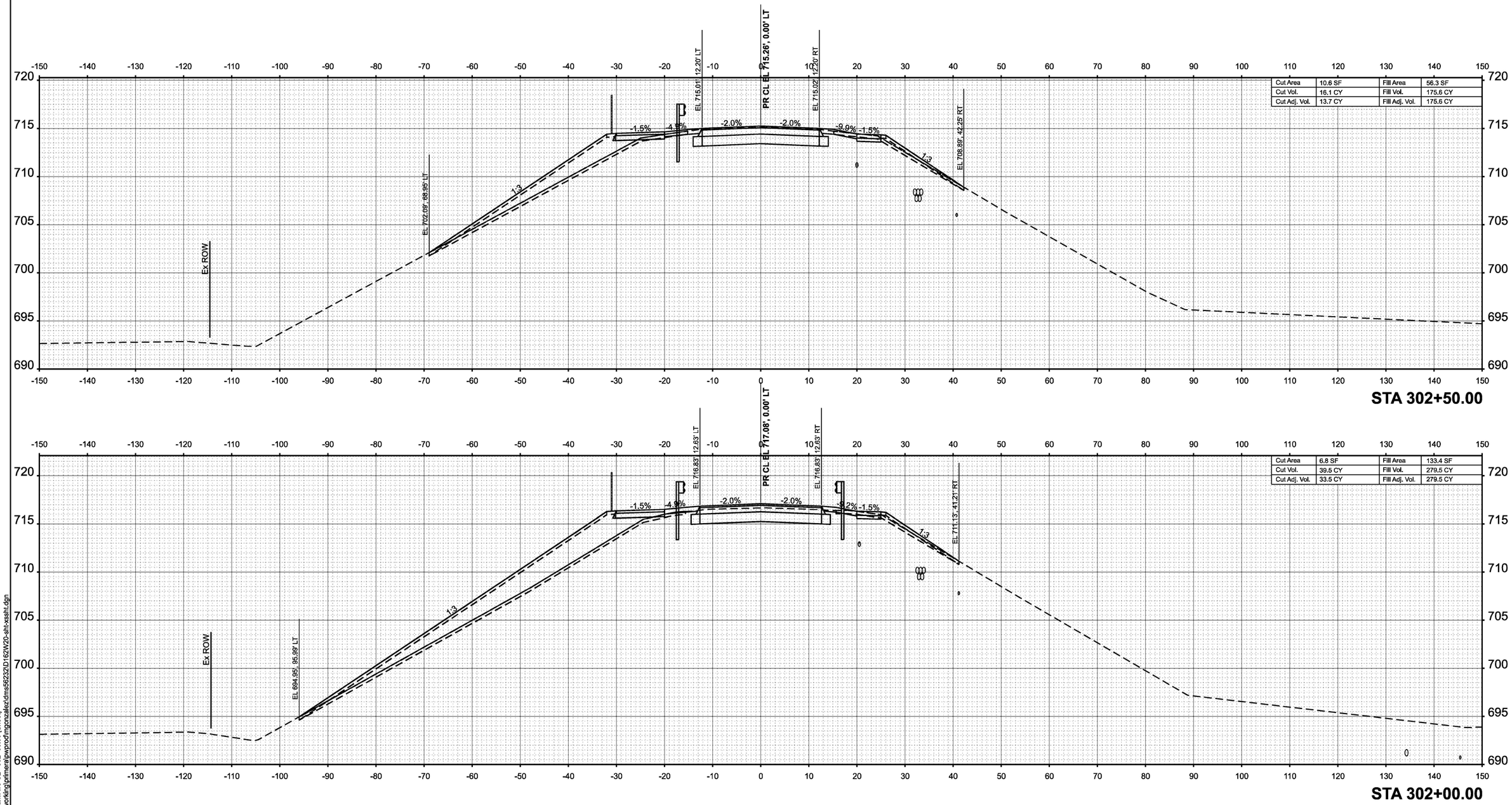

MODEL: PR Oak Park Ave CL - 302+00.00 [Sheet]
FILE NAME: c:\pwworking\primera\pwprod\mgonzalez\dms56223\D1162W20-sht-xssht.dgn

Primera
650 W. JACKSON BLVD. SUITE 630 . CHICAGO IL 60661 P:312-986-0810 F:312-986-0815

USER NAME = MGonzalez	DESIGNED -	REVISED -
	DRAWN -	REVISED -
	CHECKED -	REVISED -
PLOT DATE = 5/4/2026	DATE -	REVISED -

STATE OF ILLINOIS
DEPARTMENT OF TRANSPORTATION

CROSS SECTIONS

SCALE: 1"=10' | SHEET 20 OF 30 SHEETS | STA. | TO STA.

F.A.I RTE.	SECTION	COUNTY	TOTAL SHEETS	SHEET NO.
80	FAI 80 23 Bridge Replacement 2	COOK	158	131
		CONTRACT NO. 62W20		
	ILLINOIS FED. AID PROJECT			

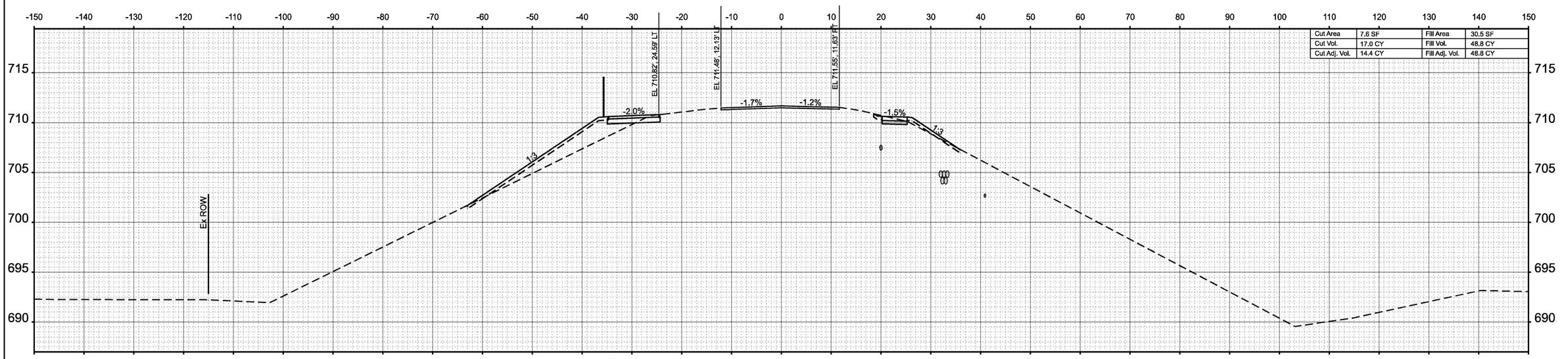

STA 303+50.00

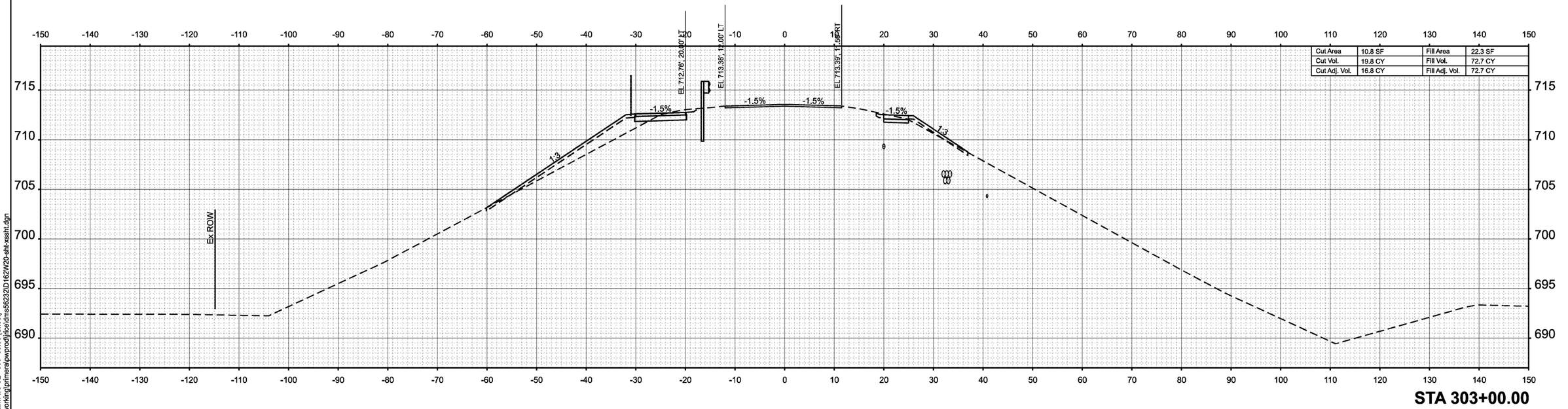

STA 303+00.00

MODEL: PR Oak Park Ave CL - 303+00.00 [Sheet]
FILE NAME: c:\pwworking\ptmeral\pwprod\jfice\dms58222\D162W20-sht-xssht.dgn

Primera
550 W. JACKSON BLVD. SUITE 830 CHICAGO IL 60661 P:312-686-0810 F:312-686-0415

USER NAME = jrice	DESIGNED -	REVISED -	
	DRAWN -	REVISED -	
	CHECKED -	REVISED -	
PLOT DATE = 5/5/2026	DATE -	REVISED -	

STATE OF ILLINOIS
DEPARTMENT OF TRANSPORTATION

CROSS SECTIONS

SCALE: 1"=10' | SHEET 21 OF 30 SHEETS | STA. | TO STA.

F.A.I RTE.	SECTION	COUNTY	TOTAL SHEETS	SHEET NO.
80	FAI 80 23 Bridge Replacement 2	COOK	158	132
		CONTRACT NO. 62W20		
	ILLINOIS FED. AID PROJECT			

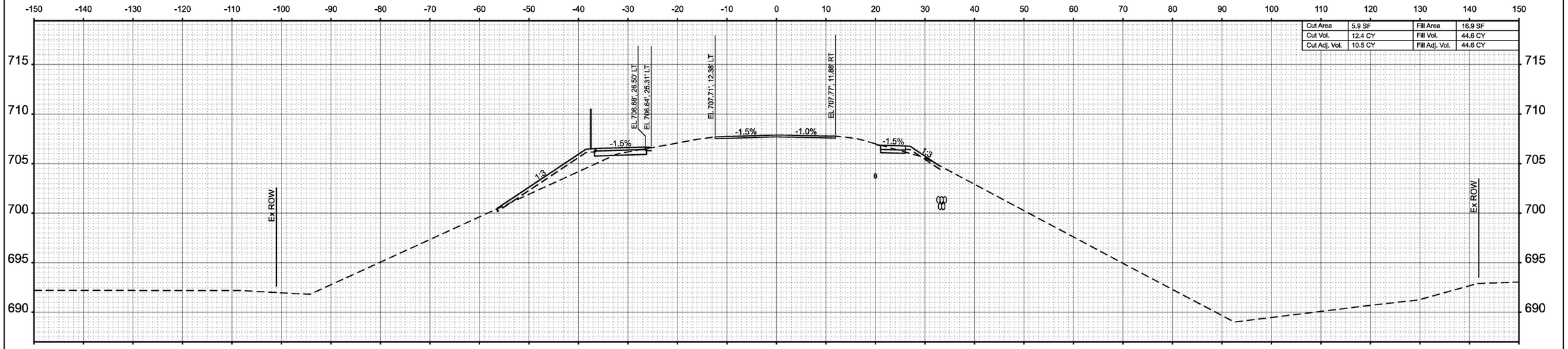

STA 304+50.00

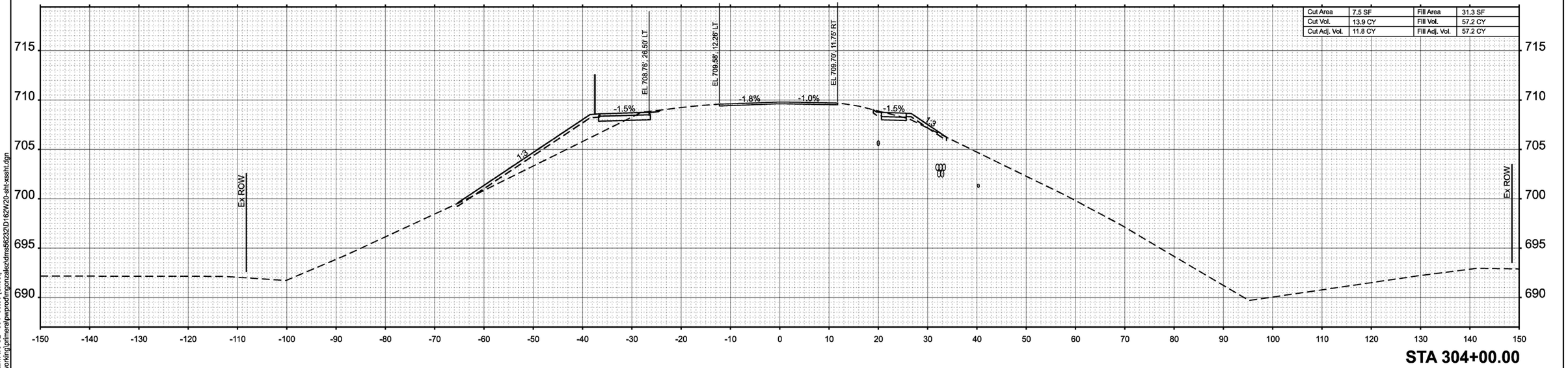

STA 304+00.00

MODEL: PR Oak Park Ave CL - 304+00.00 [Sheet]
FILE NAME: c:\pwworking\gtrimera\pwprod\mgonzalez\dms56232\D162W20-sht-xssht.dgn

Primera
550 W. JACKSON BLVD. SUITE 830 CHICAGO IL 60661 P:312-686-0810 F:312-686-0415

USER NAME = MGonzalez	DESIGNED -	REVISED -	
	DRAWN -	REVISED -	
	CHECKED -	REVISED -	
PLOT DATE = 5/4/2026	DATE -	REVISED -	

STATE OF ILLINOIS
DEPARTMENT OF TRANSPORTATION

CROSS SECTIONS

SCALE: 1"=10' | SHEET 22 OF 30 SHEETS | STA. | TO STA.

F.A.I RTE.	SECTION	COUNTY	TOTAL SHEETS	SHEET NO.
80	FAI 80 23 Bridge Replacement 2	COOK	158	133
		CONTRACT NO. 62W20		
	ILLINOIS FED. AID PROJECT			

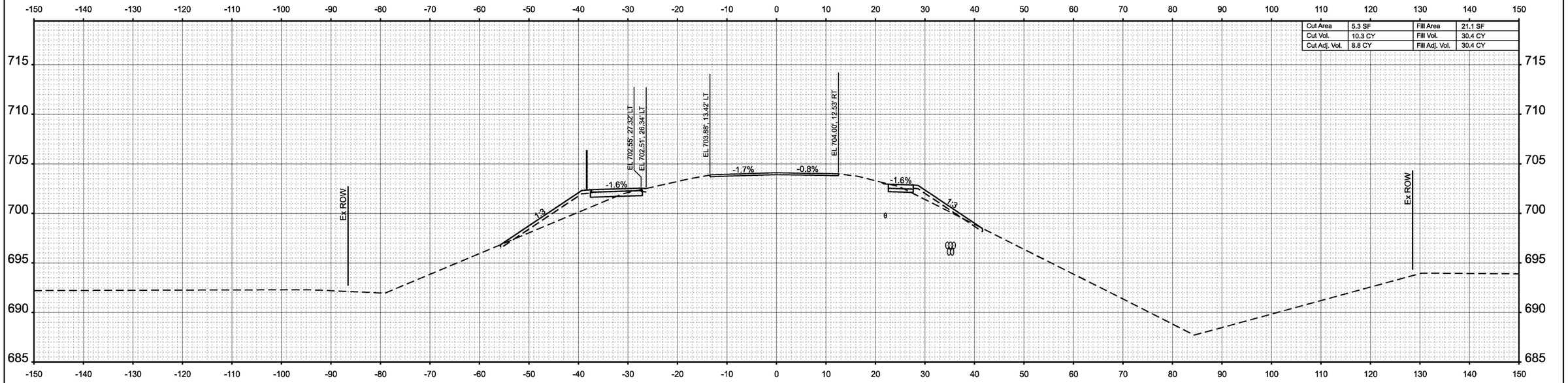

STA 305+50.00

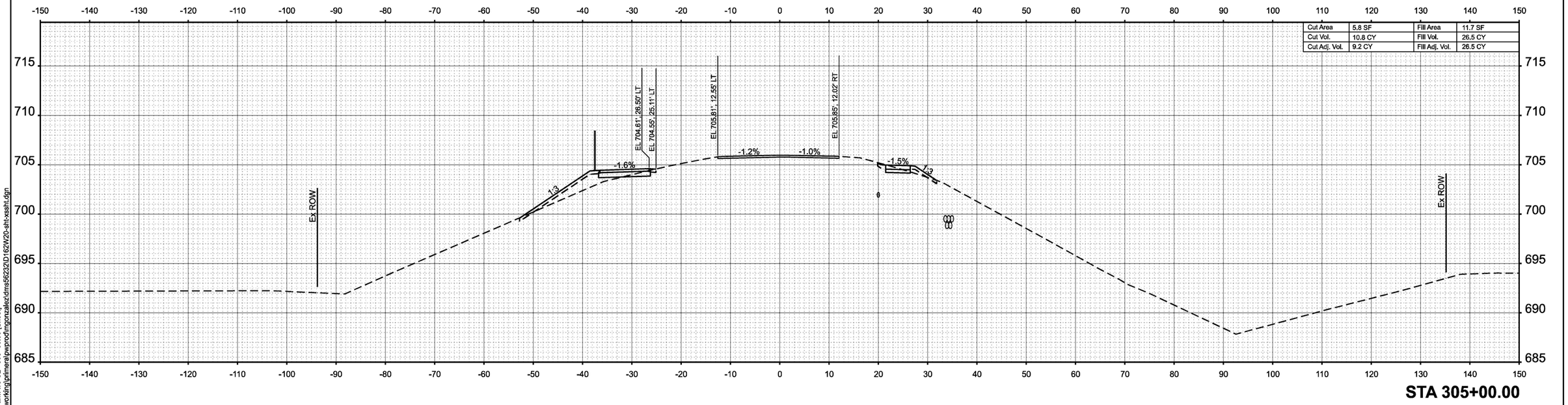

STA 305+00.00

MODEL: PR Oak Park Ave CL - 305+00.00 [Sheet]
FILE NAME: c:\pwworking\primera\pwprod\mgonzalez\dms56232\D162W20-sht-xssht.dgn

Primera
650 W. JACKSON BLVD. SUITE 630 . CHICAGO IL 60661 P:312-986-9910 F:312-986-9415

USER NAME = MGonzalez	DESIGNED -	REVISED -
	DRAWN -	REVISED -
	CHECKED -	REVISED -
PLOT DATE = 5/4/2026	DATE -	REVISED -

STATE OF ILLINOIS
DEPARTMENT OF TRANSPORTATION

CROSS SECTIONS

SCALE: 1"=10' | SHEET 23 OF 30 SHEETS | STA. | TO STA.

F.A.I RTE.	SECTION	COUNTY	TOTAL SHEETS	SHEET NO.
80	FAI 80 23 Bridge Replacement 2	COOK	158	134
		CONTRACT NO. 62W20		
	ILLINOIS FED. AID PROJECT			

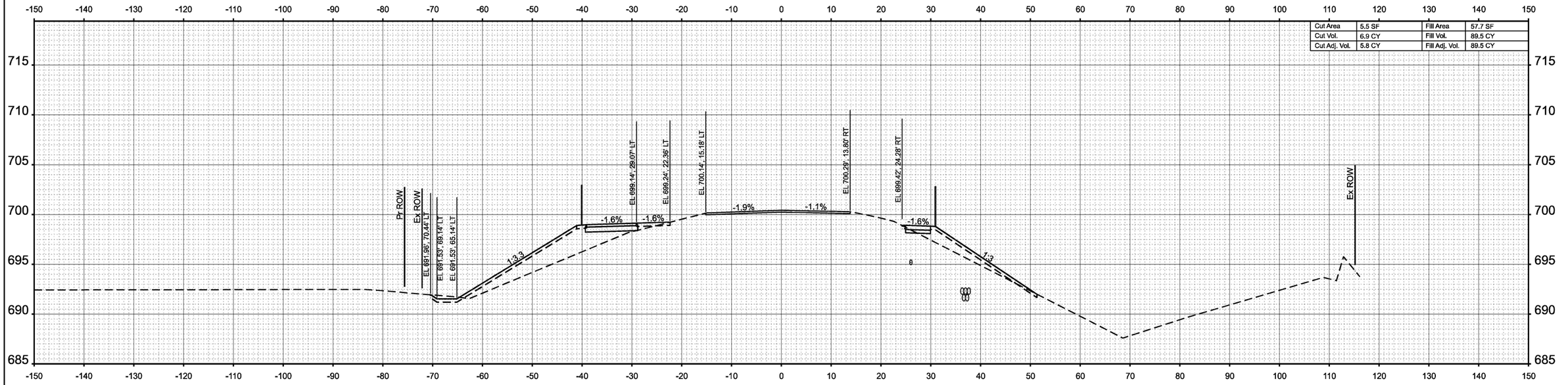

STA 306+50.00

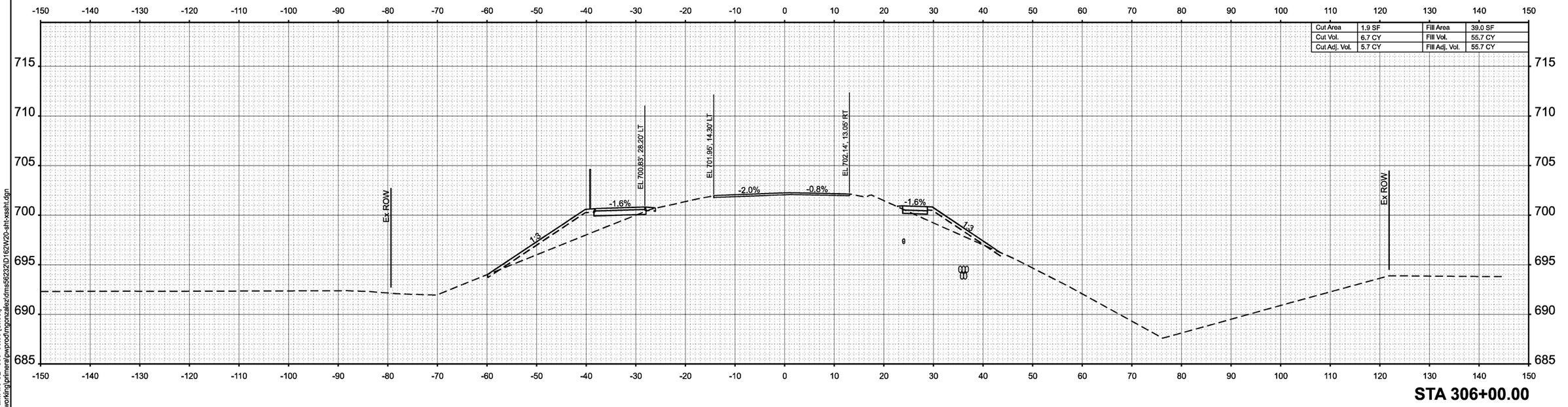

STA 306+00.00

MODEL: PR Oak Park Ave CL - 306+00.00 [Sheet]
FILE NAME: c:\pwworking\primera\pwprod\mgonzalez\dms56232\D162W20-sht-xssht.dgn

Primera
650 W. JACKSON BLVD. SUITE 630 . CHICAGO IL 60661 P:312-986-9910 F:312-986-9415

USER NAME = MGonzalez	DESIGNED -	REVISED -
	DRAWN -	REVISED -
	CHECKED -	REVISED -
PLOT DATE = 5/4/2026	DATE -	REVISED -

STATE OF ILLINOIS
DEPARTMENT OF TRANSPORTATION

CROSS SECTIONS

SCALE: 1"=10' | SHEET 24 OF 30 SHEETS | STA. | TO STA.

F.A.I RTE.	SECTION	COUNTY	TOTAL SHEETS	SHEET NO.
80	FAI 80 23 Bridge Replacement 2	COOK	158	135
		CONTRACT NO. 62W20		
	ILLINOIS FED. AID PROJECT			

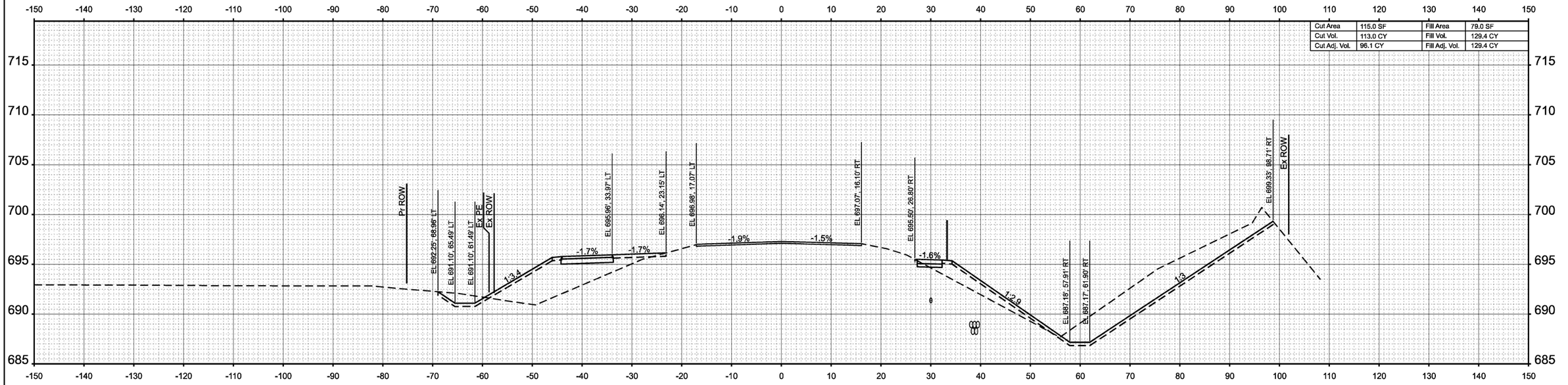

MODEL: PR Oak Park Ave CL - 307+00.00 [Sheet]
FILE NAME: c:\pwworking\primera\pwprod\mgonzalez\dms56232\D162W20-sht-xssht.dgn

Primera
650 W. JACKSON BLVD. SUITE 630 . CHICAGO IL 60661 P:312-986-9910 F:312-986-9415

USER NAME = MGonzalez	DESIGNED -	REVISED -
	DRAWN -	REVISED -
	CHECKED -	REVISED -
PLOT DATE = 5/4/2026	DATE -	REVISED -

STATE OF ILLINOIS
DEPARTMENT OF TRANSPORTATION

CROSS SECTIONS

SCALE: 1"=10' | SHEET 25 OF 30 SHEETS | STA. | TO STA.

F.A.I RTE.	SECTION	COUNTY	TOTAL SHEETS	SHEET NO.
80	FAI 80 23 Bridge Replacement 2	COOK	158	136
		CONTRACT NO. 62W20		
	ILLINOIS FED. AID PROJECT			

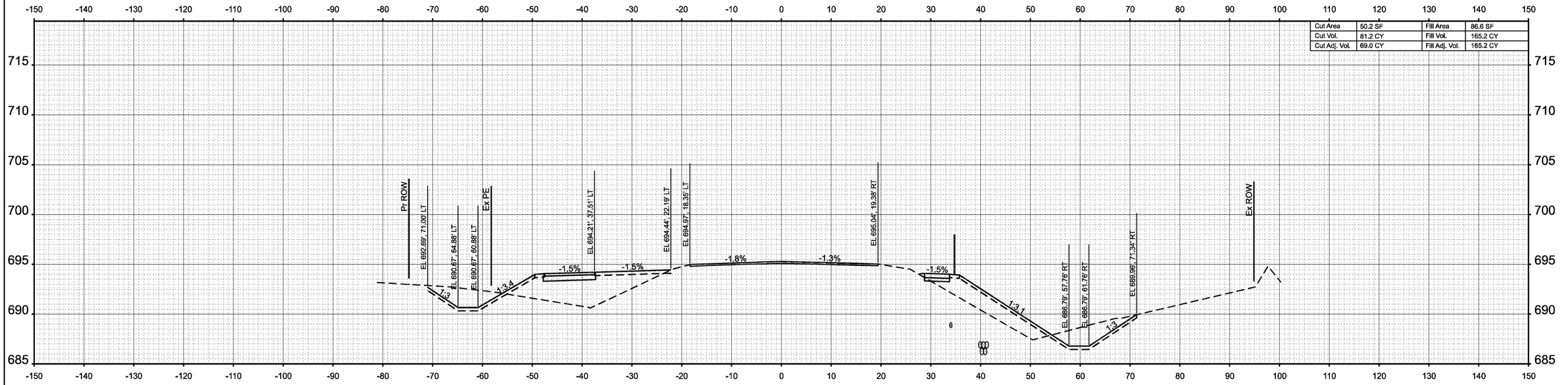

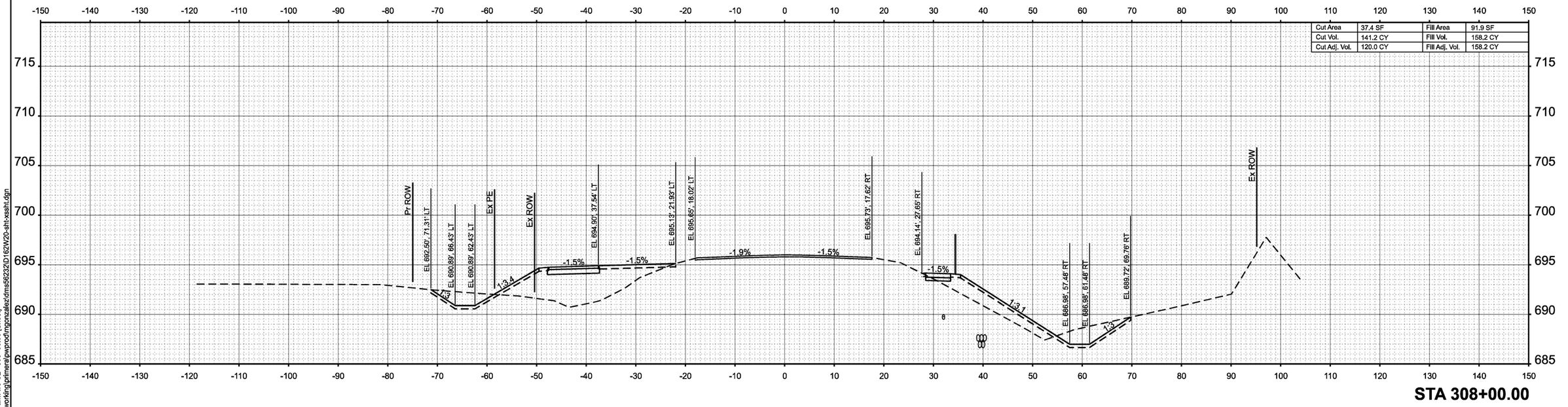

MODEL: PR Oak Park Ave CL - 308+00.00 [Sheet]
FILE NAME: c:\pwworking\primera\pwprod\mgonzalez\dms52232\D162W20-sht-xssht.dgn

Primera
650 W. JACKSON BLVD. SUITE 630 . CHICAGO IL 60661 P:312-986-9910 F:312-986-9415

USER NAME = MGonzalez	DESIGNED -	REVISED -	
	DRAWN -	REVISED -	
	CHECKED -	REVISED -	
PLOT DATE = 5/4/2026	DATE -	REVISED -	

STATE OF ILLINOIS
DEPARTMENT OF TRANSPORTATION

CROSS SECTIONS

SCALE: 1"=10' | SHEET 26 OF 30 SHEETS | STA. | TO STA.

F.A.I RTE.	SECTION	COUNTY	TOTAL SHEETS	SHEET NO.
80	FAI 80 23 Bridge Replacement 2	COOK	158	137
		CONTRACT NO. 62W20		
	ILLINOIS FED. AID PROJECT			

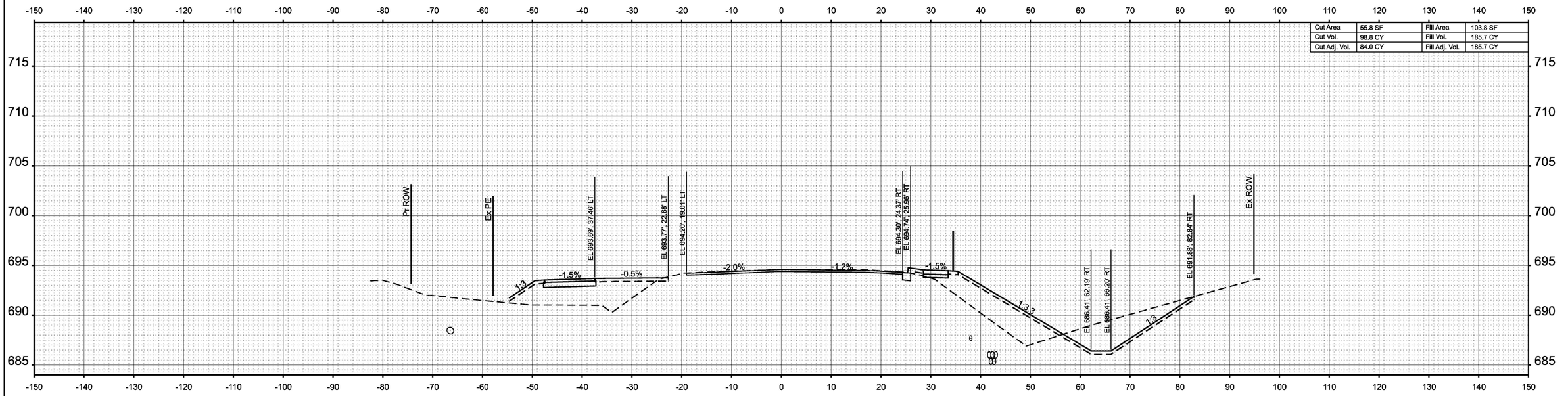

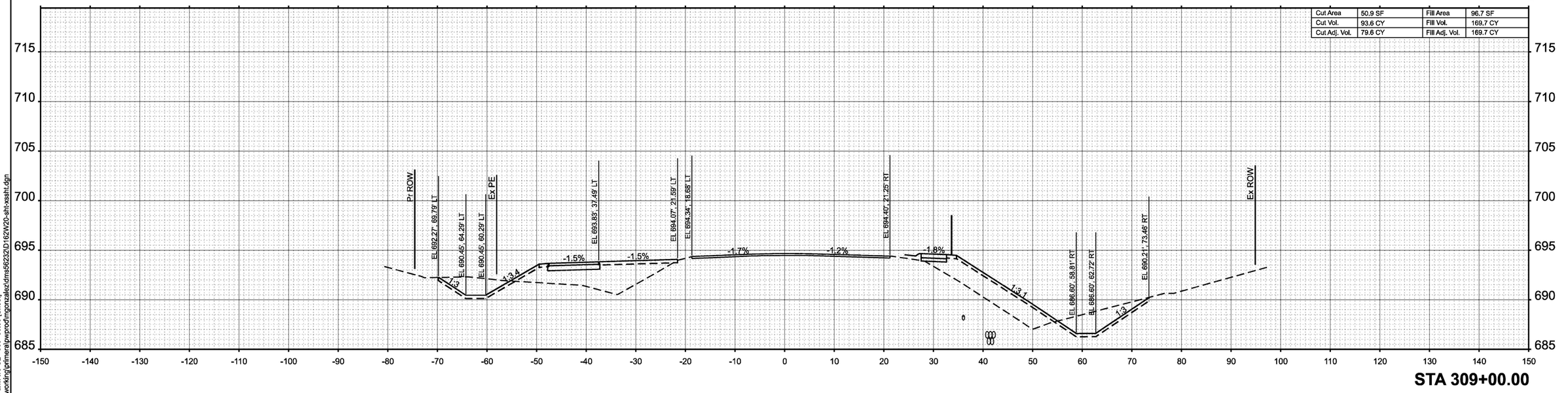

MODEL: PR Oak Park Ave CL - 309+00.00 [Sheet]
FILE NAME: c:\pwworking\primera\pwprod\mgonzalez\dms56232\D162W20-sht-xssht.dgn

Primera
650 W. JACKSON BLVD. SUITE 630 . CHICAGO IL 60661 P:312-986-9910 F:312-986-9415

USER NAME = MGonzalez	DESIGNED -	REVISED -
	DRAWN -	REVISED -
	CHECKED -	REVISED -
PLOT DATE = 5/4/2026	DATE -	REVISED -

STATE OF ILLINOIS
DEPARTMENT OF TRANSPORTATION

CROSS SECTIONS

SCALE: 1"=10' | SHEET 27 OF 30 SHEETS | STA. | TO STA.

F.A.I RTE.	SECTION	COUNTY	TOTAL SHEETS	SHEET NO.
80	FAI 80 23 Bridge Replacement 2	COOK	158	138
		CONTRACT NO. 62W20		
	ILLINOIS FED. AID PROJECT			

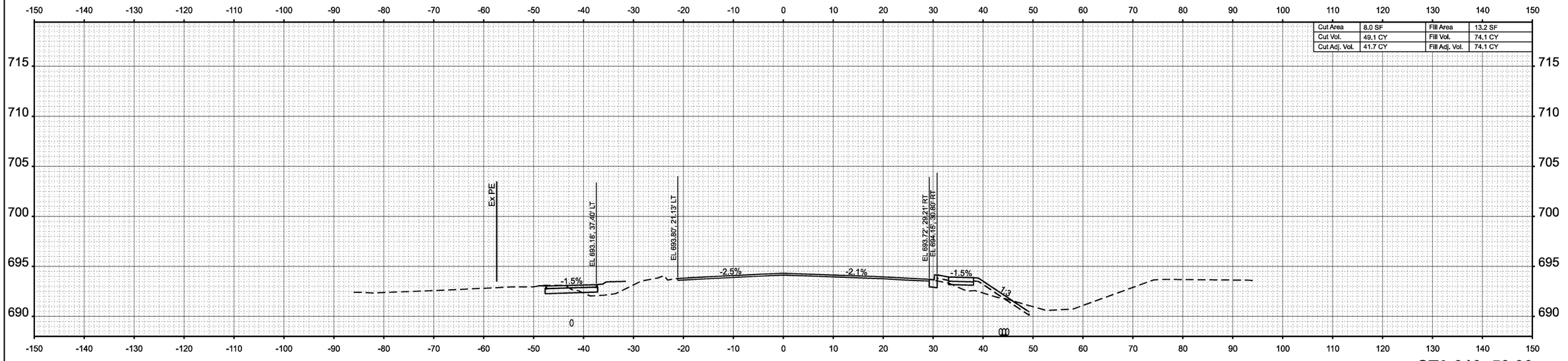

Cut Area	8.0 SF	Fill Area	13.2 SF
Cut Vol.	49.1 CY	Fill Vol.	74.1 CY
Cut Adj. Vol.	41.7 CY	Fill Adj. Vol.	74.1 CY

STA 310+50.00

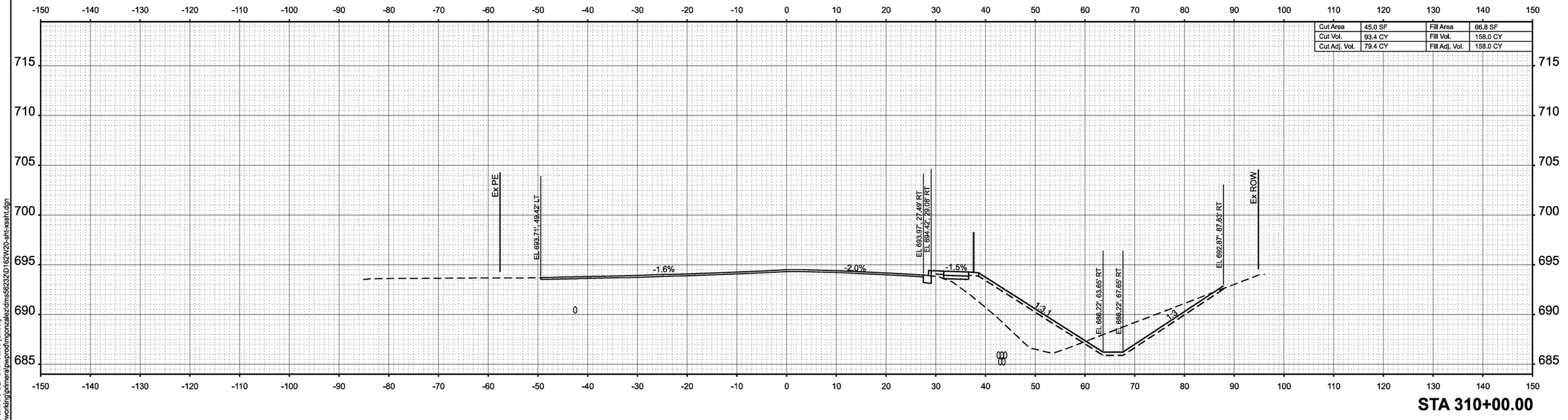

Cut Area	45.0 SF	Fill Area	66.8 SF
Cut Vol.	93.4 CY	Fill Vol.	158.0 CY
Cut Adj. Vol.	79.4 CY	Fill Adj. Vol.	158.0 CY

STA 310+00.00

MODEL: PR Oak Park Ave CL - 310+00.00 [Sheet]
FILE NAME: c:\pwworking\primera\pwprod\mgonzalez\dms56232\D162W20-sht-xssht.dgn

Primera
650 W. JACKSON BLVD. SUITE 600 . CHICAGO IL 60661 P:312-686-0910 F:312-686-0415

USER NAME = MGonzalez	DESIGNED -	REVISED -	
	DRAWN -	REVISED -	
	CHECKED -	REVISED -	
PLOT DATE = 5/4/2026	DATE -	REVISED -	

STATE OF ILLINOIS
DEPARTMENT OF TRANSPORTATION

CROSS SECTIONS

SCALE: 1"=10' | SHEET 28 OF 30 SHEETS | STA. | TO STA.

F.A.I RTE.	SECTION	COUNTY	TOTAL SHEETS	SHEET NO.
80	FAI 80 23 Bridge Replacement 2	COOK	158	139
		CONTRACT NO. 62W20		
		ILLINOIS	FED. AID PROJECT	

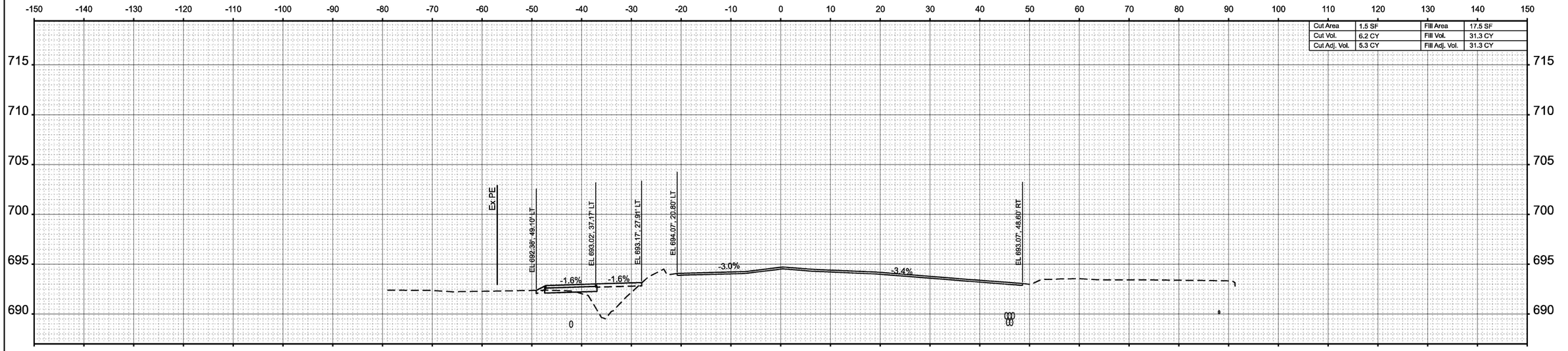

STA 311+50.00

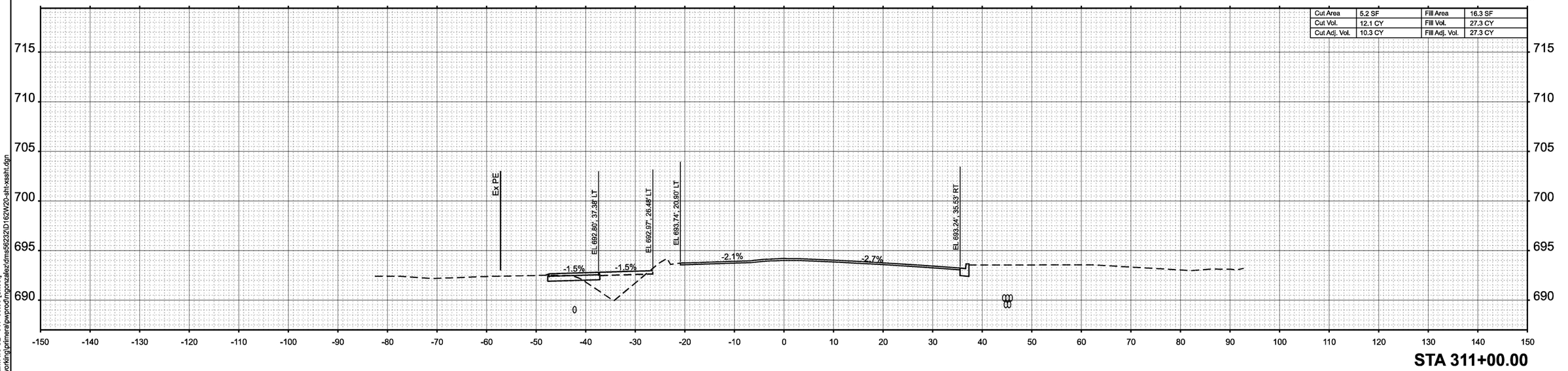

STA 311+00.00

MODEL: PR Oak Park Ave CL - 311+00.00 [Sheet]
FILE NAME: c:\pwworking\gtrimera\pwprod\mgonzalez\dms56232\D162W20-sht-xssht.dgn

Primera
550 W. JACKSON BLVD. SUITE 830 CHICAGO IL 60661 P:312-686-0810 F:312-686-0415

USER NAME = MGonzalez	DESIGNED -	REVISED -	
	DRAWN -	REVISED -	
	CHECKED -	REVISED -	
PLOT DATE = 5/4/2026	DATE -	REVISED -	

STATE OF ILLINOIS
DEPARTMENT OF TRANSPORTATION

CROSS SECTIONS

SCALE: 1"=10' | SHEET 29 OF 30 SHEETS | STA. | TO STA.

F.A.I RTE.	SECTION	COUNTY	TOTAL SHEETS	SHEET NO.
80	FAI 80 23 Bridge Replacement 2	COOK	158	140
		CONTRACT NO. 62W20		
	ILLINOIS FED. AID PROJECT			

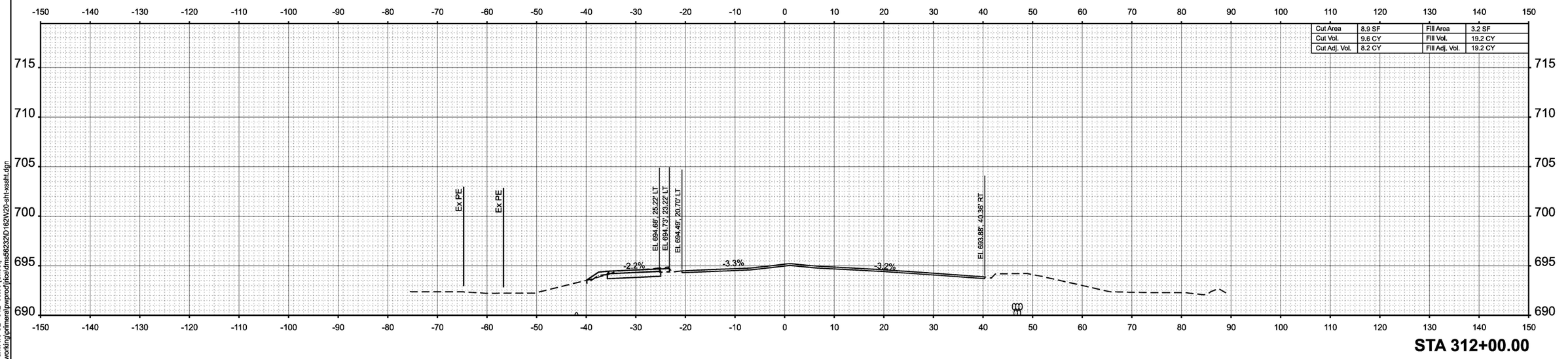

Cut Area	8.9 SF	Fill Area	3.2 SF
Cut Vol.	9.6 CY	Fill Vol.	19.2 CY
Cut Adj. Vol.	8.2 CY	Fill Adj. Vol.	19.2 CY

STA 312+00.00

MODEL: PR Oak Park Ave CL - 312+00.00 [Sheet]
FILE NAME: c:\pwworking\primera\pwprod\jrice\dms56232\D162W20-sht-xssht.dgn

Primera
656 W. JACKSON BLVD. SUITE 628 . CHICAGO IL 60661 P:312-986-9910 F:312-986-9415

USER NAME = jrice	DESIGNED -	REVISED -
	DRAWN -	REVISED -
	CHECKED -	REVISED -
PLOT DATE = 5/5/2026	DATE -	REVISED -

STATE OF ILLINOIS
DEPARTMENT OF TRANSPORTATION

CROSS SECTIONS

SCALE: 1"=10' | SHEET 30 OF 30 SHEETS | STA. | TO STA.

F.A.I RTE.	SECTION	COUNTY	TOTAL SHEETS	SHEET NO.
80	FAI 80 23 Bridge Replacement 2	COOK	158	141
		CONTRACT NO. 62W20		
	ILLINOIS FED. AID PROJECT			

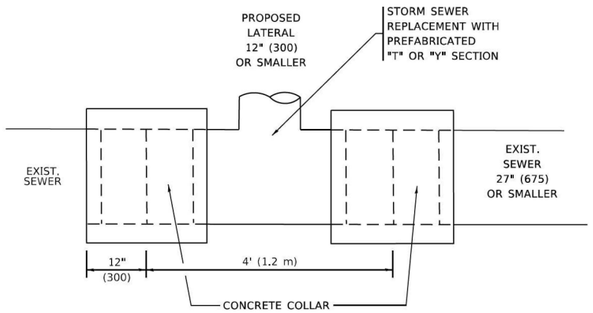

DETAIL "A"

LATERAL CONNECTION TO EXISTING SEWER
OF 27" (675) OR SMALLER

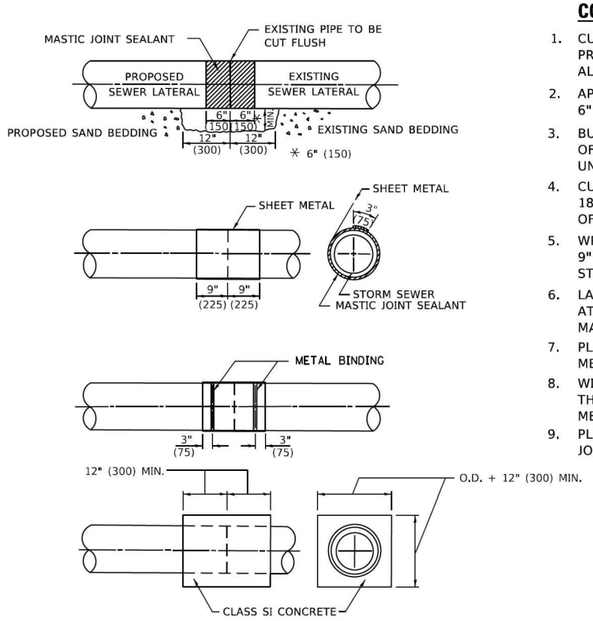

DETAIL "B"

CLASS SI CONCRETE COLLAR

CONSTRUCTION SEQUENCE

1. CUT THE EXISTING END OF THE PIPE SO AS TO PRESENT A FLUSH BUTT JOINT. BRUSH AND CLEAN ALL PIPES.
2. APPLY THE MASTIC JOINT SEALANT TO THE FIRST 6" (150) OF EACH PIPE.
3. BUTT THE PIPES TOGETHER LEAVING A MINIMUM OF 12' x 6' (300 x 150) DEEP EXCAVATION UNDER AND AROUND EACH PIPE END.
4. CUT A PIECE OF SHEET METAL GAGE NO. 19 1.1 (0.0418) 18" (450) WIDE BY THE OUTSIDE CIRCUMFERANCE OF THE PIPE PLUS 3" (75) LONG.
5. WRAP THE SHEET METAL AROUND THE PIPES, 9" (225) ON EACH SIDE OF THE JOINT, STARTING AT THE TOP OF THE PIPE.
6. LAP THE SHEET METAL AT LEAST 3" (75) AT THE TOP OF THE PIPE AND PLACE THE MASTIC JOINT SEALANT BETWEEN THE LAP.
7. PLACE TWO METAL BANDS AROUND THE SHEET METAL AND TIGHTEN.
8. WIPE OFF ANY EXCESS MASTIC JOINT SEALANT THAT OOZES OUT FROM BETWEEN THE SHEET METAL AND THE PIPES.
9. PLACE CLASS SI CONCRETE AROUND THE JOINT.

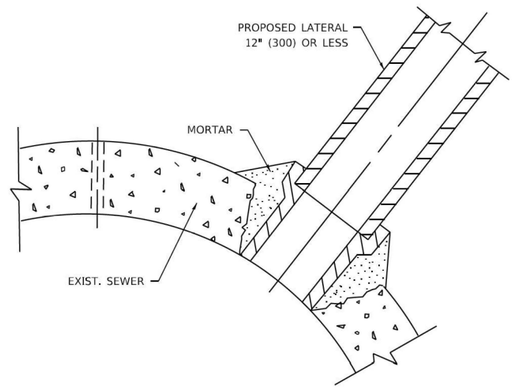

DETAIL "C"

PROPOSED LATERAL
CONNECTION TO EXISTING SEWER
OF 30" (750) OR LARGER

NOTES:

MATERIAL

MATERIAL USED FOR THE TEE OR WYE SECTION SHALL BE COMPATIBLE WITH THE EXISTING STORM SEWER OR THE PROPOSED STORM SEWER.

CONSTRUCTION METHODS

I. THIS WORK SHALL BE CONSTRUCTED IN CONFORMANCE WITH THE APPLICABLE PORTIONS OF SECTION 550 OF THE STANDARD SPECIFICATIONS.

II. CONNECTION TO AN EXISTING STORM SEWER SHALL BE BY EITHER OF THE FOLLOWING METHODS:
- A) PROPOSED STORM SEWER CONNECTION TO EXISTING SEWER OF 27" (675) OR SMALLER SEE DETAIL "A" AND "B".
- B) PROPOSED STORM SEWER CONNECTION TO EXISTING SEWER OF 30" (750) OR LARGER SEE DETAIL "C".

IF THE EXISTING SEWER PIPE IS CRACKED, BROKEN OR OTHERWISE DAMAGED BY THE CONTRACTOR IN MAKING THE CIRCULAR OPENING, THE CONTRACTOR SHALL REPLACE THAT SECTION OF PIPE WITH PIPE EQUAL AND SIMILAR IN ALL RESPECTS TO THE PIPE IN THE EXISTING SEWER, IN A CAREFUL WORKMANLIKE MANNER, WITHOUT EXTRA COMPENSATION.

GENERAL

1. CARE MUST BE TAKEN TO PREVENT DEBRIS FROM ENTERING THE SEWER. ALL DEBRIS WHICH ENTERS THE SEWER MUST BE REMOVED. THE SEWER MUST BE LEFT CLEAN AND UNOBSTRUCTED UPON COMPLETION OF THE CONTRACT.
2. CARE MUST BE TAKEN TO PREVENT ANY PART OF THE NEW PIPE CONNECTION FROM PROJECTING INTO THE EXISTING SEWER.

BASIS OF PAYMENT

1. TEE OR WYE CONNECTIONS SHALL BE PAID FOR AT THE CONTRACT UNIT PRICE EACH FOR STORM SEWER TEE OR WYE OF THE TYPE AND SIZE SPECIFIED IN THE PLANS, THIS PRICE SHALL INCLUDE ALL EXCAVATION OF THE TRENCH, REMOVAL OF THE EXISTING STORM SEWER, FURNISHING AND INSTALLING THE SPECIFIED TEE OR WYE SECTION, FURNISHING AND INSTALLING THE REQUIRED CONCRETE COLLAR, AND ALL OTHER MATERIAL NECESSARY TO COMPLETE THIS WORK AS SHOWN AND SPECIFIED.
2. REMOVAL AND REINSTALLATION OF EXISTING STORM SEWER ADJACENT TO THE PROPOSED TEE OR WYE SECTION, FOR THE PURPOSE OF FACILITATING THE INSTALLATION OF THE TEE OR WYE SECTION, WILL NOT BE PAID FOR SEPARATELY BUT SHALL BE INCLUDED IN THE UNIT PRICE BID FOR THE WORK.
3. TRENCH BACKFILL, EXCAVATION IN ROCK AND REMOVAL AND REPLACEMENT OF UNSUITABLE MATERIAL BELOW PLAN BEDDING GRADE WILL BE PAID FOR SEPARATELY.
4. CONCRETE COLLAR FOR CONNECTING A PROPOSED STORM SEWER TO AN EXISTING STORM SEWER WILL NOT BE PAID PAID FOR SEPARATELY BUT SHALL BE INCLUDED IN THE COST OF THE PROPOSED STORM SEWER.

* ALL DIMENSIONS ARE IN INCHES (MILLIMETERS) UNLESS OTHERWISE SHOWN.

USER NAME = Lawrence.DeManche	DESIGNED - M. DE YONG	REVISED - R. SHAH 09-09-94
	DRAWN -	REVISED - R. SHAH 10-25-94
PLOT SCALE = 100.0000 ' / in.	CHECKED -	REVISED - R. SHAH 06-12-96
PLOT DATE = 11/18/2022	DATE - 07-25-90	REVISED - K. SMITH 11-18-22

STATE OF ILLINOIS
DEPARTMENT OF TRANSPORTATION

DETAIL OF STORM SEWER CONNECTION TO EXISTING SEWER

SCALE: NONE | SHEET 1 OF 1 SHEETS | STA. | TO STA.

F.A.I RTE.	SECTION	COUNTY	TOTAL SHEETS	SHEET NO.
80	FAI 80 23 Bridge Replacement 2	COOK	158	142
	BD500–01 (BD–07)	CONTRACT NO. 62W20		
	ILLINOIS FED. AID PROJECT			

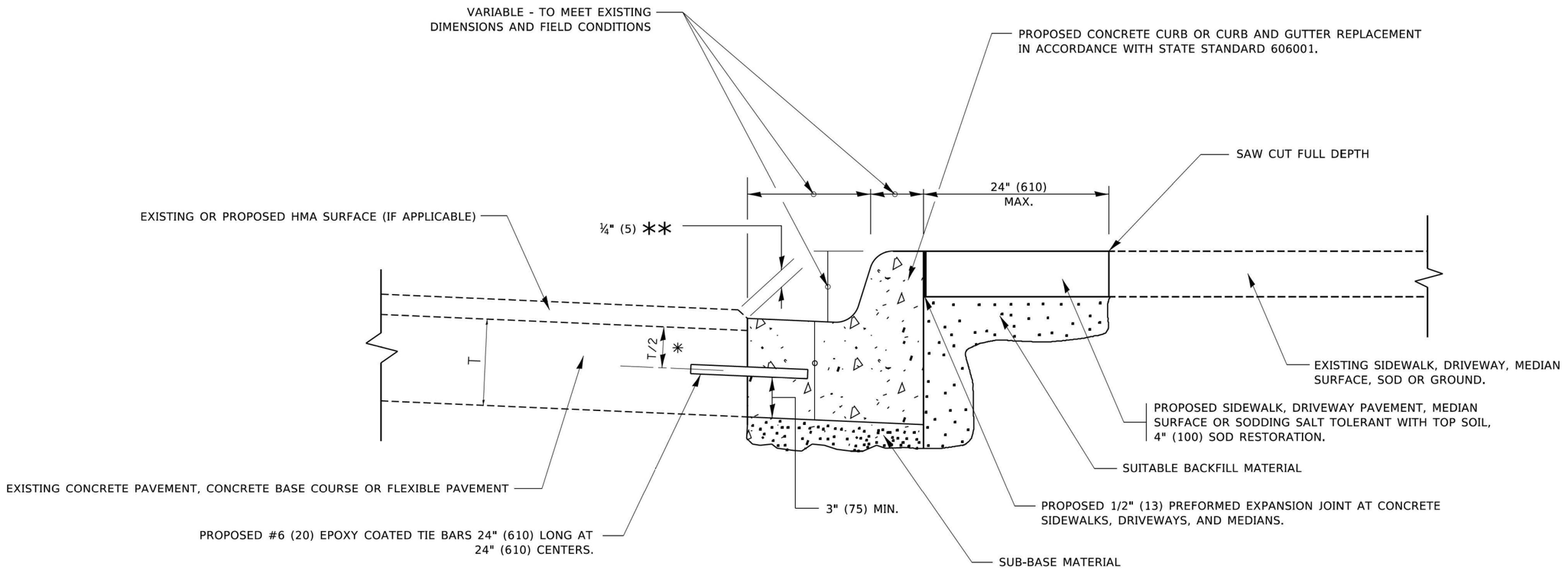

* 3" (75) MINIMUM FROM TOP AND BOTTOM OF THE CONCRETE PAVEMENT OR BASE COURSE.

** IF THE FINAL SURFACE OF THE PAVEMENT IS CONCRETE, THE GUTTER IS TO BE FLUSH WITH THE PAVEMENT.

CURB OR CURB AND GUTTER REMOVAL AND REPLACEMENT

ALL DIMENSIONS ARE IN INCHES (MILLIMETERS) UNLESS OTHERWISE SHOWN.

USER NAME = footem]	DESIGNED - A. HOUSEH	REVISED - A. ABBAS 03-21-97
	DRAWN -	REVISED - M. GOMEZ 01-22-01
PLOT SCALE = 50.0000 ' / in.	CHECKED -	REVISED - R. BORO 12-15-09
PLOT DATE = 7/11/2019	DATE - 03-11-94	REVISED - K. SMITH 07-11-19

STATE OF ILLINOIS
DEPARTMENT OF TRANSPORTATION

CURB OR CURB AND GUTTER REMOVAL AND REPLACEMENT

SCALE: NONE | SHEET 1 OF 1 SHEETS | STA. | TO STA.

F.A.I RTE.	SECTION	COUNTY	TOTAL SHEETS	SHEET NO.
80	FAI 80 23 Bridge Replacement 2	COOK	158	143
	BD600–06 (BD–24)	CONTRACT NO. 62W20		
	ILLINOIS FED. AID PROJECT			

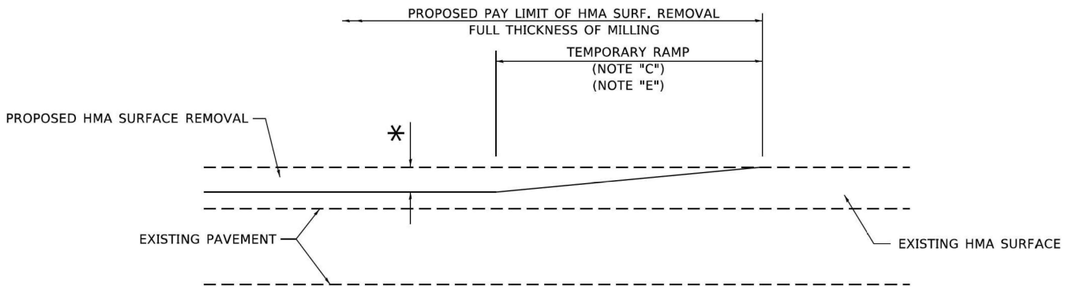

MILLED TEMPORARY RAMP

(FOR BUTT JOINT AND HMA TAPER SEE DETAIL BELOW)

OPTION 1

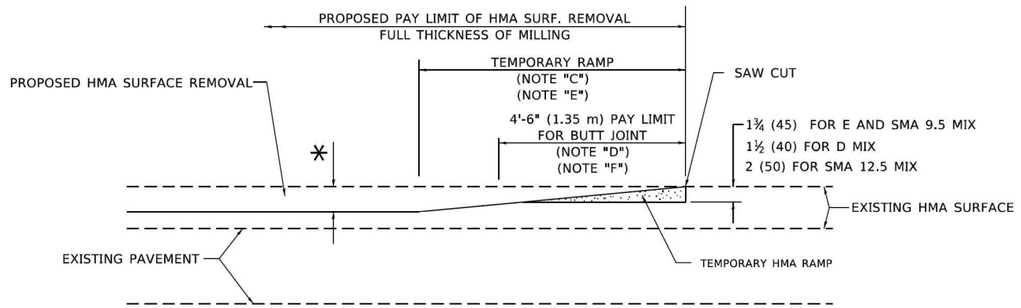

HMA CONSTRUCTED TEMPORARY RAMP

(FOR BUTT JOINT AND HMA TAPER SEE DETAIL BELOW)

OPTION 2

TYPICAL TEMPORARY RAMP

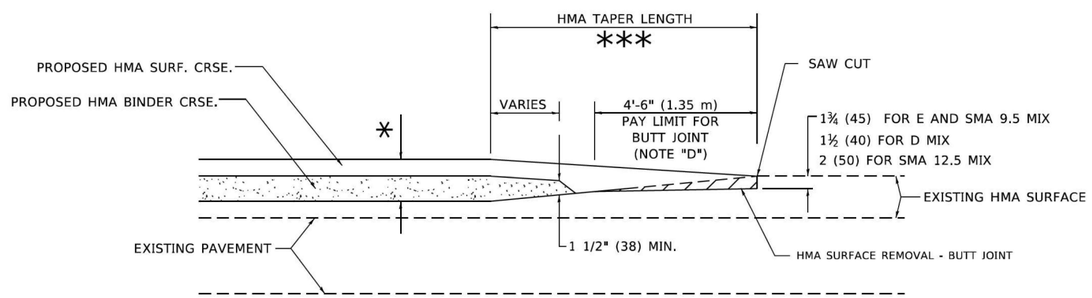

BUTT JOINT AND HMA TAPER

TYPICAL BUTT JOINT AND HMA TAPER FOR MILLING AND RESURFACING

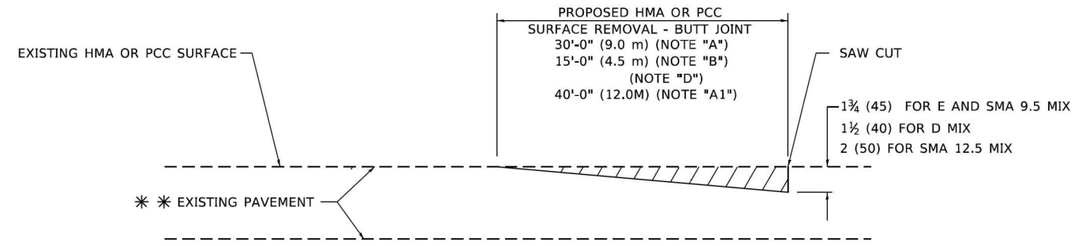

BUTT JOINT DETAIL

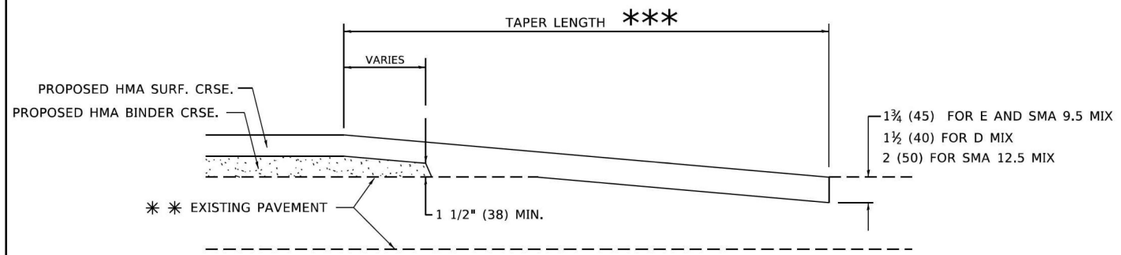

HMA TAPER DETAIL

TYPICAL BUTT JOINT AND HMA TAPER FOR RESURFACING ONLY

** PC CONCRETE, HMA OR HMA RESURFACED PAVEMENT.

GENERAL NOTES

A. MAINLINE ARTERIAL ROADWAYS AND MAJOR SIDE ROADS.

A1. INTERSTATES

B. MINOR SIDE ROADS.

C. THE TEMP. RAMP SHALL BE CONSTRUCTED IMMEDIATELY UPON REMOVAL OF THE EXISTING HMA SURFACE.

D. THE BUTT JOINT SHALL BE CONSTRUCTED IMMEDIATELY PRIOR TO PLACING THE PROPOSED HMA COURSES.

E. TAPER THE TEMP. RAMP AT A RATE OF 3' - 4" (1.02m) PER 1 INCH (25 mm) OF MILLING THICKNESS.

* SEE TYPICAL SECTIONS FOR MILLING THICKNESS.

F. SEE ARTICLE 406.08 AND 406.14 OF THE STANDARD SPECIFICATIONS FOR "HMA AND/OR PCC SURFACE REMOVAL, BUTT JOINT".

*** 20'-0" (6.1 m) PER 1 (25) RESURFACING (NOTE "A")
10'-0" (3.0 m) PER 1 (25) RESURFACING (NOTE "B")

BASIS OF PAYMENT

1. THE BUTT JOINT WILL BE PAID FOR AT THE CONTRACT UNIT PRICE PER SQUARE YARD (SQUARE METER) FOR "HOT-MIX ASPHALT SURFACE REMOVAL - BUTT JOINT" OR FOR "PORTLAND CEMENT CONCRETE SURFACE REMOVAL- BUTT JOINT".

2. THE TEMPORARY RAMP AND SAW CUT SHALL BE INCLUDED IN THE UNIT COST FOR HMA OR PCC SURFACE REMOVAL-BUTT JOINT.

ALL DIMENSIONS ARE IN INCHES (MILLIMETERS) UNLESS OTHERWISE SHOWN.

USER NAME = Lawrence.DeManche	DESIGNED - M. DE YONG	REVISED - A. ABBAS 03-21-97
	DRAWN -	REVISED - M. GOMEZ 04-06-01
PLOT SCALE = 100.0000 ' / In.	CHECKED -	REVISED - R. BORO 01-01-07
PLOT DATE = 11/18/2022	DATE - 06-13-90	REVISED - K. SMITH 11-18-22

STATE OF ILLINOIS
DEPARTMENT OF TRANSPORTATION

BUTT JOINT AND HMA TAPER DETAILS

SCALE: NONE | SHEET 1 OF 1 SHEETS | STA. | TO STA.

F.A.I RTE.	SECTION	COUNTY	TOTAL SHEETS	SHEET NO.
80	FAI 80 23 Bridge Replacement 2	COOK	158	144
	BD400–05 BD–32	CONTRACT NO. 62W20		
	ILLINOIS FED. AID PROJECT			

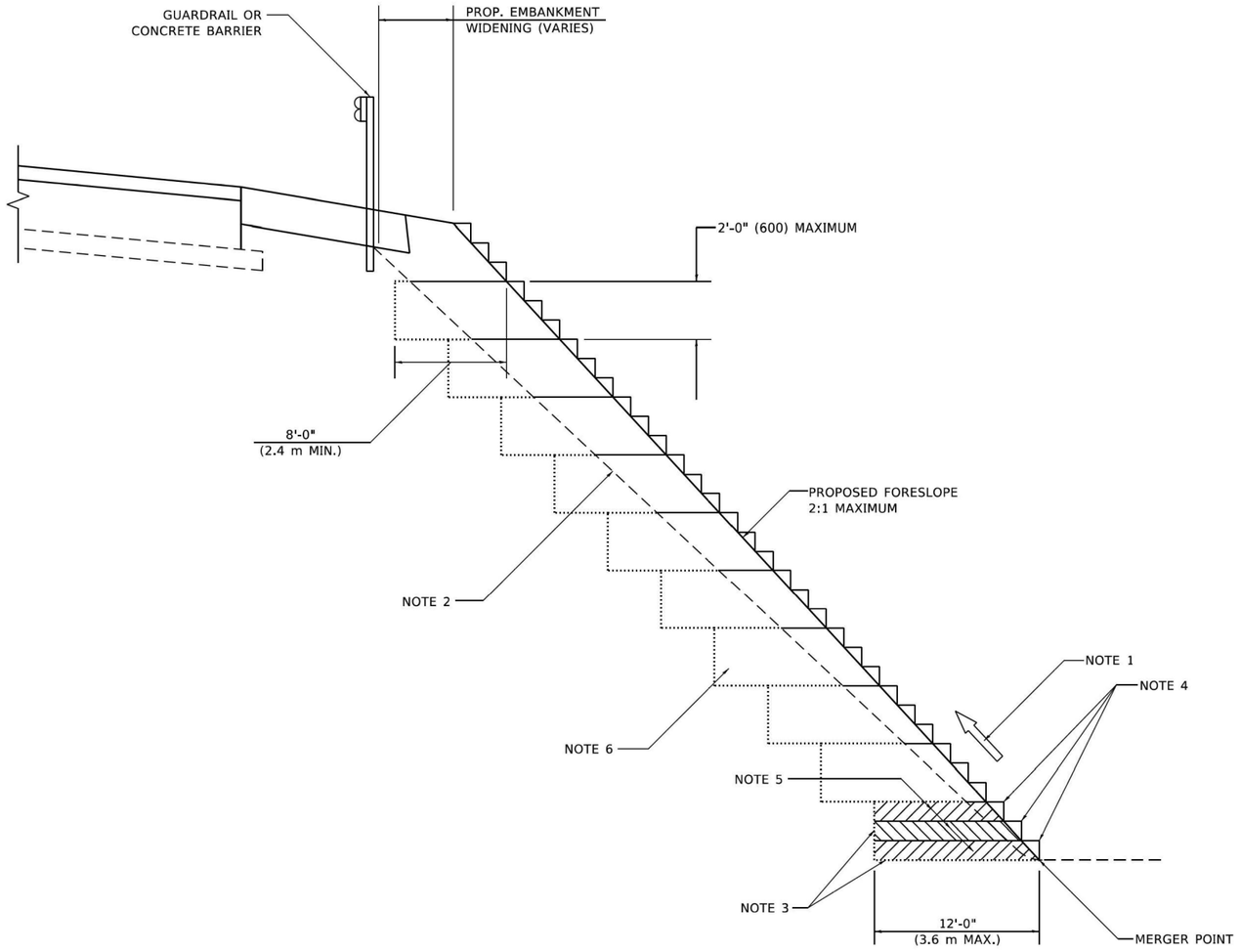

TYPICAL BENCHING DETAIL FOR EMBANKMENT

GENERAL NOTES

1. CONSTRUCT SUCCEEDING BENCH CUTS AND EMBANKMENT PLACEMENT AND COMPACTION FROM BOTTOM TO TOP IN STAIRSTEP FASHION.
2. EXISTING FORESLOPE PREPARED IN ACCORDANCE WITH ARTICLE 205.03 OF THE STANDARD SPECIFICATIONS.
3. BENCH CUT EXISTING SLOPE TYPICAL FOR EACH STEP.
4. TRIM TO FINAL SLOPE.
5. EQUAL 8-INCH (200) LIFTS OF EMBANKMENT COMPACTED IN ACCORDANCE WITH ARTICLE 205.05 OF THE STANDARD SPECIFICATIONS.

BASIS OF PAYMENT

1. EXCAVATION OF BENCH CUTS WITHIN EXISTING EMBANKMENT WILL BE PAID FOR AT THE CONTRACT UNIT PRICE PER CUBIC METER OR CUBIC YARD FOR "EARTH EXCAVATION". THIS PRICE WILL INCLUDE ALL LABOR AND MATERIAL, NO ADDITIONAL COMPENSATION WILL BE ALLOWED.

ALL DIMENSIONS ARE IN INCHES (MILLIMETERS) UNLESS OTHERWISE SHOWN.

USER NAME = Lawrence,DeManche	DESIGNED -	REVISED - K. SMITH 11-18-22
	DRAWN - CADD	REVISED -
PLOT SCALE = 100.0000 ' / in.	CHECKED - S.E.B.	REVISED -
PLOT DATE = 11/18/2022	DATE - 06-16-04	REVISED -

STATE OF ILLINOIS
DEPARTMENT OF TRANSPORTATION

BENCHING DETAIL
FOR EMBANKMENT WIDENING

SCALE: NONE | SHEET 1 OF 1 SHEETS | STA. | TO STA.

F.A. RTE.	SECTION	COUNTY	TOTAL SHEETS	SHEET NO.
I80	FAI 80 23 Bridge Replacement 2	COOK	158	145
	BD-51	CONTRACT NO. 62W20		
	ILLINOIS FED. AID PROJECT			

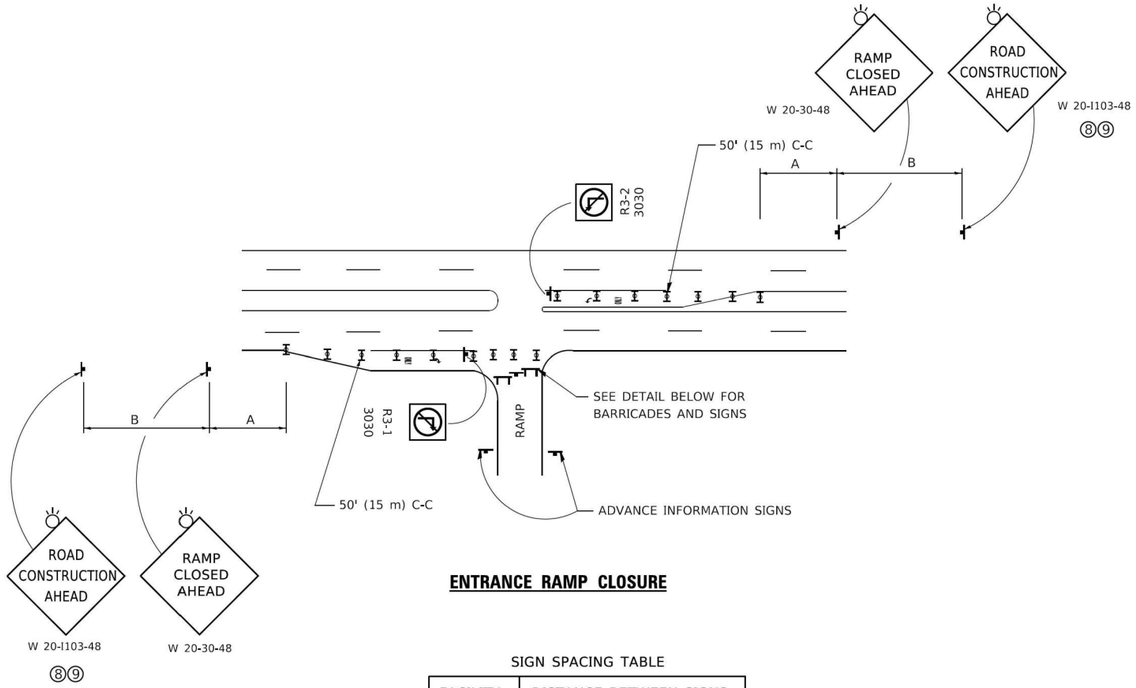

ENTRANCE RAMP CLOSURE

SIGN SPACING TABLE

FACILITY	DISTANCE BETWEEN SIGNS	
	A	B
EXPRESSWAY >24 HOURS	1000' (300 m)	1500' (450 m)
EXPRESSWAY ≤24 HOURS	500' (150 m)	500' (150 m)
ARTERIAL 55 MPH	500' (150 m)	500' (150 m)
ARTERIAL 50-45 MPH	350' (100 m)	350' (100 m)
ARTERIAL <45 MPH	200' (60 m)	200' (60 m)

DISTANCES MAY BE SHORTENED DEPENDING UPON THE PROXIMITY OF ADJACENT RAMPS OR INTERSECTIONS.

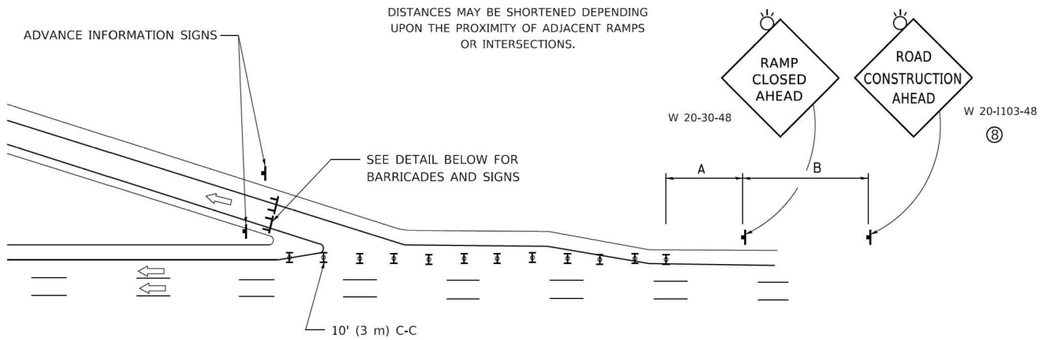

EXIT RAMP CLOSURE

SYMBOLS

TYPE II BARRICADE OR DRUM

TYPE III BARRICADE WITH 2 FLASHING LIGHTS

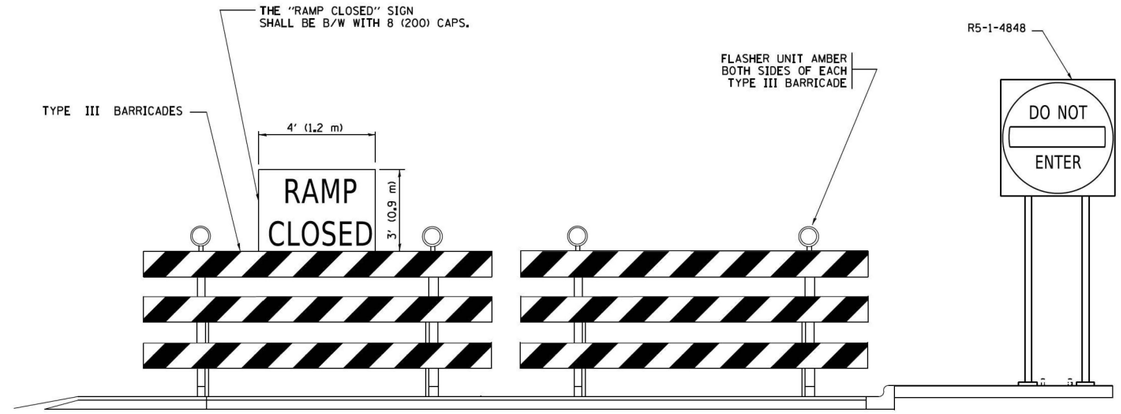

DETAIL FOR REQUIRED BARRICADES & SIGNS

RAMP CLOSURE ADVANCE WARNING SIGN

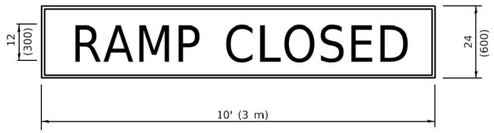

BLACK LEGEND ON ORANGE BACKGROUND MOUNTED DIAGONALLY
E MOD FONT
1 (25) BORDER
THESE SIGNS ARE REQUIRED ON ALL THE EXIT GUIDE SIGNS FOR EXIT RAMPS THAT WILL BE CLOSED FOR MORE THAN FOUR (4) CONSECUTIVE DAYS.

RAMP CLOSURE ADVANCE INFORMATION SIGN

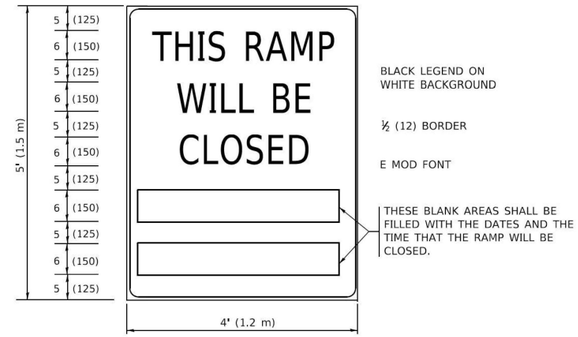

BLACK LEGEND ON WHITE BACKGROUND

½ (12) BORDER

E MOD FONT

THESE BLANK AREAS SHALL BE FILLED WITH THE DATES AND THE TIME THAT THE RAMP WILL BE CLOSED.

THESE SIGNS ARE REQUIRED ON BOTH SIDES OF THE RAMP, MINIMUM OF 1 WEEK IN ADVANCE OF THE CLOSURE.

THESE SIGNS SHALL BE FABRICATED AND PAID FOR ACCORDING TO THE TEMPORARY INFORMATION SIGNING SPECIAL PROVISION

GENERAL NOTES:

1. CONES MAY BE SUBSTITUTED FOR DRUMS OR TYPE II BARRICADES DURING DAY OPERATIONS. CONES SHALL BE A MINIMUM OF 28 (700) HIGH.
2. VERTICAL BARRICADES SHALL NOT BE USED FOR RAMP CLOSURES.
3. A FLAGGER SHALL BE POSITIONED AT EACH CLOSED RAMP THAT IS OPEN TO CONSTRUCTION VEHICLES, PRECEEDED BY A W20-7 FLAGGER WARNING SIGN.
4. ALL ROUTE MARKERS AND TRAILBLAZER ASSEMBLIES WHICH DIRECT MOTORISTS TO A CLOSED ENTRANCE RAMP SHALL BE COVERED WHEN THE RAMP IS CLOSED FOR MORE THAN FOUR (4) DAYS.
5. THE SIGNING AND BARRICADING WHICH IS REQUIRED BY THIS DETAIL SHALL BE INCLUDED IN THE COST OF TRAFFIC CONTROL AND PROTECTION (EXPRESSWAYS).
6. AUTHORIZATION FROM THE DISTRICT'S BUREAU OF TRAFFIC IS REQUIRED FOR ALL RAMP CLOSURES.
7. THE RAMP CLOSURE ADVANCE INFORMATION SIGNS SHALL BE ERECTED IF THE CLOSURE TIME EXCEEDS TWENTY-FOUR (24) HOURS. ADDITIONAL ADVANCE WARNING SIGNS ON EXIT GUIDE SIGNING WILL BE REQUIRED FOR EXIT RAMP CLOSURES THAT EXCEED FOUR (4) DAYS IN LENGTH
8. ROAD CONSTRUCTION AHEAD SIGNS MAY BE OMITTED WHEN THIS DETAIL IS USED IN CONJUNCTION WITH OTHER TRAFFIC CONTROL THAT ALREADY INCLUDES A ROAD CONSTRUCTION AHEAD SIGN.
9. ARTERIAL ROAD CONSTRUCTION AHEAD SIGNS SHALL BE INSTALLED ON THE LEFT SIDE OF TRAFFIC IF THE MEDIAN IS MORE THAN 10 FT WIDE.

ALL DIMENSIONS ARE IN INCHES (MILLIMETERS) UNLESS OTHERWISE SHOWN.

USER NAME = footemj	DESIGNED - D.W.S.	REVISED - S.P.B._01-07	
	DRAWN -	REVISED - S.P.B._12-09	
PLOT SCALE = 50.0000 ' / in.	CHECKED -	REVISED - M.D._06-13	
PLOT DATE = 3/4/2019	DATE - 02-83	REVISED - M.D._01-18	

STATE OF ILLINOIS
DEPARTMENT OF TRANSPORTATION

ENTRANCE AND EXIT RAMP CLOSURE DETAILS

SCALE: NONE | SHEET 1 OF 1 SHEETS | STA. | TO STA.

F.A.I RTE.	SECTION	COUNTY	TOTAL SHEETS	SHEET NO.
80	FAI 80 23 Bridge Replacement 2	COOK	158	146
	TC-08	CONTRACT NO. 62W20		
	ILLINOIS FED. AID PROJECT			

SINGLE LANE WEAVE

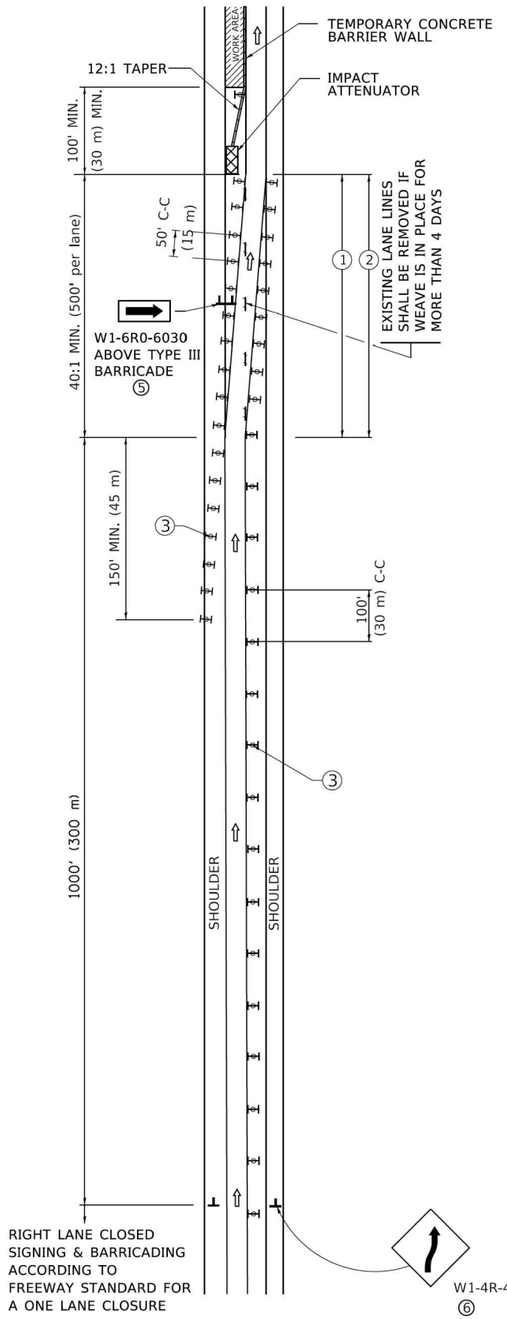

MULTI–LANE WEAVE

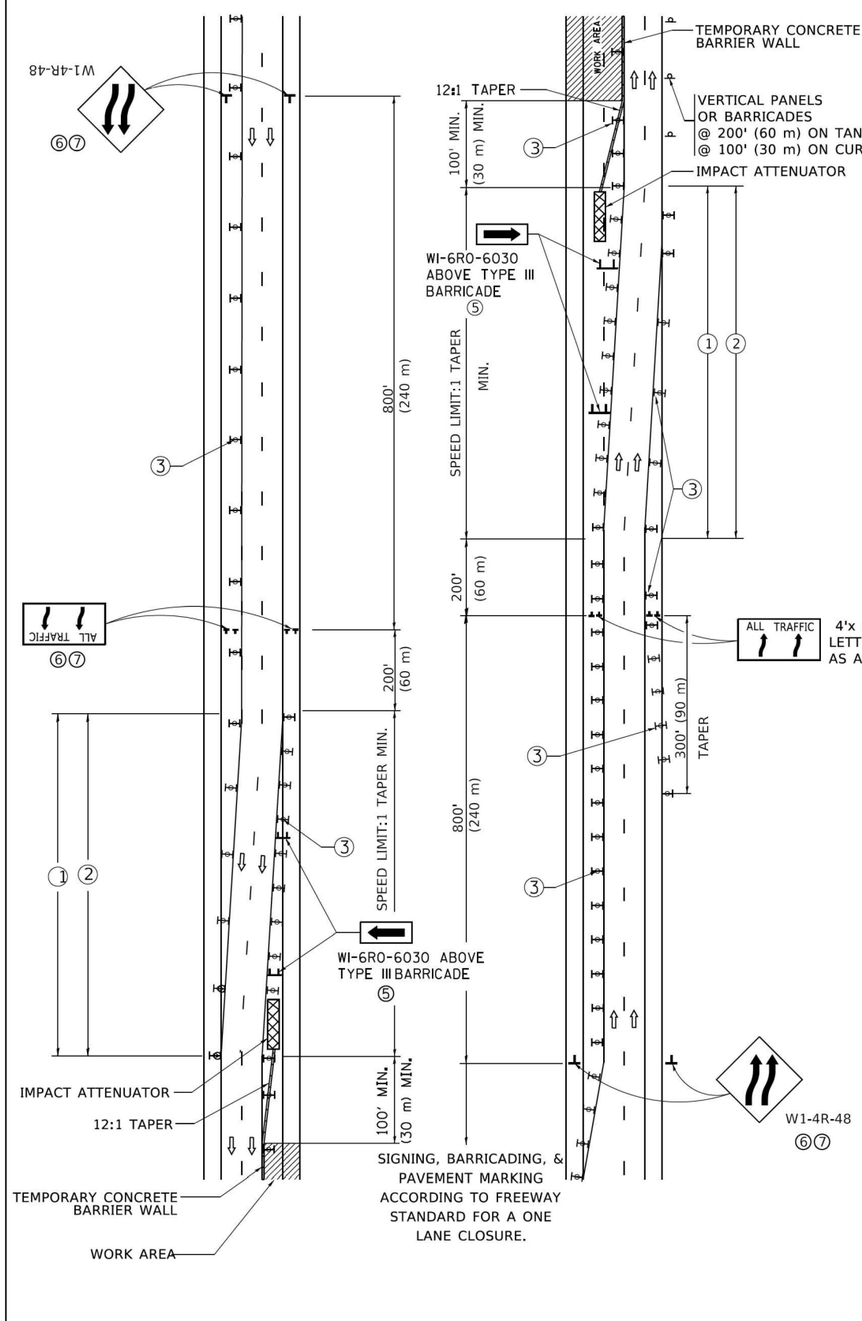

GENERAL NOTES:

① EXISTING CONFLICTING PAVEMENT MARKING LINES SHALL BE REMOVED. PAVEMENT MARKING REMOVAL SHALL NOT BE REQUIRED FOR SINGLE LANE WEAVES UNDER 4 DAYS IN DURATION.

② CONTINOUS REFLECTIVE TEMPORARY PAVEMENT MARKING TAPE SHALL BE PLACED THROUGHOUT THE TAPER AND FOR 300' (90 m) ALONG SIDE THE WORK AREA WHERE THE CLOSURE TIME IS GREATER THAN FOURTEEN DAYS. THE LEFT EDGE LINE SHALL BE YELLOW AND THE RIGHT EDGE LINE SHALL BE WHITE. FOR MULTI-LANE WEAVES LANE LINES SHALL BE 5 INCH, 10'-30' (3 m-9 m) SKIP DASH, WHITE.

③ PLASTIC DRUMS WITH STEADY BURN LIGHTS AT 50' (15 m) C-C SPACING IN TAPERS AND 100' (30 m) C-C SPACING IN TANGENTS.

④ ALL SIGNS SHALL BE POST MOUNTED IF THE CLOSURE TIME EXCEEDS FOUR DAYS.

⑤ TYPE III BARRICADES MAY BE OMMITTED FOR SINGLE-LANE WEAVES UNDER 24-HOURS IN DURATION. W1-6 SIGNS WILL STILL BE REQUIRED. IF THE WIDTH OF OFFSET IS LESS THAN 6' THEN THE TYPE III BARRICADE WITH ATTACHED ARROW SIGN PANEL CAN BE ELIMINATED IN THE TAPER AREAS.

⑥ WHEN THE LENGTH OF THE SHIFTED SEGMENT (DISTANCE BETWEEN WEAVE POINTS) IS LESS THAN 1500', DOUBLE REVERSE CURVE SIGNS (W24-1) SHOULD BE USED INSTEAD OF THE REVERSE CURVE (W1-4) SIGNS. ARROWS ON THE 4'X8' "ALL TRAFFIC" SIGNS SHALL BE THE SAME SHAPE.

⑦ THE NUMBER OF ARROWS ON THESE SIGNS SHALL MATCH THE NUMBER OF LANES OPEN TO TRAFFIC.

SYMBOLS

- DIRECTION OF TRAFFIC
- WORK AREA
- SIGN ON PORTABLE OR PERMANENT SUPPORT
- TYPE II BARRICADE OR DRUM WITH MONO-DIRECTIONAL STEADY BURNING LIGHT
- TEMPORARY CONCRETE BARRIER WALL
- IMPACT ATTENUATOR
- W24-1-48 ⑦

ALL DIMENSIONS ARE IN INCHES (MILLIMETERS) UNLESS OTHERWISE SHOWN

USER NAME = footem]	DESIGNED - D.W.S.	REVISED - J.A.F. 02-06
	DRAWN -	REVISED - S.P.B. 01-07
PLOT SCALE = 50.0000 ' / in.	CHECKED -	REVISED - S.P.B. 12-09
PLOT DATE = 3/4/2019	DATE - 02-87	REVISED - M.D. 06-13

STATE OF ILLINOIS
DEPARTMENT OF TRANSPORTATION

TRAFFIC CONTROL DETAILS FOR FREEWAY SINGLE & MULTI–LANE WEAVE

SCALE: NONE | SHEET 1 OF 1 SHEETS | STA. | TO STA.

F.A. RTE.	SECTION	COUNTY	TOTAL SHEETS	SHEET NO.
80	FAI 80 23 Bridge Replacement 2	COOK	158	147
	TC–09	CONTRACT NO. 62W20		
	ILLINOIS FED. AID PROJECT			

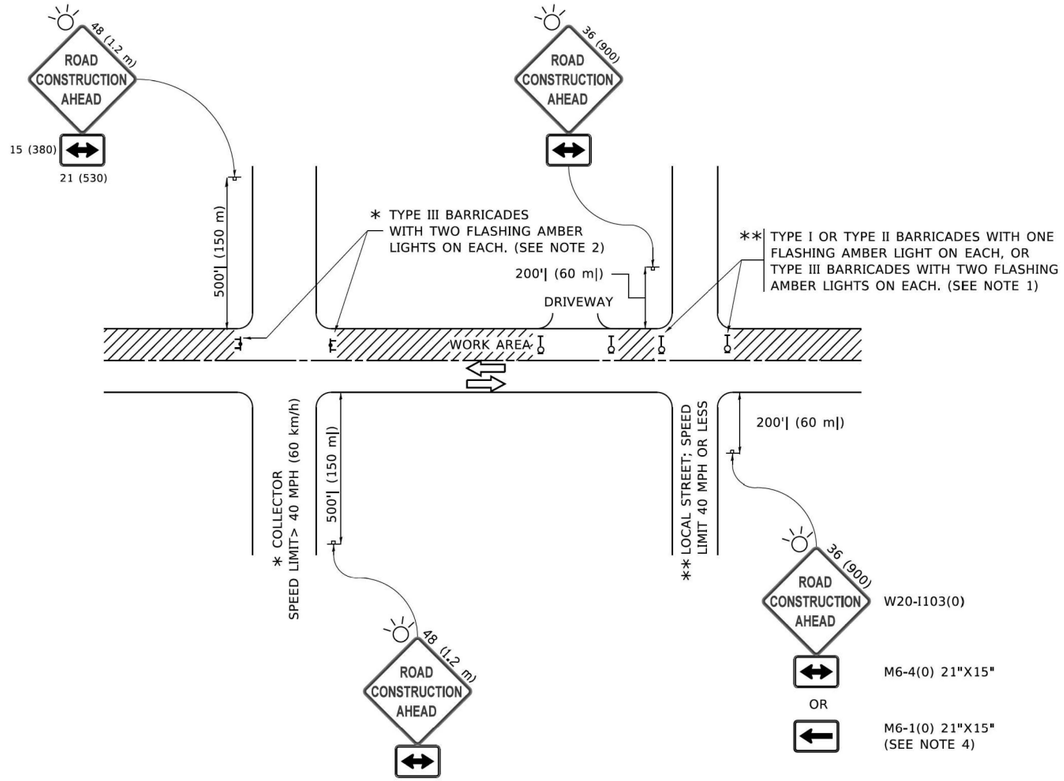

NOTES:

1. SIDE ROAD WITH A SPEED LIMIT OF 40 MPH (60 km/h) OR LESS AS SHOWN ON THE DRAWING AND AS DIRECTED BY THE ENGINEER:
   a) ONE "ROAD CONSTRUCTION AHEAD" SIGN 36 x 36 (900x900) WITH A FLASHER MOUNTED ON IT APPROXIMATELY 200' (60 m) IN ADVANCE OF THE MAIN ROUTE.
   b) THE CLOSED PORTION OF THE MAIN ROUTE SHALL BE PROTECTED BY BLOCKING WITH TYPE I, TYPE II OR TYPE III BARRICADES, 1/3 OF THE CROSS SECTION OF THE CLOSED PORTION.
2. SIDE ROAD WITH A SPEED LIMIT GREATER THAN 40 MPH (60 km/h) AS SHOWN ON THE DRAWING AND AS DIRECTED BY THE ENGINEER:
   a) ONE "ROAD CONSTRUCTION AHEAD" SIGN 48 x 48 (1.2 m x 1.2 m) WITH A FLASHER MOUNTED ON IT APPROXIMATELY 500' (150 m) IN ADVANCE OF THE MAIN ROUTE.
   b) THE CLOSED PORTION OF THE MAIN ROUTE SHALL BE PROTECTED BY BLOCKING WITH TYPE III BARRICADES, 1/2 OF THE CROSS SECTION OF THE CLOSED PORTION.
3. CONES MAY BE SUBSTITUTED FOR BARRICADES OR DRUMS AT HALF THE SPACING DURING DAY OPERATIONS. CONES SHALL BE A MINIMUM OF 28 (710) IN HEIGHT.
4. WHEN THE SIDE ROAD LIES BETWEEN THE BEGINNING OF THE MAINLINE SIGNING AND THE WORK ZONE, A SINGLE HEADED ARROW (M6-1) SHALL BE USED IN LIEU OF THE DOUBLE HEADED ARROW (M6-4).
5. WHEN WORK IS BEING PERFORMED ON A SIDE ROAD OR DRIVEWAY, FOLLOW THE APPLICABLE STANDARD(S). THE DIRECTIONAL ARROW (M6-1 OR M6-4) SHALL BE COVERED OR REMOVED WHEN NO LONGER CONSISTENT WITH THE TRAFFIC CONTROL SET-UP.
6. ADVANCE WARNING SIGNS ARE TO BE OMITTED ON DRIVEWAYS UNLESS OTHERWISE SPECIFIED IN THE PLANS OR BY THE ENGINEER.
7. THE TRAFFIC CONTROL AND PROTECTION FOR SIDE ROADS, INTERSECTIONS, AND DRIVEWAYS SHALL BE INCLUDED IN THE COST OF SPECIFIED TRAFFIC CONTROL STANDARDS OR ITEMS.

All dimensions are in inches (millimeters) unless otherwise shown.

USER NAME = footem]	DESIGNED - L.H.A.	REVISED - A. HOUSEH 10-15-96
	DRAWN -	REVISED - T. RAMMACHER 01-06-00
PLOT SCALE = 50.0000 ' / In.	CHECKED -	REVISED - A. SCHUETZE 07-01-13
PLOT DATE = 3/4/2019	DATE - 06-89	REVISED - A. SCHUETZE 09-15-16

STATE OF ILLINOIS
DEPARTMENT OF TRANSPORTATION

TRAFFIC CONTROL AND PROTECTION FOR SIDE ROADS, INTERSECTIONS, AND DRIVEWAYS

SCALE: NONE | SHEET 1 OF 1 SHEETS | STA. | TO STA.

F.A. RTE.	SECTION	COUNTY	TOTAL SHEETS	SHEET NO.
80	FAI 80 23 Bridge Replacement 2	COOK	158	148
	TC-10	CONTRACT NO. 62W20		
	ILLINOIS FED. AID PROJECT			

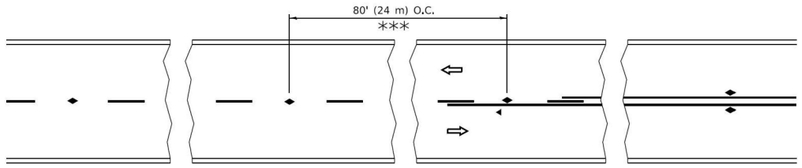

*** REDUCE TO 40' (12 m) O.C. ON CURVES WITH POSTED OR ADVISORY SPEED 45 M.P.H. (70 km/h) OR LESS.

TWO–LANE/TWO–WAY

SEE FIGURE 3B-14 MUTCD

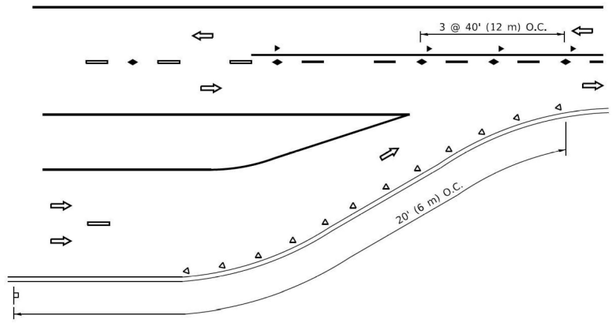

LANE REDUCTION TRANSITION

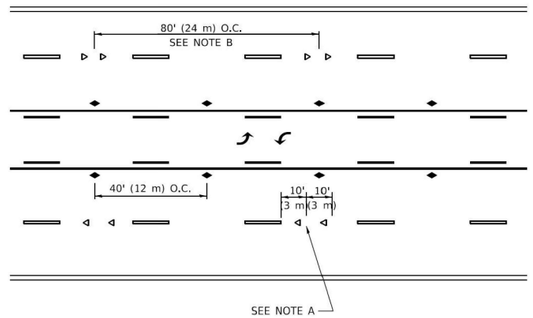

TWO–WAY LEFT TURN

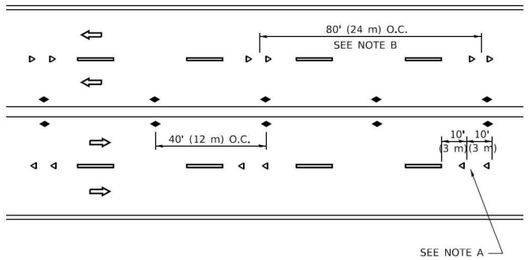

MULTI–LANE/UNDIVIDED

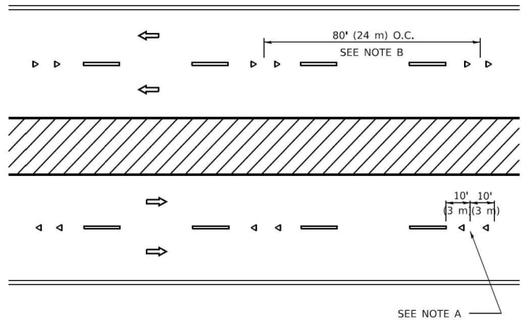

MULTI–LANE/DIVIDED

GENERAL NOTES

1. MARKERS USED WITH DASHED LINES SHALL BE CENTERED IN THE GAP BETWEEN SEGMENTS.
2. MARKERS USED ADJACENT TO SOLID LINES SHALL BE OFFSET 2 TO 3 (50 TO 75) TOWARD TRAFFIC AS SHOWN.
3. MARKERS THROUGH TANGENTS LESS THAN 500' (150 m) IN LENGTH BETWEEN CURVES SHALL BE INSTALLED AT THE LESSER OF THE TWO CURVE SPACINGS.
4. MARKERS ARE TO BE USED ADJACENT TO BOTH SOLID WHITE LINES IN DUAL LEFT TURN LANES

SYMBOLS

- YELLOW STRIPE
- WHITE STRIPE
- ONE-WAY AMBER MARKER
- ONE-WAY CRYSTAL MARKER (W/O)
- TWO-WAY AMBER MARKER

LANE MARKER NOTES

A. USE DOUBLE LANE LINE MARKERS SPACED AS SHOWN.

B. REDUCE TO 40' (12 m) O.C. ON CURVES WHERE ADVISORY SPEEDS ARE 10 M.P.H (20 km/h) LOWER THAN POSTED SPEEDS.

DESIGN NOTES

1. DOUBLE LANE LINE MARKERS SHALL BE USED UNLESS SPECIFIED OTHERWISE.
2. EXCEPT AS SHOWN ON THE LANE REDUCTION TRANSITION AND FREEWAY EXIT RAMP DETAIL, MARKERS ARE NOT TO BE SPECIFIED ON RIGHT EDGE LINES.
3. THE EXACT MARKER LIMITS, SPACING, AND COLOR SHALL BE INCLUDED IN THE PLANS WHEN STANDARD SPECIFICATIONS ARE NOT BEING USED.
4. MARKERS SHOULD NOT BE USED ALONGSIDE CURBS EXCEPT FOR EXTREMELY SHORT SECTIONS OF CURBS WHERE NOT MORE THAN TWO MARKERS WOULD BE INVOLVED.

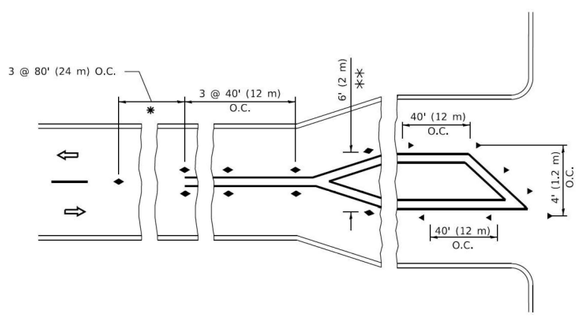

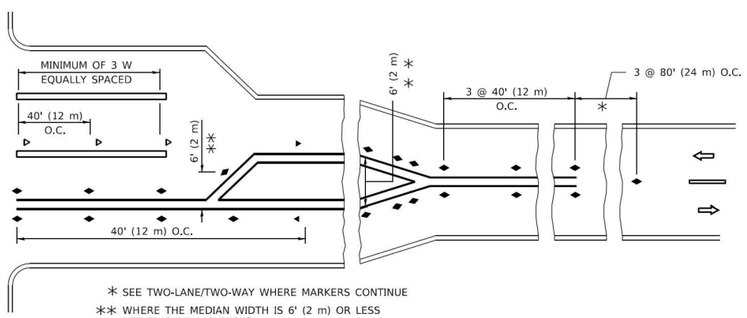

* SEE TWO-LANE/TWO-WAY WHERE MARKERS CONTINUE

** WHERE THE MEDIAN WIDTH IS 6' (2 m) OR LESS USE TWO-WAY MARKERS.

TURN LANES

All dimensions are in inches (millimeters) unless otherwise shown.

USER NAME = footem]	DESIGNED -	REVISED - T. RAMMACHER 03-12-99	
	DRAWN -	REVISED - T. RAMMACHER 01-06-00	
PLOT SCALE = 50.0000 ' / in.	CHECKED -	REVISED - C. JUCIUS 09-09-09	
PLOT DATE = 3/4/2019	DATE -	REVISED - C. JUCIUS 07-01-13	

STATE OF ILLINOIS
DEPARTMENT OF TRANSPORTATION

TYPICAL APPLICATIONS
RAISED REFLECTIVE PAVEMENT MARKERS (SNOW–PLOW RESISTANT)

SCALE: NONE | SHEET 1 OF 1 SHEETS | STA. | TO STA.

F.A. RTE.	SECTION	COUNTY	TOTAL SHEETS	SHEET NO.
80	FAI 80 23 Bridge Replacement 2	COOK	158	149
	TC–11	CONTRACT NO. 62W20		
	ILLINOIS FED. AID PROJECT			

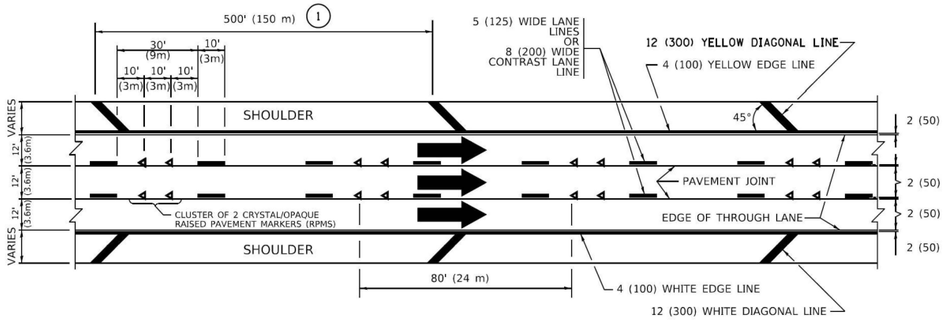

TYPICAL EDGE LINES & LANE LINES

PAVEMENT MARKING MATERIALS

1. THERMOPLASTIC PAVEMENT MARKING LINE SHALL BE USED FOR ALL EDGE LINES, GORE LINES, AND DIAGONAL LINES ON HMA PAVEMENTS.
2. POLYUREA OR MODIFIED URETHANE PAVEMENT MARKING LINE SHALL BE USED FOR ALL EDGE LINES, GORE LINES, AND DIAGONAL LINES ON PCC PAVEMENTS.
3. PREFORMED PLASTIC PAVEMENT MARKING LINE TYPE D, INLAID OR GROOVE IN, SHALL BE USED FOR ALL LANE LINES ON HMA PAVEMENTS.
4. CONTRAST PREFORMED PLASTIC PAVEMENT MARKING LINE TYPE B, GROOVE IN, SHALL BE USED FOR ALL LANE LINES ON PCC PAVEMENT.

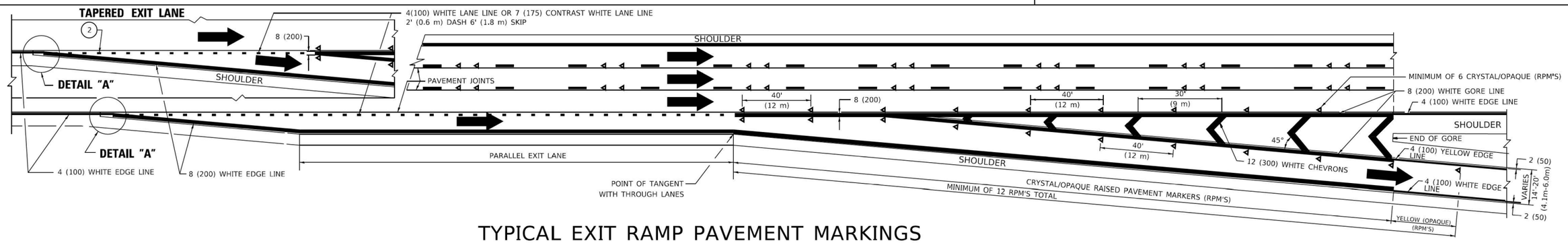

TYPICAL EXIT RAMP PAVEMENT MARKINGS

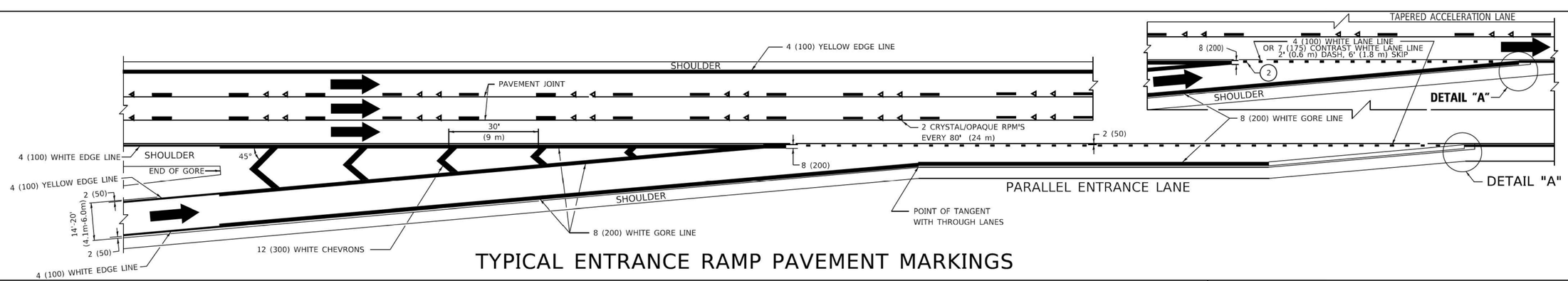

TYPICAL ENTRANCE RAMP PAVEMENT MARKINGS

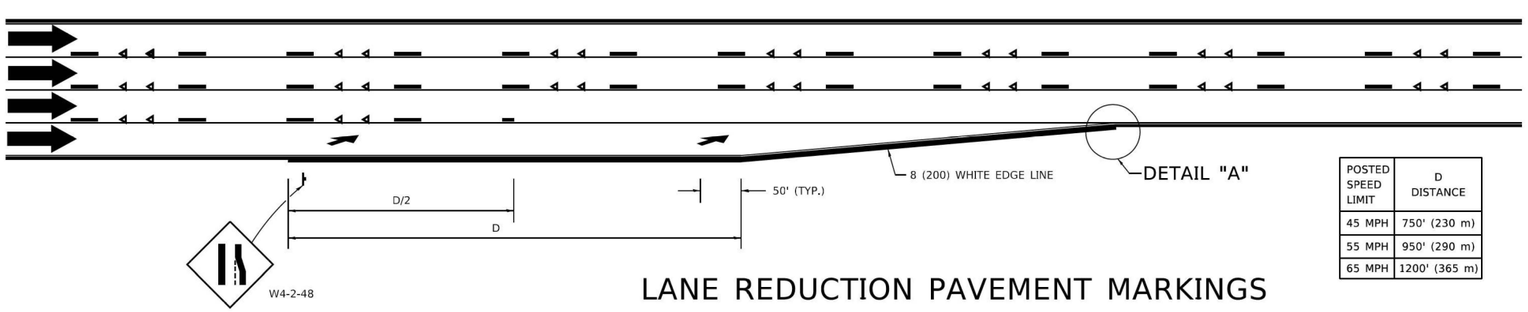

POSTED SPEED LIMIT	D DISTANCE
45 MPH	750' (230 m)
55 MPH	950' (290 m)
65 MPH	1200' (365 m)

LANE REDUCTION PAVEMENT MARKINGS

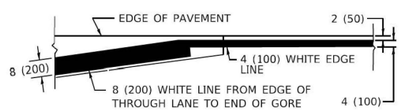

DETAIL "A"

NOTES:

1. THE DIAGONAL LINES SHALL BE SPACED AT 40' (12 m) C-C ACROSS ALL STRUCTURES WHICH ARE 500' (150 m) OR LESS IN LENGTH. THE DIAGONAL LINES ARE NOT REQUIRED ON SHOULDERS WHICH ARE 6' (1.8 m) OR LESS IN WIDTH.
2. 4" (2' DASH, 6' SKIP) MARKING ON TAPERED ENTRANCE AND EXIT RAMP SHALL BE OMITTED ON TANGENT SECTIONS.

USER NAME = Lawrence,DeManche	DESIGNED - D.W.S.	REVISED - S.P.B. 01-10	
	DRAWN -	REVISED - M.D. 05-13	
PLOT SCALE = 100.0000 ' / in.	CHECKED -	REVISED - M.D. 09-17	
PLOT DATE = 11/18/2022	DATE - 01-90	REVISED - K. SMITH 11-18-22	

STATE OF ILLINOIS
DEPARTMENT OF TRANSPORTATION

MULTI-LANE FREEWAY
PAVEMENT MARKING DETAILS

SCALE: NONE | SHEET 1 OF 2 SHEETS | STA. | TO STA.

F.A.I RTE.	SECTION	COUNTY	TOTAL SHEETS	SHEET NO.
80	FAI 80 23 Bridge Replacement 2	COOK	158	150
	TC-12	CONTRACT NO. 62W20		
	ILLINOIS FED. AID PROJECT			

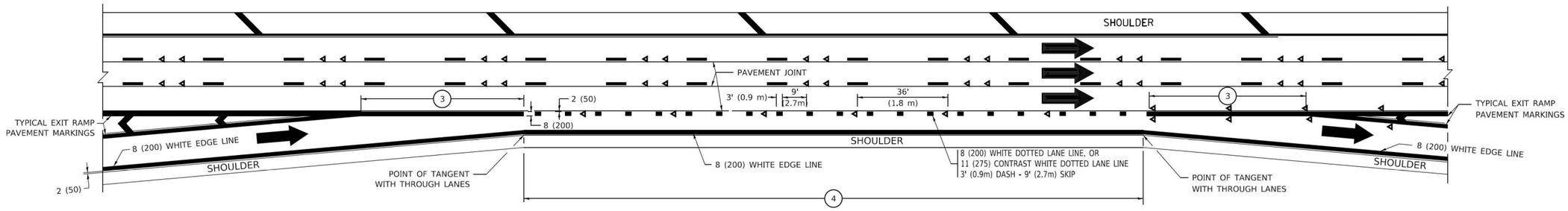

AUXILIARY LANE MARKINGS

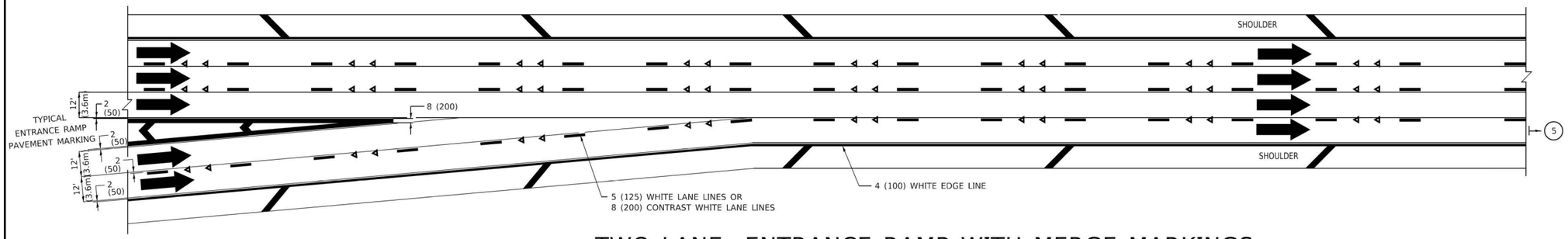

TWO LANE ENTRANCE RAMP WITH MERGE MARKINGS

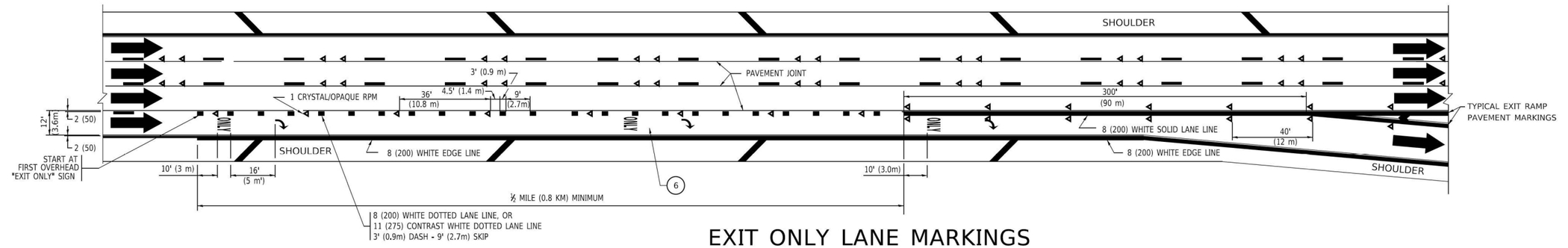

EXIT ONLY LANE MARKINGS

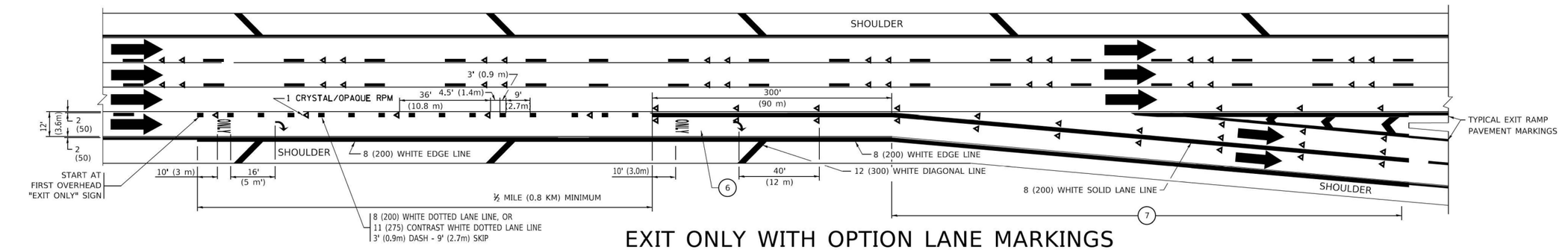

EXIT ONLY WITH OPTION LANE MARKINGS

NOTES:

3. OMIT WHEN LENGTH OF AUXILIARY LANE IS LESS THAN 500' (150 m).
4. 8-INCH WIDE DOTTED LANE LINE MARKINGS SHALL BE USED WHEN THE LENGTH OF THE AUXILIARY LANE IS 2 MILES OR LESS.
5. FOR TWO-LANE ENTRANCE RAMP, IF RIGHT LANE ENDS, USE TYPICAL ENTRANCE RAMP PAVEMENT MARKINGS.
6. ONLY AND ARROWS EQUALLY SPACED, 500' (150 m) MAXIMUM SPACING. FULL SIZE LETTERS AND ARROW SHALL BE USED..
7. CONTINUE 8" SOLID LANE LINE THROUGH EXIT TO END OF PAVED GORE.

USER NAME = footemj	DESIGNED - D.W.S.	REVISED - J.A.F. 02-06	
	DRAWN -	REVISED - S.P.B. 01-07	
PLOT SCALE = 50.0000 ' / in.	CHECKED -	REVISED - S.P.B. 01-10	
PLOT DATE = 3/4/2019	DATE - 01-90	REVISED - M.D. 09-17	

STATE OF ILLINOIS
DEPARTMENT OF TRANSPORTATION

MULTI–LANE FREEWAY
PAVEMENT MARKING DETAILS

SCALE: NONE | SHEET 2 OF 2 SHEETS | STA. | TO STA.

F.A. RTE.	SECTION	COUNTY	TOTAL SHEETS	SHEET NO.
80	FAI 80 23 Bridge Replacement 2	COOK	158	151
	TC–12	CONTRACT NO. 62W20		
	ILLINOIS FED. AID PROJECT			

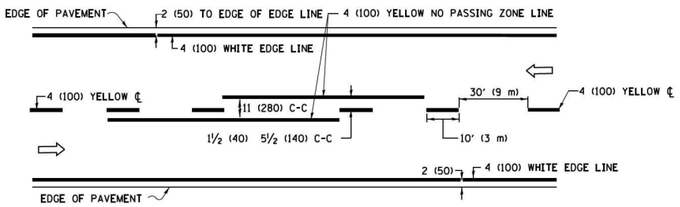

2–LANE ROADWAY

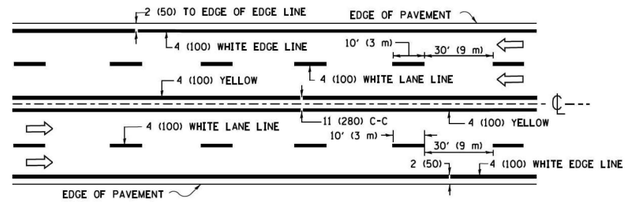

MULTI–LANE UNDIVIDED

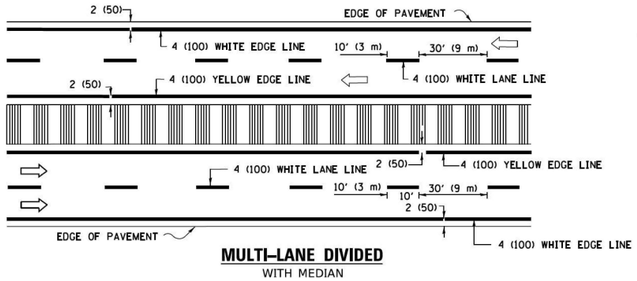

MULTI–LANE DIVIDED
WITH MEDIAN

TYPICAL LANE AND EDGE LINE MARKING

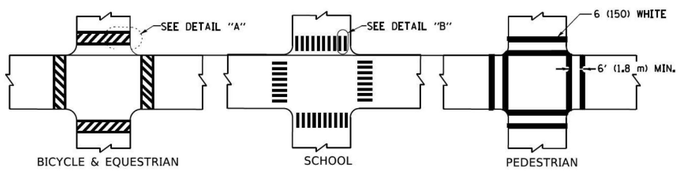

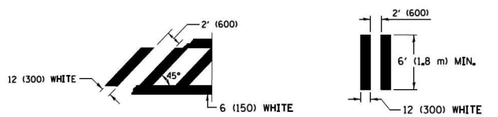

DETAIL "A" **DETAIL "B"**

TYPICAL CROSSWALK MARKING

✳ MARKINGS SHALL BE INSTALLED PARALLEL TO THE CENTERLINE OF THE ROAD WHICH IT CROSSES

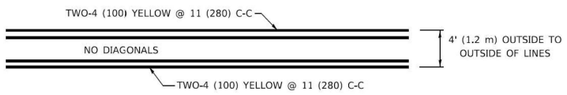

4' (1.2 m) WIDE MEDIANS ONLY

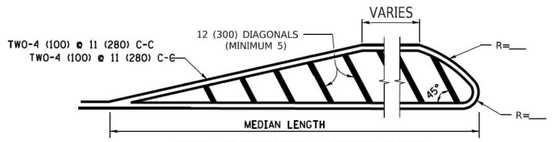

FOR MEDIAN LENGTHS WHERE DIAGONAL SPACING CANNOT BE ATTAINED, USE 5 (FIVE) EQUALLY SPACED DIAGONAL LINES.

DIAGONAL LINE SPACING: 50' (15 m) C-C (LESS THAN 30MPH (50 km/h))
75' (25 m) C-C 30MPH (50 km/h) TO 45MPH (70 km/h))
150' (45 m) C-C (MORE THAN 45MPH (70 km/h))

MEDIANS OVER 4' (1.2 m) WIDE

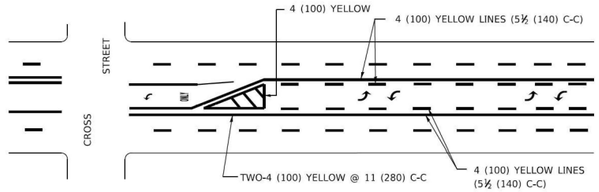

A MINIMUM OF TWO PAIRS OF TURN ARROWS SHALL BE USED, WHITE IN COLOR. ADDITIONAL PAIRS SHALL BE PLACED AT 200' (60 m) TO 300' (90 m) INTERVALS.

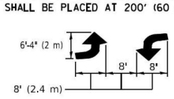

MEDIAN WITH TWO–WAY LEFT TURN LANE

TYPICAL PAINTED MEDIAN MARKING

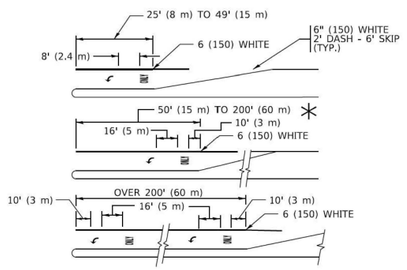

FULL SIZE LETTERS 8' (2.4 m) AND ARROWS SHALL BE USED.
AREA = 15.6 SQ. FT. (1.5 m²) **ONLY** AREA = 20.8 SQ. FT. (1.9 m²)

✳ TURN LANES IN EXCESS OF 400' (120 m) IN LENGTH MAY HAVE AN ADDITIONAL SET OF ARROW - "ONLY" INSTALLED MIDWAY BETWEEN THE OTHER TWO SETS OF ARROW - "ONLY".

TYPICAL LEFT (OR RIGHT) TURN LANE

TYPICAL TURN LANE MARKING

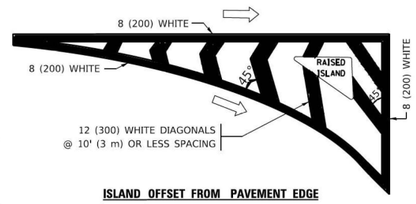

ISLAND OFFSET FROM PAVEMENT EDGE

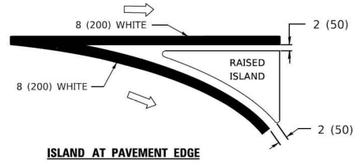

ISLAND AT PAVEMENT EDGE

TYPICAL ISLAND MARKING

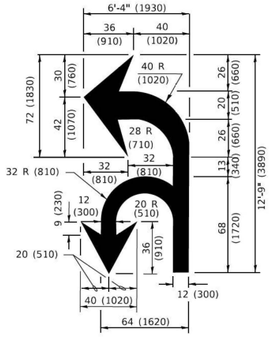

COMBINATION LEFT AND U–TURN

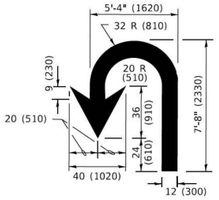

U–TURN

D(FT)	SPEED LIMIT
345	30
425	35
500	40
580	45
665	50
750	55

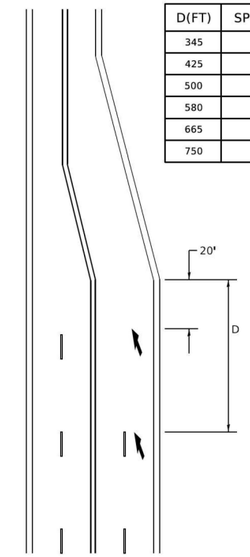

LANE REDUCTION TRANSITION

✳ LANE REDUCTION ARROWS REQUIRED AT SPEEDS OF 45 MPH OR GREATER OR WHEN SPECIFIED IN PLANS.

TYPE OF MARKING	WIDTH OF LINE	PATTERN	COLOR	SPACING / REMARKS
CENTERLINE ON 2 LANE PAVEMENT	4 (100)	SKIP-DASH	YELLOW	10' (3 m) LINE WITH 30' (9 m) SPACE
CENTERLINE ON MULTI-LANE UNDIVIDED PAVEMENT	2 @ 4 (100)	SOLID	YELLOW	11 (280) C-C
NO PASSING ZONE LINES: FOR ONE DIRECTION FOR BOTH DIRECTIONS	4 (100) 2 @ 4 (100)	SOLID SOLID	YELLOW YELLOW	5½ (140) C-C FROM SKIP-DASH CENTERLINE 11 (280) C-C OMIT SKIP-DASH CENTERLINE BETWEEN
LANE LINES	4 (100) 5 (125) ON FREEWAYS	SKIP-DASH SKIP-DASH	WHITE WHITE	10' (3 m) LINE WITH 30' (9 m) SPACE
DOTTED LINES (EXTENSIONS OF CENTER, LANE OR TURN LANE MARKINGS)	SAME AS LINE BEING EXTENDED	SKIP-DASH	SAME AS LINE BEING EXTENDED	2' (600) LINE WITH 6' (1.8 m) SPACE
EDGE LINES	4 (100)	SOLID	YELLOW-LEFT WHITE-RIGHT	OUTLINE MEDIANS IN YELLOW
TURN LANE MARKINGS	6 (150) LINE; FULL SIZE LETTERS & SYMBOLS (8' (2,4m))	SOLID	WHITE	SEE TYPICAL TURN LANE MARKING DETAIL
TWO WAY LEFT TURN MARKING	2 @ 4 (100) EACH DIRECTION 8' (2,4m) LEFT ARROW	SKIP-DASH AND SOLID IN PAIRS	YELLOW WHITE	10' (3 m) LINE WITH 30' (9 m) SPACE FOR SKIP-DASH; 5½ (140) C-C BETWEEN SOLID LINE AND SKIP-DASH LINE SEE TYPICAL TWO-WAY LEFT TURN MARKING DETAIL
CROSSWALK LINES (PEDESTRIAN) A. DIAGONALS (BIKE & EQUESTRIAN) B. LONGITUDINAL BARS (SCHOOL)	2 @ 6 (150) 12 (300) @ 45° 12 (300) @ 90°	SOLID SOLID SOLID	WHITE WHITE WHITE	NOT LESS THAN 6' (1.8 m) APART 2' (600) APART 2' (600) APART SEE TYPICAL CROSSWALK MARKING DETAILS.
STOP LINES	24 (600)	SOLID	WHITE	PLACE 4' (1.2 m) IN ADVANCE OF AND PARALLEL TO CROSSWALK, IF PRESENT. OTHERWISE, PLACE AT DESIRED STOPPING POINT. PARALLEL TO CROSSROAD CENTERLINE, WHERE POSSIBLE
PAINTED MEDIANS	2 @ 4 (100) WITH 12 (300) DIAGONALS @ 45° NO DIAGONALS USED FOR 4' (1.2 m) WIDE MEDIANS	SOLID	YELLOW: TWO WAY TRAFFIC WHITE: ONE WAY TRAFFIC	11 (280) C-C FOR THE DOUBLE LINE SEE TYPICAL PAINTED MEDIAN MARKING.
GORE MARKING AND CHANNELIZING LINES	8 (200) WITH 12 (300) DIAGONALS @ 45°	SOLID	WHITE	DIAGONALS: 15' (4.5 m) C-C (LESS THAN 30MPH (50 km/h)) 20' (6 m) C-C 30MPH (50 km/h) TO 45MPH (70 km/h)) 30' (9 m) C-C (OVER 45MPH (70 km/h))
RAILROAD CROSSING	24 (600) TRANSVERSE LINES; "RR" IS 6' (1.8 m) LETTERS; 16 (400) LINE FOR "X"	SOLID	WHITE	SEE STATE STANDARD 780001 AREA OF: "R"=3.6 SQ. FT. (0.33 m² EACH "X"=54.0 SQ. FT. (5.0 m²
SHOULDER DIAGONALS (REQUIRED FOR SHOULDERS ≥ 8')	12 (300) @ 45°	SOLID	WHITE - RIGHT YELLOW - LEFT	50' (15 m) C-C (LESS THAN 30MPH (50 km/h)) 75' (25 m) C-C (30 MPH (50 km/h) TO 45MPH (70 km/h)) 150' (45 m) C-C (OVER 45MPH (70 km/h))
U TURN ARROW	SEE DETAIL	SOLID	WHITE	16.3 SF
2 ARROW COMBINATION LEFT AND U TURN	SEE DETAIL	SOLID	WHITE	30.4 SF

FOR FURTHER DETAILS ON PAVEMENT MARKING REFER TO STANDARD SPECIFICATIONS FOR ROAD AND BRIDGE CONSTRUCTION AND STATE STANDARD 780001.

All dimensions are in inches (millimeters) unless otherwise shown.

USER NAME = footem]	DESIGNED - EVERS	REVISED - C. JUCIUS 09-09-09
	DRAWN -	REVISED - C. JUCIUS 07-01-13
PLOT SCALE = 50.0000 ' / In.	CHECKED -	REVISED - C. JUCIUS 12-21-15
PLOT DATE = 3/4/2019	DATE - 03-19-90	REVISED - C. JUCIUS 04-12-16

STATE OF ILLINOIS
DEPARTMENT OF TRANSPORTATION

DISTRICT ONE
TYPICAL PAVEMENT MARKINGS

SCALE: NONE | SHEET 1 OF 1 SHEETS | STA. | TO STA.

F.A. RTE.	SECTION	COUNTY	TOTAL SHEETS	SHEET NO.
80	FAI 80 23 Bridge Replacement 2	COOK	158	152
	TC–13	CONTRACT NO. 62W20		
		ILLINOIS	FED. AID PROJECT	

TURN BAY ENTRANCE AT START OF LANE CLOSURE TAPER

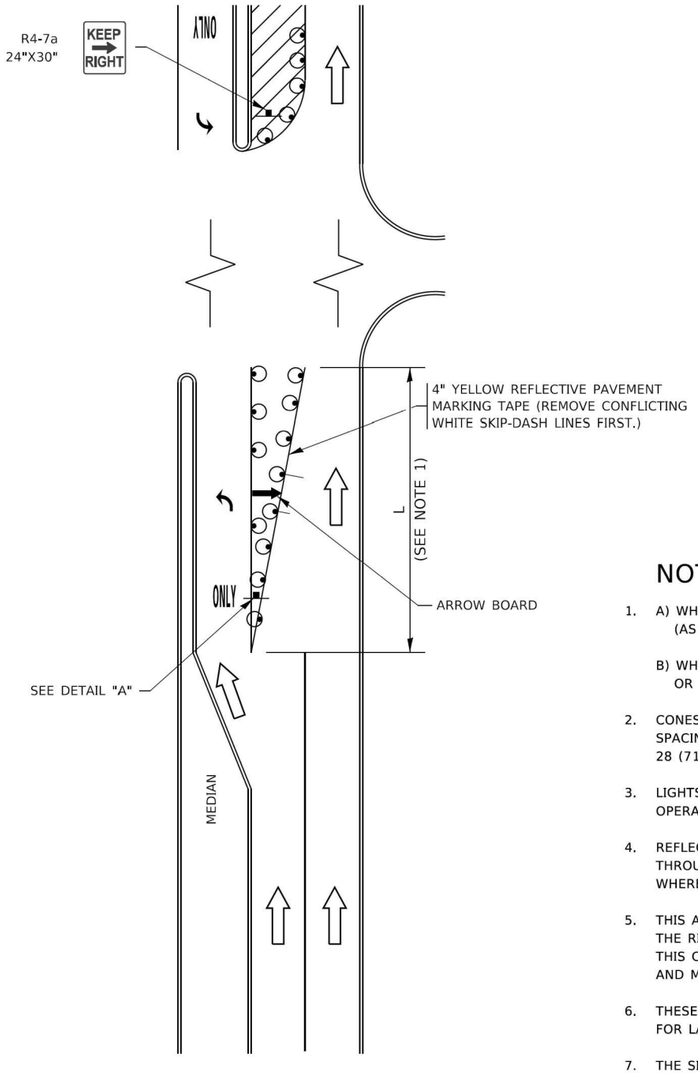

FIGURE 1

LEGEND

- WORK AREA
- LANE OPEN TO TRAFFIC
- ARROW BOARD
- TYPE I OR II BARRICADE OR DRUM WITH STEADY BURN LIGHT
- DRUM WITH STEADY BURN LIGHT
- SIGN ASSEMBLY
- TYPE I OR II CHECK BARRICADE WITH FLASHING LIGHT

NOTES:

1. A) WHEN "L" IS ≤ THE STORAGE LENGTH OF THE TURN LANE (AS SHOWN IN FIG. 1), USE FIGURE 1.

   B) WHEN "L" IS > THE STORAGE LENGTH OF THE TURN LANE OR THE TURN LANE IS WITHIN THE LANE CLOSURE, USE FIGURE 2.
2. CONES MAY BE SUBSTITUTED FOR BARRICADES OR DRUMS AT HALF THE SPACING DURING DAY OPERATIONS. CONES SHALL BE A MINIMUM OF 28 (710) IN HEIGHT.
3. LIGHTS WILL NOT BE REQUIRED ON BARRICADES OR DRUMS FOR DAY OPERATIONS. ALL LIGHTS SHALL BE MONODIRECTIONAL.
4. REFLECTIVE TEMPORARY PAVEMENT MARKINGS SHALL BE PLACED THROUGHOUT THE BARRICADED AREAS OF EACH TURN BAY AS SHOWN WHERE THE CLOSURE TIME IS GREATER THAN FOURTEEN (14) DAYS.
5. THIS APPLICATION ALSO APPLIES WHEN WORK IS BEING PERFORMED IN THE RIGHT LANE(S) AND THE RIGHT TURN BAY IS TO REMAIN OPEN. UNDER THIS CONDITION, "RIGHT TURN LANE" R3-I100R 24 x 24 (600 x 600) AND M6-2R 21 x 15 (530 x 380) SHALL BE USED.
6. THESE CONTROLS SHALL SUPPLEMENT MAINLINE TRAFFIC CONTROL FOR LANE CLOSURES.
7. THE SIGNS SHALL BE MOUNTED ABOVE THE BARRICADES/DRUMS ON SEPARATE SIGN SUPPORTS THAT MEET NCHRP 350 OR MASH PREQUIREMENTS.
8. TRAFFIC CONTROL AND PROTECTION AT TURN BAYS (TO REMAIN OPEN TO TRAFFIC) SHALL BE INCLUDED IN THE COST OF SPECIFIED TRAFFIC CONTROL STANDARDS OR ITEMS.

TURN BAY ENTRANCE WITHIN A LANE CLOSURE

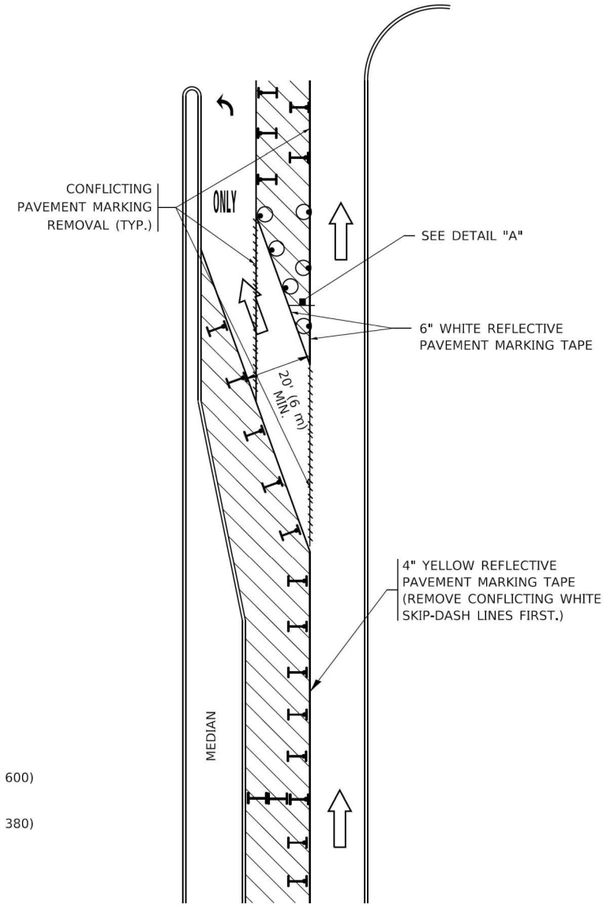

FIGURE 2

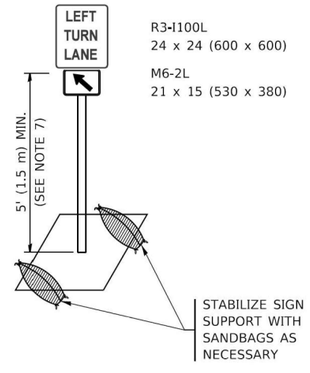

DETAIL A

All dimensions are in inches (millimeters) unless otherwise shown.

USER NAME = footemj	DESIGNED - T. RAMMACHER 09-08-94	REVISED - R. BORO 09-14-09	
	DRAWN - A. HOUSEH 11-07-95	REVISED - A. SCHUETZE 07-01-13	
PLOT SCALE = 50.0000 ' / in.	CHECKED - A. HOUSEH 10-12-96	REVISED - A. SCHUETZE 09-15-16	
PLOT DATE = 3/4/2019	DATE - T. RAMMACHER 01-06-00	REVISED -	

STATE OF ILLINOIS
DEPARTMENT OF TRANSPORTATION

TRAFFIC CONTROL AND PROTECTION AT TURN BAYS (TO REMAIN OPEN TO TRAFFIC)

SCALE: NONE | SHEET 1 OF 1 SHEETS | STA. | TO STA.

F.A.I RTE.	SECTION	COUNTY	TOTAL SHEETS	SHEET NO.
80	FAI 80 23 Bridge Replacement 2	COOK	158	153
	TC-14	CONTRACT NO. 62W20		
	ILLINOIS FED. AID PROJECT			

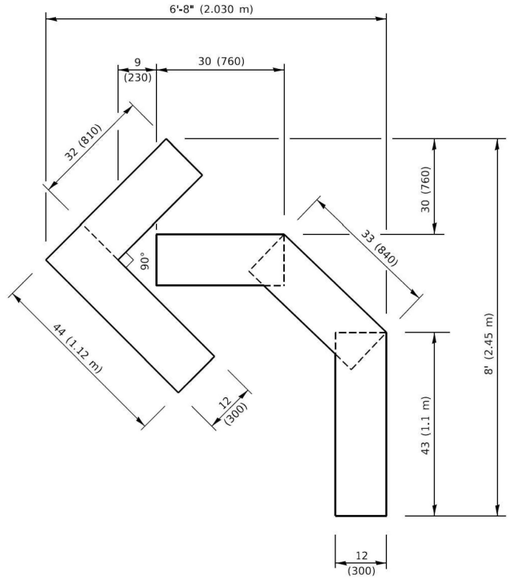

QUANTITY

4 (100) LINE = 45.5 ft. (13.9 m)
15.2 sq. ft. (1.41 sq. m)

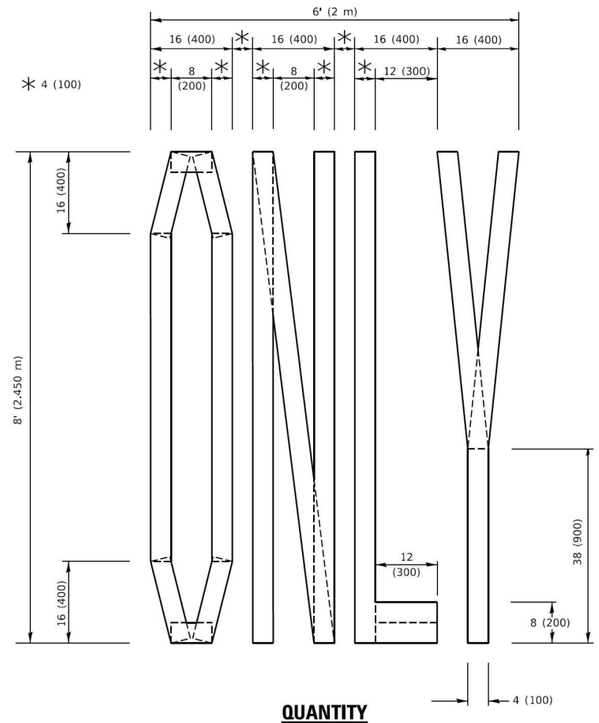

QUANTITY

4 (100) LINE = 64.1 ft. (19.5 m)
21.4 sq. ft. (1.99 sq. m)

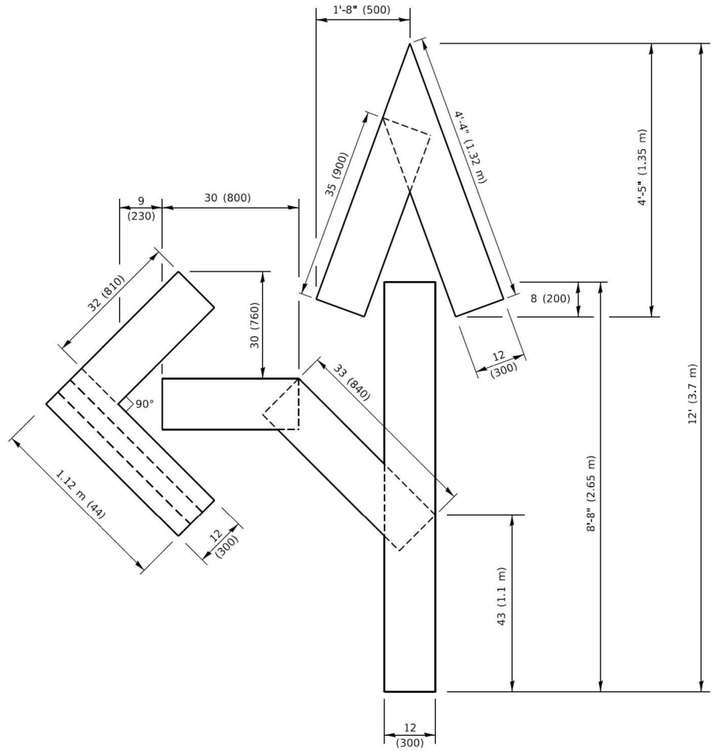

QUANTITY

4 (100) LINE = 82.5 ft. (25.1 m)
27.5 sq. ft. (2.53 sq. m)

NOTE:

ALL QUANTITIES OF PLACEMENT ARE REPRESENTED IN LINEAR FEET OF 4" LINES TO MATCH THE 4" TEMPORARY TAPE PAY ITEM AND REPRESENTS THE TOTAL QUANTITY OF 4" TAPE REQUIRED.

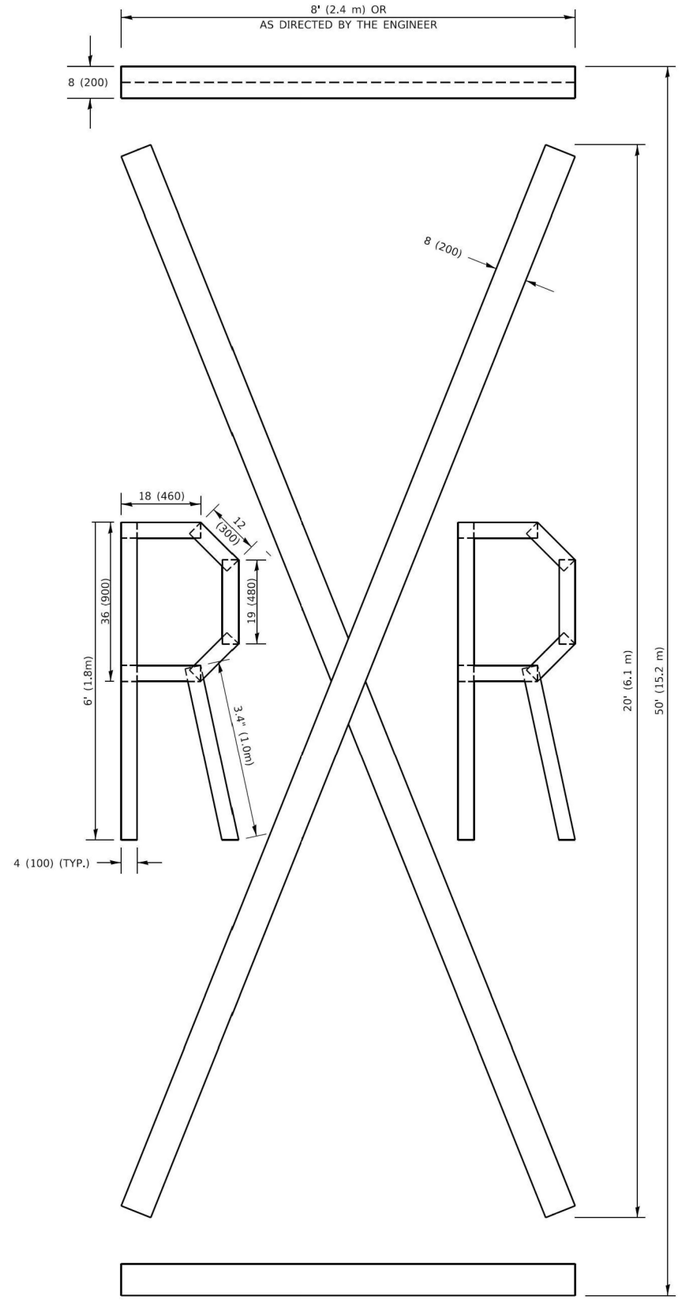

QUANTITY

4 (100) LINE = 225.9 ft. (68.9 m)
75.3 sq. ft. (6.99 sq. m)

All dimensions are in inches (millimeters) unless otherwise shown.

USER NAME = footemj	DESIGNED -	REVISED - T. RAMMACHER 03-02-98
	DRAWN -	REVISED - E. GOMEZ 08-28-00
PLOT SCALE = 50.0068 ' / in.	CHECKED -	REVISED - E. GOMEZ 08-28-00
PLOT DATE = 3/4/2019	DATE - 09-18-94	REVISED - A. SCHUETZE 09-15-16

STATE OF ILLINOIS
DEPARTMENT OF TRANSPORTATION

SHORT TERM PAVEMENT MARKING LETTERS AND SYMBOLS

SCALE: NONE | SHEET 1 OF 1 SHEETS | STA. | TO STA.

F.A. RTE.	SECTION	COUNTY	TOTAL SHEETS	SHEET NO.
80	FAI 80 23 Bridge Replacement 2	COOK	158	154
	TC-16	CONTRACT NO. 62W20		
	ILLINOIS FED. AID PROJECT			

PARTIAL RAMP CLOSURE DETAILS

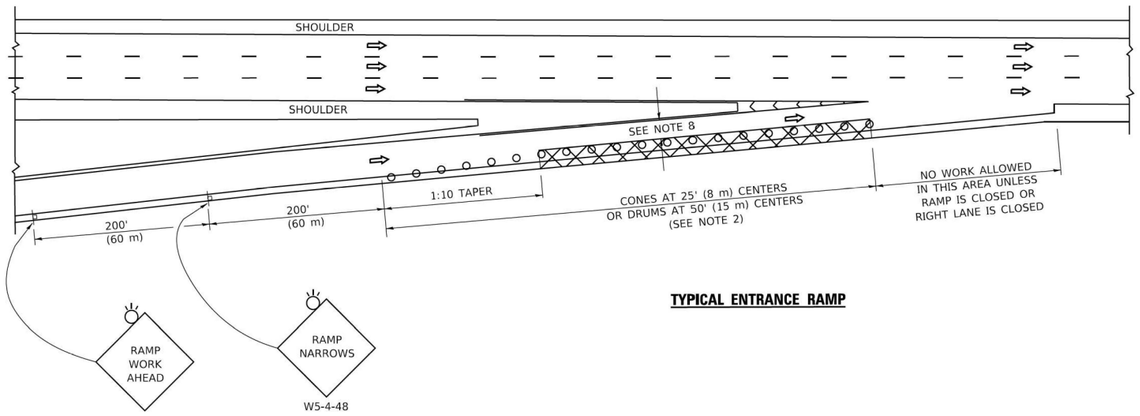

TYPICAL ENTRANCE RAMP

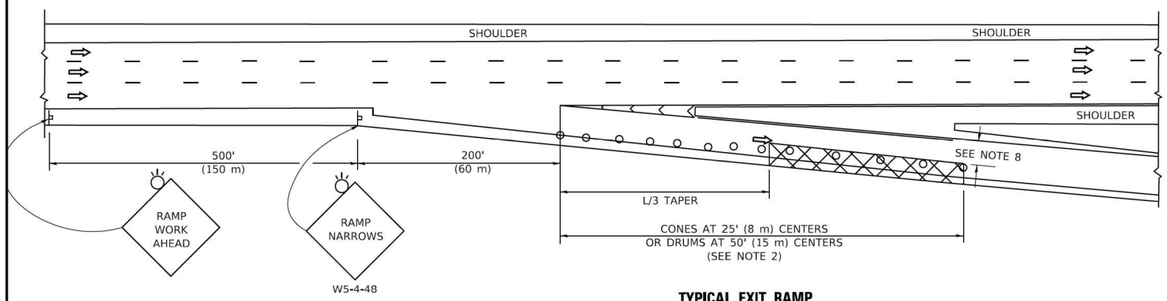

TYPICAL EXIT RAMP

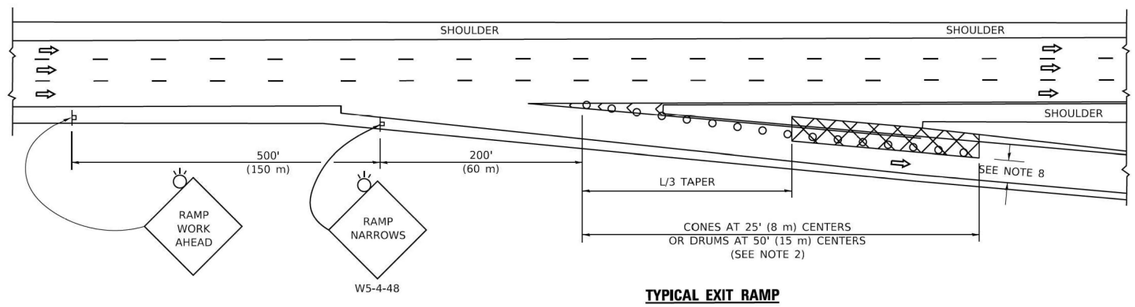

TYPICAL EXIT RAMP

SHOULDER CLOSURE DETAILS

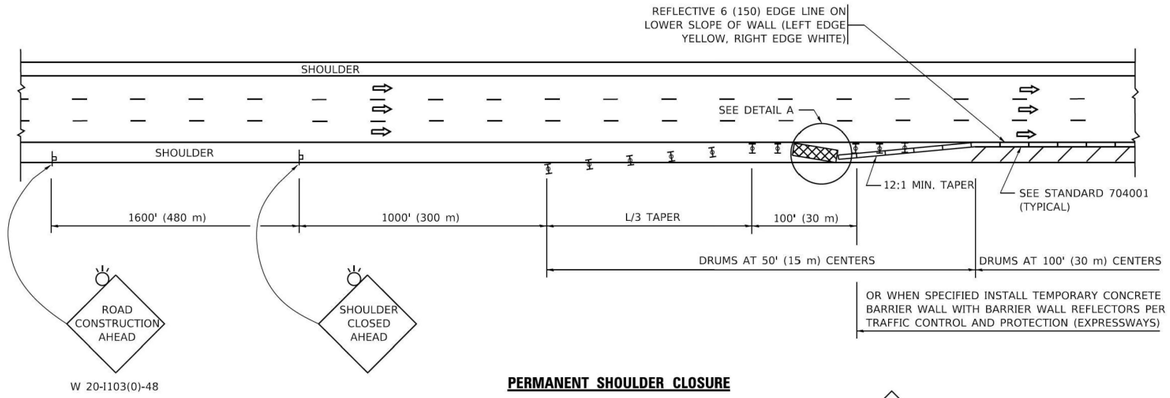

PERMANENT SHOULDER CLOSURE

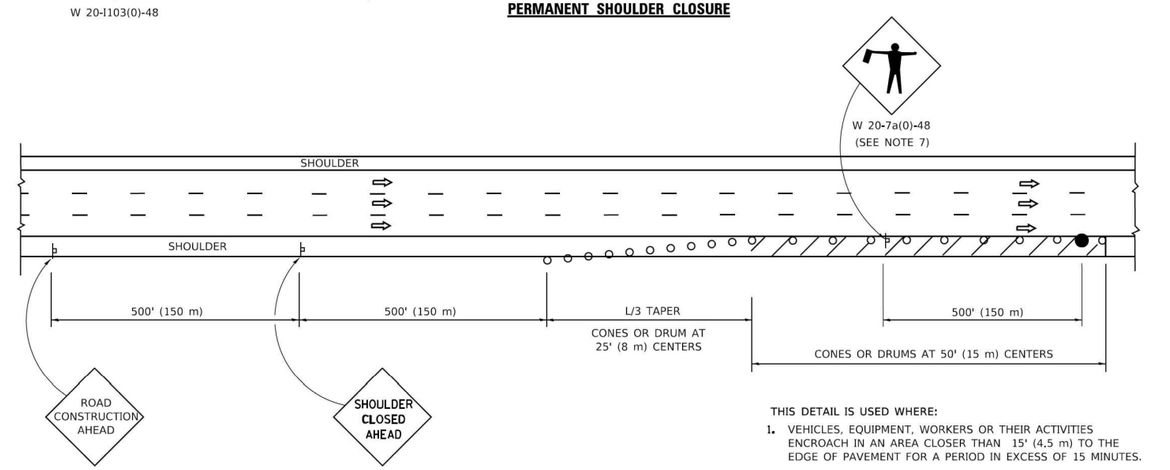

DAYTIME SHOULDER CLOSURE

THIS DETAIL IS USED WHERE:

1. VEHICLES, EQUIPMENT, WORKERS OR THEIR ACTIVITIES ENCROACH IN AN AREA CLOSER THAN 15' (4.5 m) TO THE EDGE OF PAVEMENT FOR A PERIOD IN EXCESS OF 15 MINUTES.

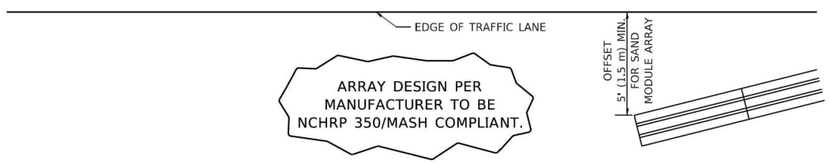

DETAIL "A"
IMPACT ATTENTUATOR, TEMPORARY
(SEE NOTE 5)

SYMBOLS

- ACTIVE WORK AREA
- SIGN ON PORTABLE OR PERMANENT SUPPORT
- FLAGGER WITH CONTROL SIGN
- TYPE II BARRICADE OR DRUM
- CONE, DRUM OR BARRICADE
- IMPACT ATTENUATOR OF TYPE AND TEST LEVEL SPECIFIED

GENERAL NOTES:

1. THE "L" DISTANCE EQUALS:

SPEED LIMIT	FORMULAS	
45 mph (80 km/h) OR GREATER:	METRIC	ENGLISH
	L=0.65(W)(S)	L=(W)(S)

W = WIDTH OF OFFSET IN FEET (METERS)
S = NORMAL POSTED SPEED MPH (KM/H)

2. TYPE II BARRICADES OR DRUMS ARE REQUIRED FOR ALL NIGHTIME CLOSURES. TYPE II BARRICADES OR DRUMS WITH MONODIRECTIONAL STEADY BURN LIGHTS ARE REQUIRED FOR DELINEATING OBSTICLES, EXCAVATIONS, OR HAZARDS EXCEEDING 100 FT (30m) IN LENGTH AT NIGHT.
3. ALL SIGNS SHALL BE POST MOUNTED IF THE CLOSURE TIME EXCEEDS FOUR DAYS.
4. FLASHING LIGHTS SHALL BE USED DURING THE HOURS OF DARKNESS AND SHALL BE INSTALLED ABOVE THE FIRST TWO SETS OF SIGNS.
5. THE IMPACT ATTENTUATOR, TEMPORARY IS NOT REQUIRED WHEN THE TEMPORARY CONCRETE BARRIER WALL IS PROTECTED BY OR IS TIED INTO THE EXISTING GUARDRAIL. IF OFFSET IS LESS THAN 5 FEET USE NARROW USE TYPE DEVICE TO MEET NCHRP350/MASH.
6. AUTHORIZATION FROM THE DISTRICT'S BUREAU OF TRAFFIC IS REQUIRED FOR ALL FREEWAY CLOSURES.
7. THE FLAGGER AND FLAGGER SIGN ARE REQUIRED AT THE ABOVE WORK SITES WHEN:
   a. FOUR OR MORE WORK VEHICLES ENTER THE TRAFFIC LANES IN A ONE HOUR PERIOD.
   b. THE WORK AVTIVITY REQUIRES FREQUENT ENCROACHMENT INTO THE LANE OPEN TO TRAFFIC.

   THE FLAGGER SHALL BE STATIONED APPROXIMATELY 100' (30 m) TO 200' (60 m) IN ADVANCE OF THE WORKERS.
8. 12' MIN. WIDTH TANGENT SECTION
   16' MIN. WIDTH CURVE SECTION.

ALL DIMENSIONS ARE IN INCHES (MILLIMETERS) UNLESS OTHERWISE SHOWN.

USER NAME = footem]	DESIGNED -	REVISED -	S.P.B. 01-07
	DRAWN - D.W.S.	REVISED -	S.P.B. 12-09
PLOT SCALE = 50.0000 ' / In.	CHECKED -	REVISED -	M.D. 06-13
PLOT DATE = 3/4/2019	DATE - 11-96	REVISED -	M.D. 01-18

STATE OF ILLINOIS
DEPARTMENT OF TRANSPORTATION

TRAFFIC CONTROL DETAILS FOR FREEWAY
SHOULDER CLOSURES AND PARTIAL RAMP CLOSURES

SCALE: NONE | SHEET 1 OF 1 SHEETS | STA. | TO STA.

F.A.I RTE.	SECTION	COUNTY	TOTAL SHEETS	SHEET NO.
80	FAI 80 23 Bridge Replacement 2	COOK	158	155
	TC-17	CONTRACT NO. 62W20		
	ILLINOIS FED. AID PROJECT			

ROUTE MARKERS

30 — FOR U.S. ROUTES M1-40-2424

ILL 53 — FOR ILLINOIS ROUTES M1-50-2424

MAIN STREET — R.R. UNMARKED ROUTES SPECIAL 24" x 18" VARIABLE 4" BLACK LETTERS ON WHITE REFLECTIVE BACKGROUND

ARROWS SIGNS

- M5-1L-2115
- M5-1R-2115
- M6-1-2115
- M6-1-2115
- M6-3-2115

CARDINAL DIRECTION & DETOUR SIGNS

NORTH	M3-1-2412
EAST	M3-2-2412
SOUTH	M3-3-2412
WEST	M3-4-2412
DETOUR	M4-8-2412

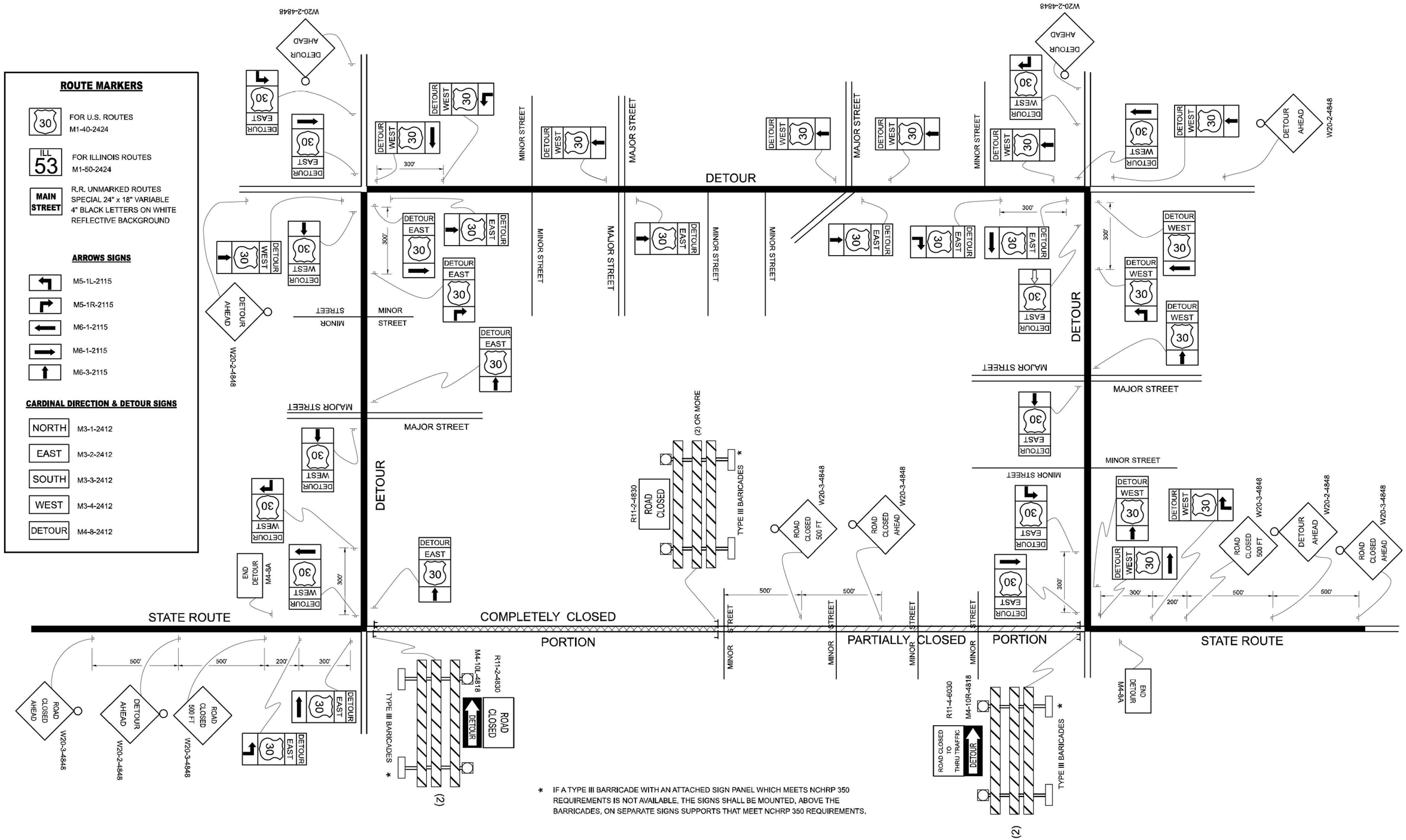

* IF A TYPE III BARRICADE WITH AN ATTACHED SIGN PANEL WHICH MEETS NCHRP 350 REQUIREMENTS IS NOT AVAILABLE, THE SIGNS SHALL BE MOUNTED, ABOVE THE BARRICADES, ON SEPARATE SIGNS SUPPORTS THAT MEET NCHRP 350 REQUIREMENTS.

USER NAME = brad.gagliano	DESIGNED -	REVISED - 10-18-02	
	DRAWN -	REVISED - R. BORO 09-14-09	
PLOT SCALE = 0.08333317 ' / in.	CHECKED -	REVISED -	
PLOT DATE = 8/30/2023	DATE -	REVISED -	

STATE OF ILLINOIS
DEPARTMENT OF TRANSPORTATION

DETOUR SIGNING FOR CLOSING STATE HIGHWAYS

SCALE: NONE | SHEET 1 OF 1 SHEETS | STA. ____ | TO STA. ____

F.A. RTE.	SECTION	COUNTY	TOTAL SHEETS	SHEET NO.
80	FAI 80 23 Bridge Replacement 2	COOK	158	156
	TC-21	CONTRACT NO. 62W20		
	ILLINOIS FED. AID PROJECT			

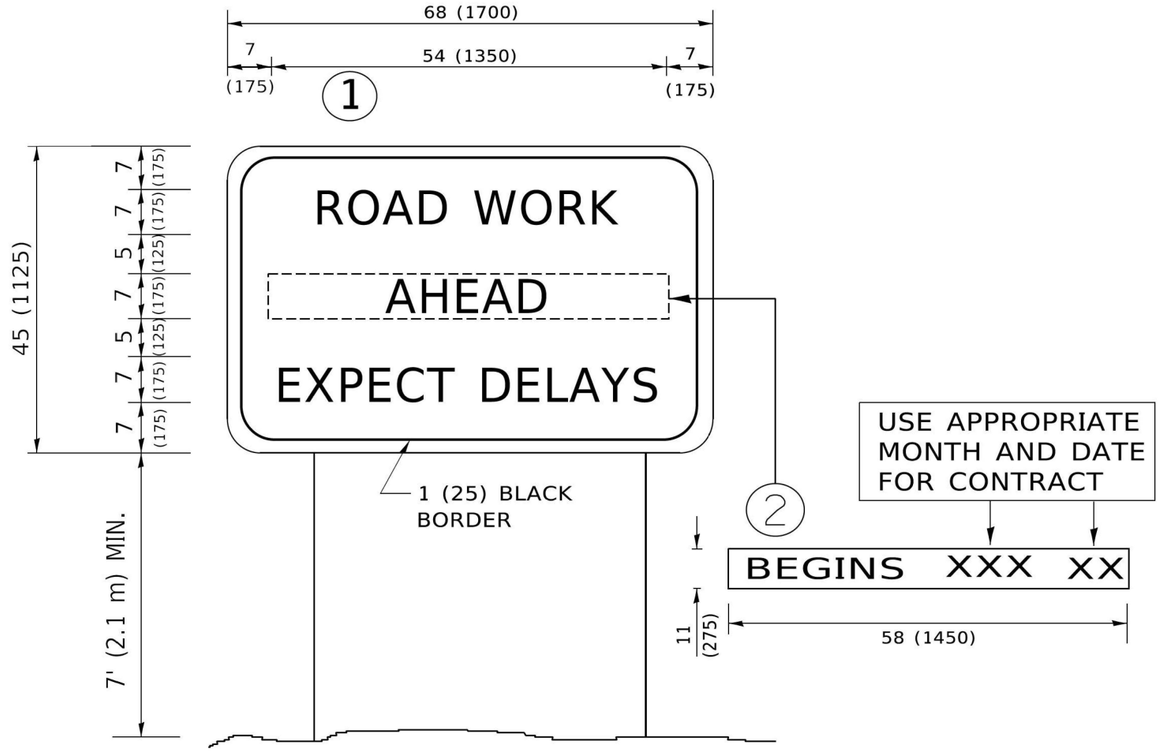

NOTES:

1. USE BLACK LETTERING ON ORANGE BACKGROUND.
2. ERECT SIGNS IN ADVANCE OF THE LOCATION FOR THE "ROAD CONSTRUCTION AHEAD" SIGN AT LOCATIONS AS DIRECTED BY THE ENGINEER.
3. ERECT SIGN (1) WITH INSTALLED PANEL (2) ONE WEEK PRIOR TO THE START OF CONSTRUCTION.
4. REMOVE PANEL (2) SOON AFTER THE START OF CONSTRUCTION.
5. SEE SPECIAL PROVISION FOR "TEMPORARY INFORMATION SIGNING" FOR ADDITIONAL INFORMATION.
6. ONE SIGN ASSEMBLY EQUALS 25.70 SQ. FT. (2.3 SQ. M.)
7. SHALL BE PAID FOR AS TEMPORARY INFORMATION SIGNING.

ALL DIMENSIONS ARE IN INCHES (MILLIMETERS) UNLESS OTHERWISE SHOWN.

USER NAME = footem]	DESIGNED -	REVISED - R. MIRS 09-15-97
	DRAWN -	REVISED - R. MIRS 12-11-97
PLOT SCALE = 50.0000 ' / In.	CHECKED -	REVISED -T. RAMMACHER 02-02-99
PLOT DATE = 3/4/2019	DATE -	REVISED - C. JUCIUS 01-31-07

STATE OF ILLINOIS
DEPARTMENT OF TRANSPORTATION

ARTERIAL ROAD INFORMATION SIGN

SCALE: NONE | SHEET 1 OF 1 SHEETS | STA. | TO STA.

F.A.I RTE.	SECTION	COUNTY	TOTAL SHEETS	SHEET NO.
80	FAI 80 23 Bridge Replacement 2	COOK	158	157
	TC-22	CONTRACT NO. 62W20		
	ILLINOIS FED. AID PROJECT			

STRUCTURE WEIGHTS	
STRUCTURE WEIGHT	STRUCTURE TYPE
2.88 TONS	BASE SECTION
1.10 TONS	LID SECTION

1

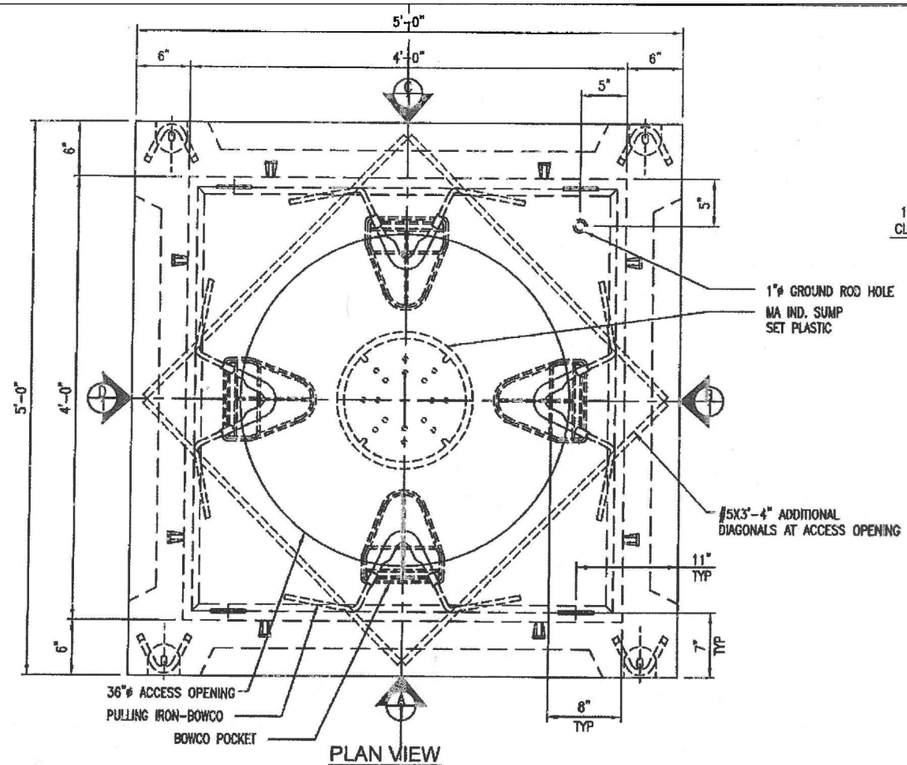

PLAN VIEW
SCALE: 3/41 = 1'-0"

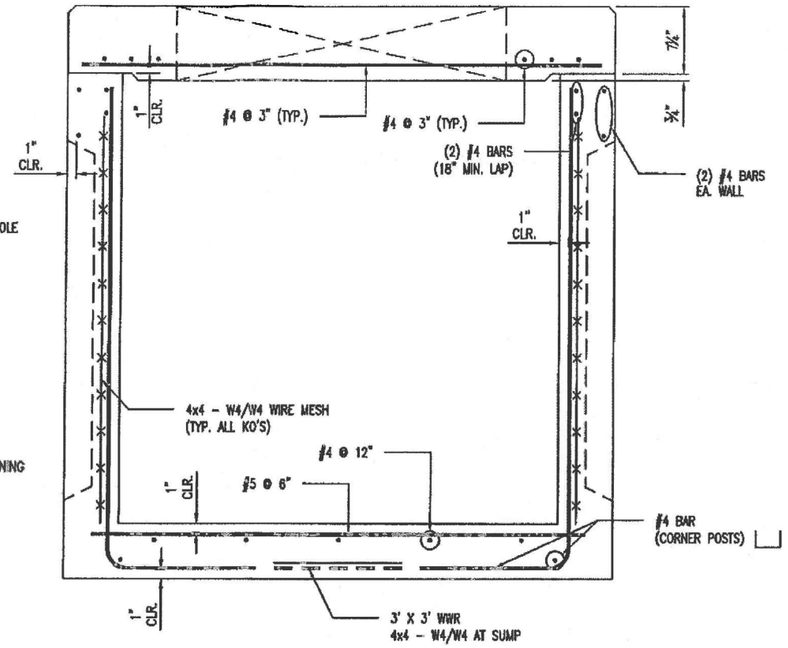

STEEL REINFORCEMENT
SCALE: 3/4" = 1'-0"

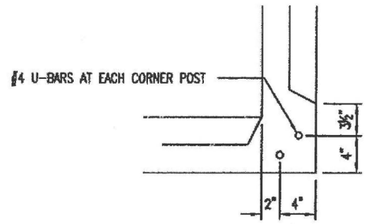

CORNER POST DETAIL
SCALE: 3/4" = 1'-0"

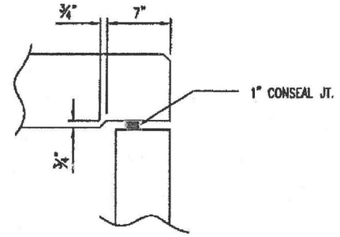

LID JOINT DETAIL
SCALE: 3/4" = 1'-0"

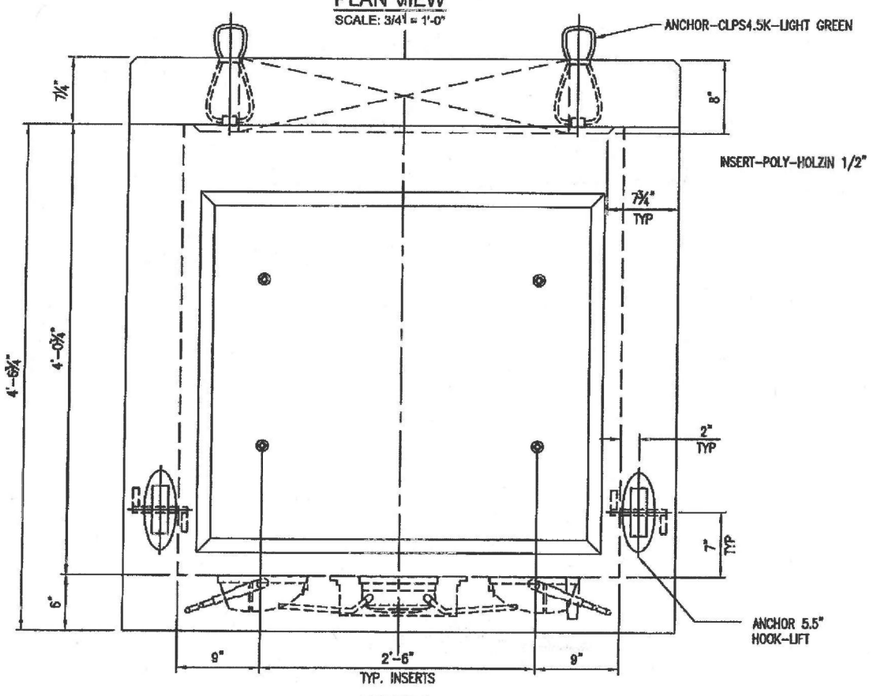

VIEW A
VIEW C IS A MIRROR IMAGE
SCALE: 3/4" = 1'-0"

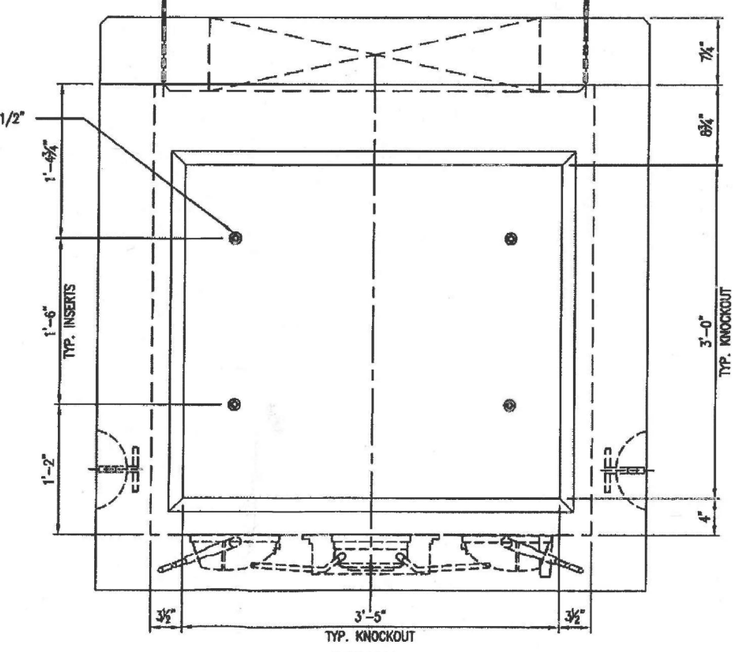

VIEW B
VIEW D IS A MIRROR IMAGE
SCALE: 3/4" = 1'-0"

DESIGN NOTES:

1. TOP SLAB CONCRETE MIN. COMPRESSIVE STRENGTH 6000 PSI @ 28 DAYS & BASE 5,000 PSI.
2. STEEL REINFORCEMENT REBAR - ASTM 615, GRADE 60.
3. DESIGN LOADING PER BALTIMORE CITY HS-25 DESIGN CRITERIA.
4. EARTH COVER = 1'-0" - 5'-0"
5. GROUND WATER @ 3'-0" BELOW GRADE.

REVISION TABLE			
REV	REV DATE	BY	DESCRIPTION
1			
2			

Oldcastle Precast®
CHESAPEAKE REGION
9115 MASSAPONAX CHURCH ROAD, FREDERICKSBURG, VA 22407
OFFICE 540-899-9300, FAX 540-899-2369
1491 TRUXELL ROAD, EDGEWOOD, MD 21040
OFFICE 410-298-1200, FAX 410-612-1214

THIS DOCUMENT IS THE PROPERTY OF OLDCASTLE PRECAST, INC. IT IS SUBMITTED FOR REFERENCE PURPOSES ONLY AND SHALL NOT BE USED IN ANY WAY INJURIOUS TO THE INTERESTS OF SAID COMPANY. COPYRIGHT © 2013 OLDCASTLE PRECAST, INC. ALL RIGHTS RESERVED.

4' x 4' x 4' BASE KO HS-25 & 5' x 5' TOP
SUBMITTAL - LAYOUT

BG&E 0040480-0041470

DATE	SALES	DRAWN	ENGINEER	CHECKED	SALES ORDER
03/10/17	-	CR	DJB	DJB	-

DRAWING NUMBER: 0040480-0041470
REVISION: REV DATE
SHEET: 1 OF 1

STATE OF MARYLAND
DAVID J. BLACK
No. 14684
PROFESSIONAL ENGINEER
8/2017

PROFESSIONAL CERTIFICATION. I, DAVID J. BLACK, HEREBY CERTIFY THAT THESE DOCUMENTS WERE PREPARED OR APPROVED BY ME, AND THAT I AM A DULY LICENSED PROFESSIONAL ENGINEER UNDER THE LAWS OF THE STATE OF MARYLAND, LICENSE NO. 14684, EXPIRATION DATE NOVEMBER 18, 2017

USER NAME = mmathews	DESIGNED -	REVISED -
	DRAWN -	REVISED -
	CHECKED -	REVISED -
PLOT DATE = 5/4/2026	DATE -	REVISED -

STATE OF ILLINOIS
DEPARTMENT OF TRANSPORTATION

UTILITY VAULT DETAIL

SCALE: | SHEET 1 OF SHEETS | STA. | TO STA.

F.A. I RTE.	SECTION	COUNTY	TOTAL SHEETS	SHEET NO.
80	FAI 80 23 Bridge Replacement 2	COOK	158	158
		CONTRACT NO. 62W20		
	ILLINOIS	FED. AID PROJECT		