STATE OF ILLINOIS
DEPARTMENT OF TRANSPORTATION

ROUTE NO.	SECTION	COUNTY	TOTAL SHEETS	SHEET NO.
346	*	LAKE	469	342
FED. ROAD DIST. NO.		ILLINOIS	FED. AID PROJECT-	

SHEET NO. - 8
16 - SHEETS

* 125X-HB-(1&2) R-1 CONTRACT * 60826

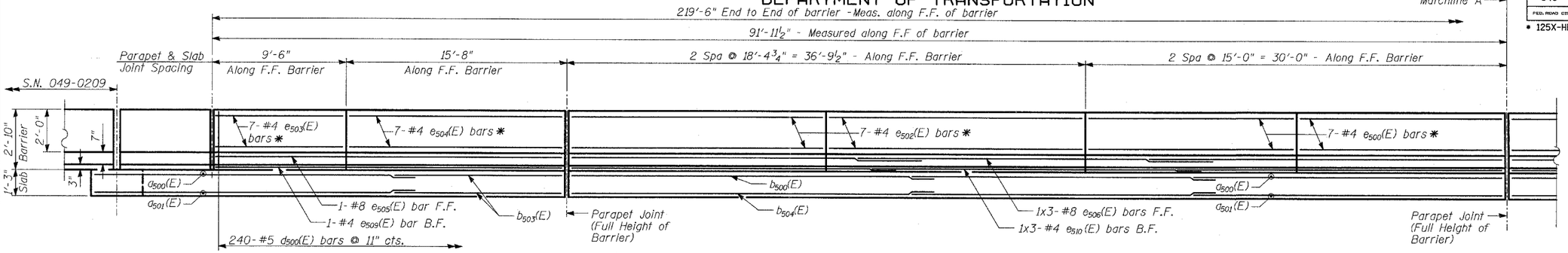

INSIDE ELEVATION OF BARRIER

* See Section D-D

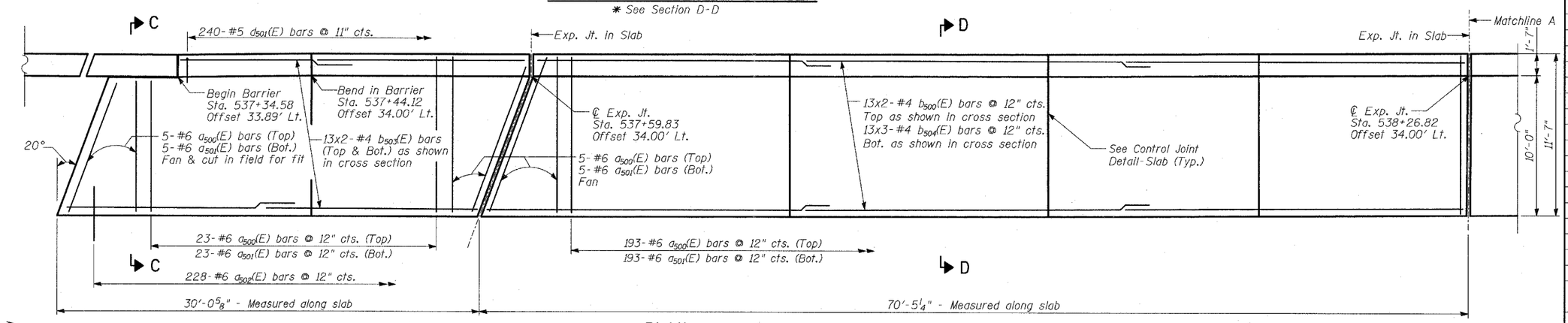

PLAN

BILL OF MATERIAL

Bar	No.	Size	Length	Shape
a500(E)	231	#6	12'-8"	
a501(E)	231	#6	11'-3"	
a502(E)	228	#6	2'-6"	
b500(E)	39	#4	35'-11"	
b501(E)	39	#4	31'-0"	
b502(E)	26	#4	37'-3"	
b503(E)	52	#4	15'-9"	
b504(E)	39	#4	24'-6"	
b505(E)	52	#4	23'-8"	
d500(E)	240	#5	5'-7"	
d501(E)	240	#5	7'-5"	
d502(E)	3	#6	4'-5"	
d503(E)	5	#6	8'-11"	
e500(E)	56	#4	14'-9"	
e501(E)	14	#4	18'-6"	
e502(E)	14	#4	18'-1"	
e503(E)	7	#4	9'-3"	
e504(E)	7	#4	15'-4"	
e505(E)	1	#8	24'-10"	
e506(E)	3	#8	25'-2"	
e507(E)	3	#8	32'-11"	
e508(E)	1	#8	37'-3"	
e509(E)	1	#4	24'-10"	
e510(E)	3	#4	23'-4"	
e512(E)	4	#4	23'-8"	
e513(E)	2	#4	19'-6"	
Concrete Superstructure			CU YD	150
Reinforcement Bars, Epoxy Coated			Pound	18690
Protective Coat			SQ YD	336

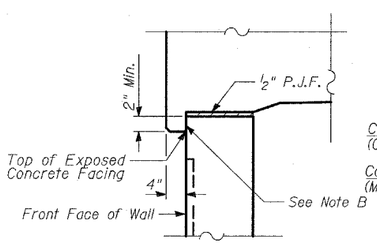

DETAIL A

Note B:
Bond Breaker membrane on top and front of fascia wall.

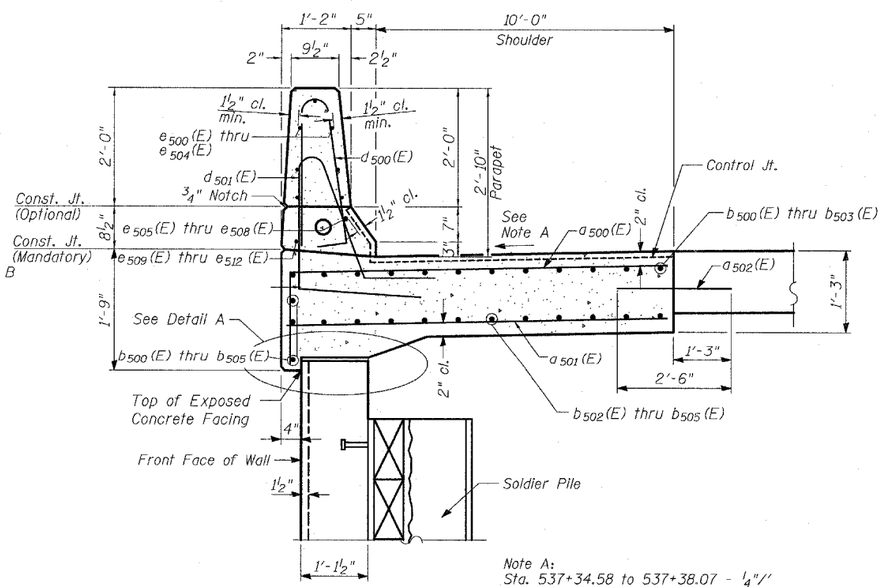

SECTION D-D

Note A:
Sta. 537+34.58 to 537+38.07 - ¼"/'
Sta. 537+38.07 to 538+04.28 - Varies ¼"/' to ½"/'
Sta. 538+04.28 to 539+54.75 - ½"/'

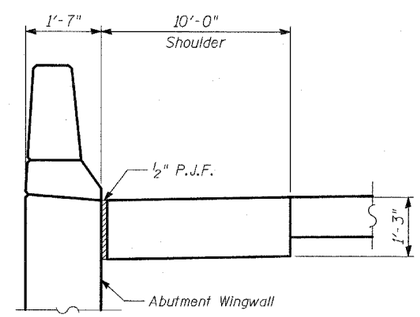

SECTION C-C

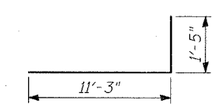

BAR a500(E)

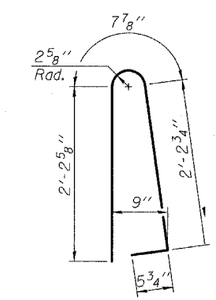

BAR d500(E)

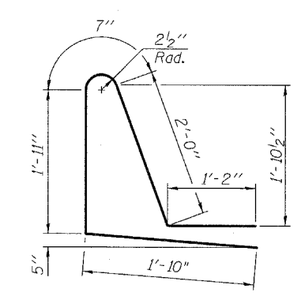

BAR d501(E)

LAP SPLICES

Bar	Lap
#4	1'-8"
#5	2'-2"
#6	2'-7"
#8	4'-6"

NOTES

1. Offsets are measured from ℄ & P.G.L. NB US 41.
2. Work this sheet with Sheets 9 thru 10 of 16.
3. Bars indicated thus 20x3-#5 etc. indicates 20 lines of bars with 3 lengths per line.

TY·LIN INTERNATIONAL

DESIGNED	MB
CHECKED	AD
DRAWN	DE
CHECKED	AD

WALL P
ANCHORAGE SLAB AND PARAPET
(1 OF 2)

FAP 346 (U.S. ROUTE 41 - SKOKIE HIGHWAY) OVER ILLINOIS ROUTE 132
SECTION 125X-HB-(1&2)R-1
LAKE COUNTY
S.N. 049-W037