STATE OF ILLINOIS
DEPARTMENT OF TRANSPORTATION

| ROUTE NO. | SECTION | COUNTY | TOTAL SHEETS | SHEET NO. |
|---|---|---|---|---|
| 346 | * | LAKE | 469 | 370 |
| FED. ROAD DIST. NO. | | ILLINOIS | FED. AID PROJECT- | |

SHEET NO. - 2
3 - SHEETS

* 125X-HB-(1&2) R-1 CONTRACT # 60826

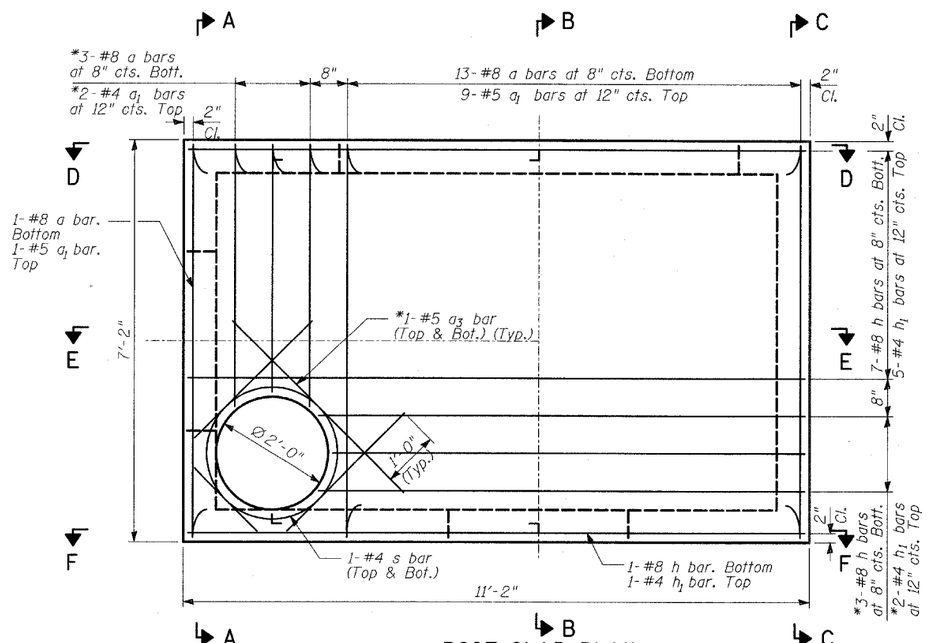


ROOF SLAB PLAN

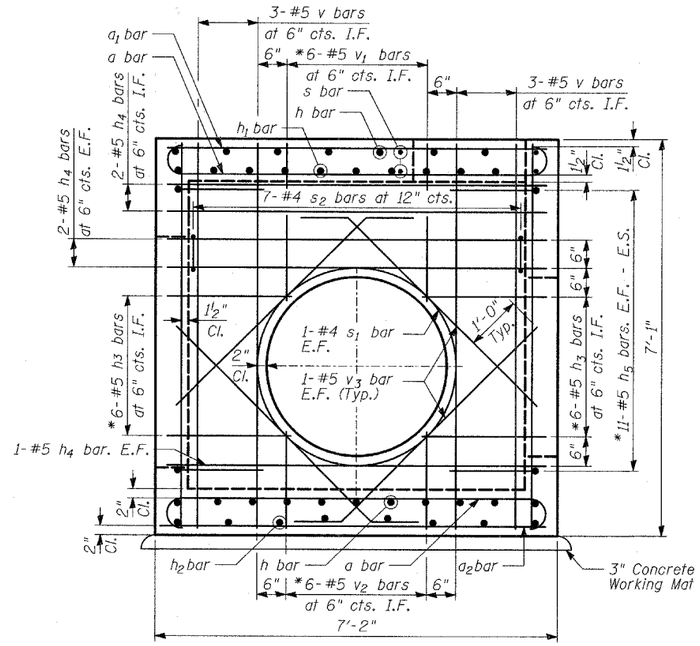


SECTION A-A

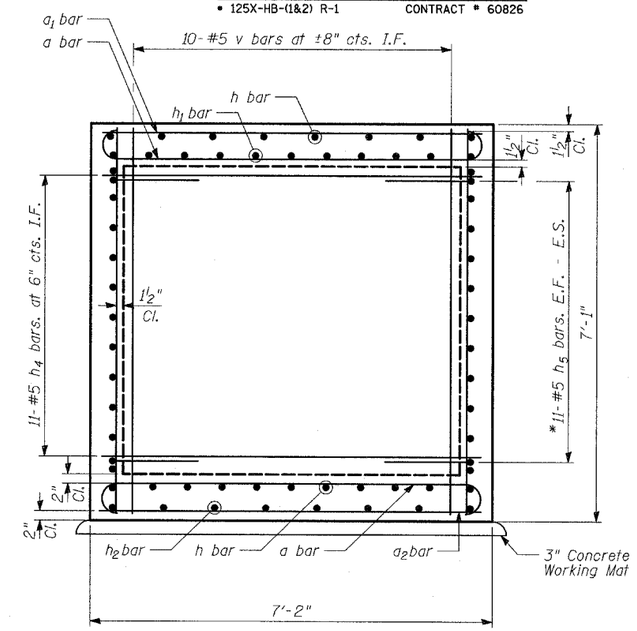


SECTION C-C

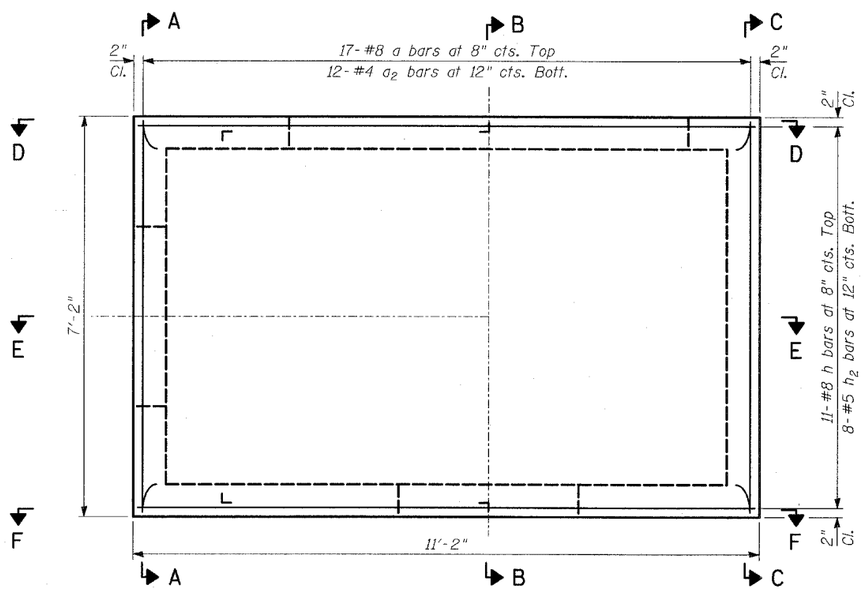


BOTTOM SLAB PLAN

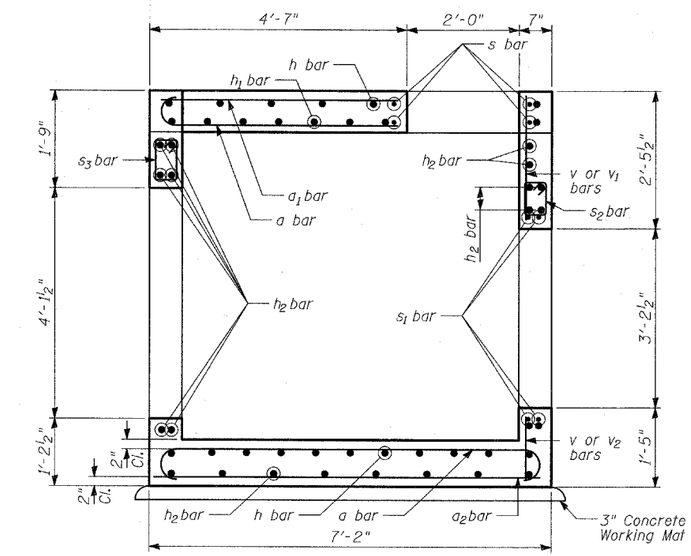


SECTION B-B

TYLIN INTERNATIONAL

| | |
|---|---|
| DESIGNED | MAF |
| CHECKED | PL |
| DRAWN | MAF |
| CHECKED | PL |

* Cut bars to fit in field.
E.F. - denotes Each Face
E.S. - denotes Each Side
I.F. - denotes Inside Face
O.F. - denotes Outside Face

## NOTES:

1. All dimensions and elevations shall be field verified prior to construction.
2. Concrete pipe sizes shall be coordinated with openings provided into junction chamber before pouring concrete.
3. Manhole Frame, Ladder Rungs, and any inserts installation shall be coordinated with Roadway Plans.
4. Concrete cover for reinforcement steel to be 2" unless otherwise noted.
5. All concrete edges shall be chamfered 1 inch.
6. All lap splices marked on the drawings are minimum.
7. Concrete Compressive Strength fc' = 3,500 psi.
8. Steel Yield Strength = 60,000 psi.
9. Work this Sheet with Sheets 1 and 3 of 3.

JUNCTION CHAMBER 52
DETAILS (1 OF 2)

FAP 346 (U.S. ROUTE 41 - SKOKIE HIGHWAY) OVER ILLINOIS ROUTE 132
SECTION 125X-HB-(1&2)R-1
LAKE COUNTY
S.N.