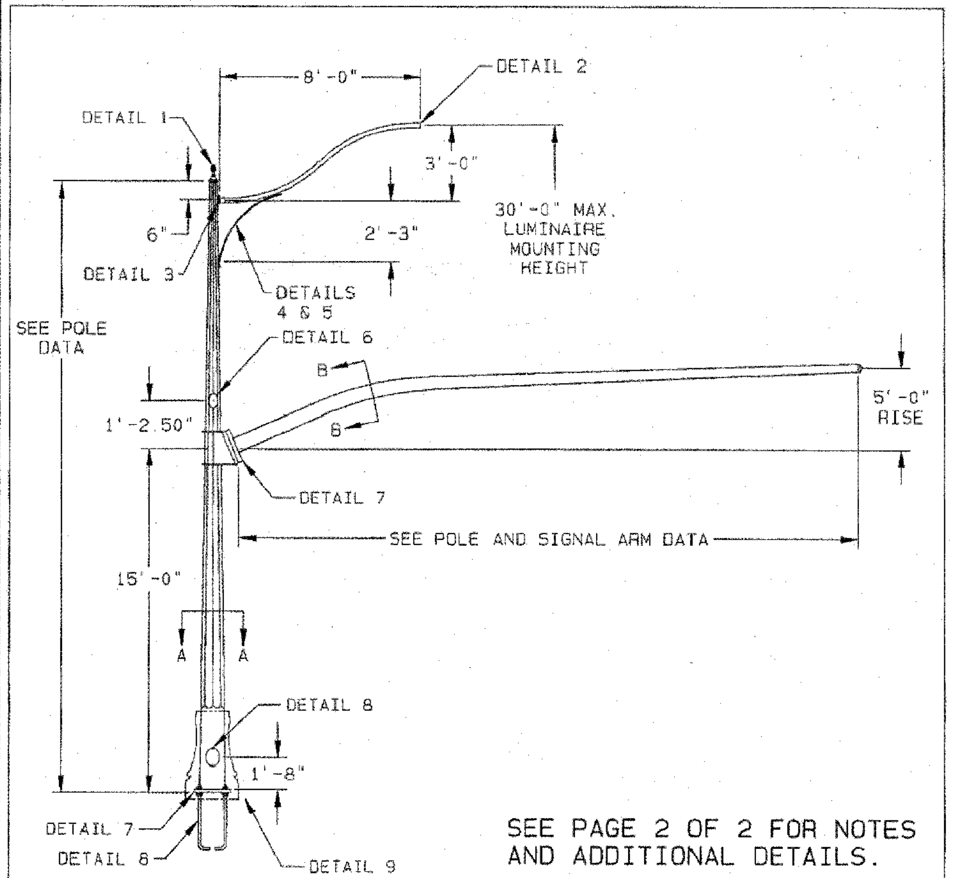

SEE PAGE 2 OF 2 FOR NOTES AND ADDITIONAL DETAILS.

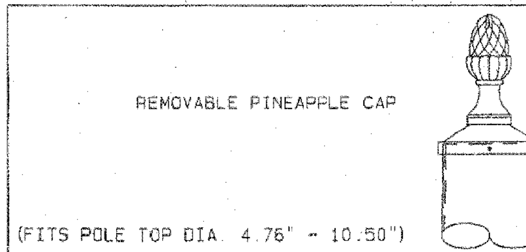

DETAIL 1 — PINEAPPLE CAP ASSEMBLY

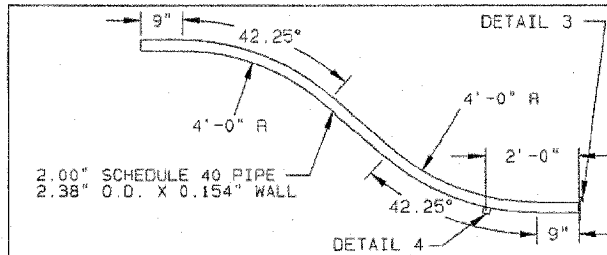

DETAIL 2 — LUMINAIRE ARM

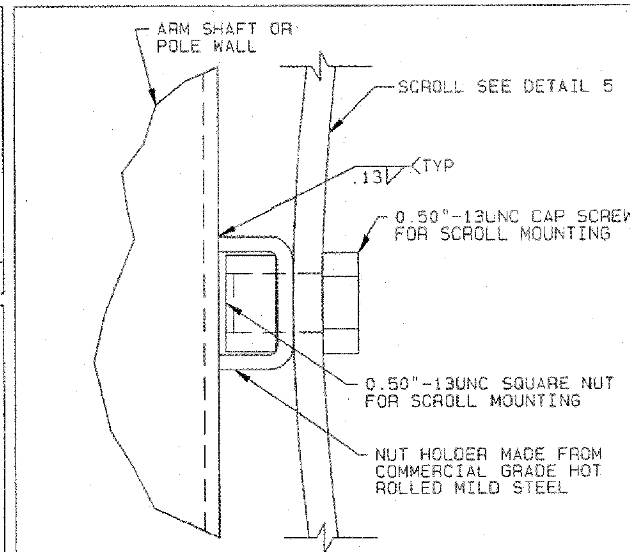

DETAIL 4 — SCROLL ATTACHMENT

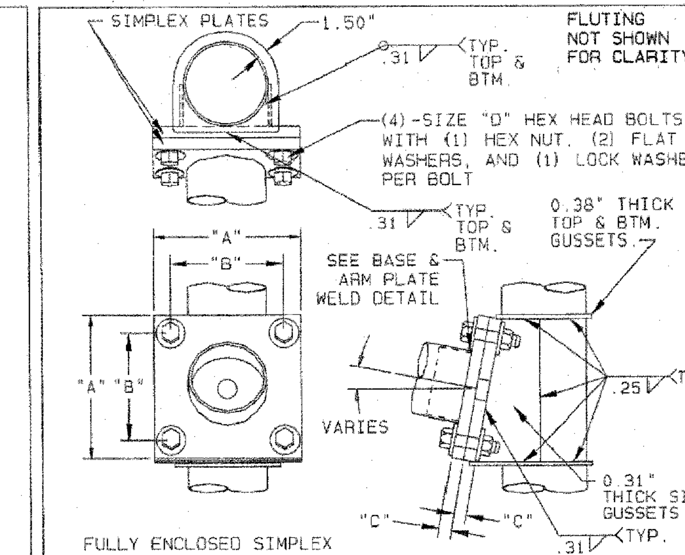

DETAIL 7 — SINGLE SIGNAL ARM ATTACHMENT

SIGNAL ARM ATTACHMENT DATA

ARM SPAN (FT)	"A" (IN)	"B" (IN)	"C" (IN)	"D"
20.00	17.25	14.00	1.75	1.25" X 5.25"

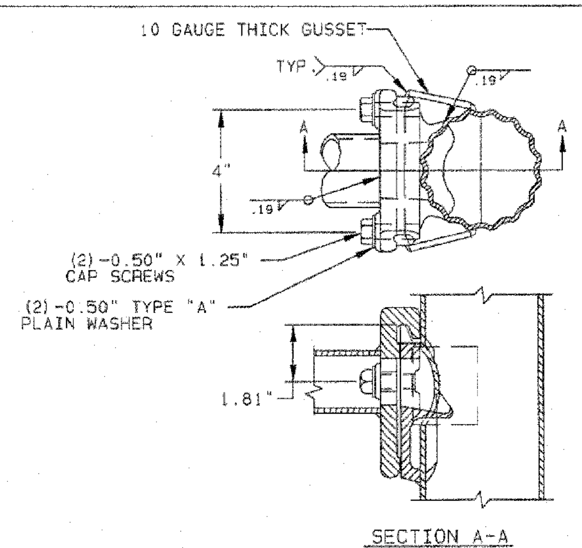

DETAIL 3 — LUMINAIRE ARM ATTACHMENT

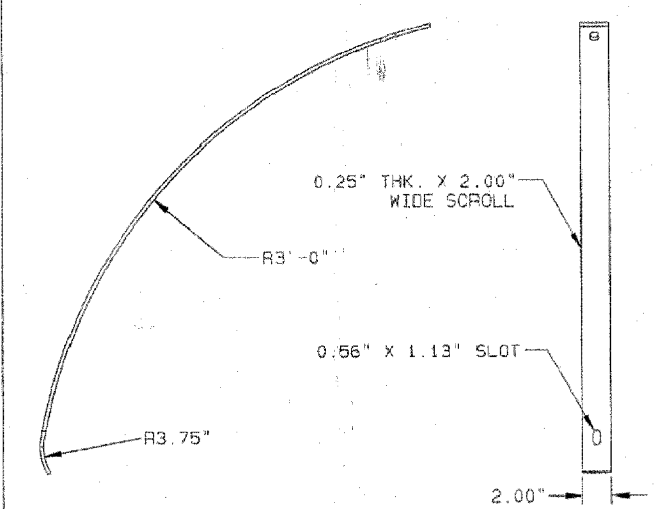

DETAIL 5 — SCROLL ARM

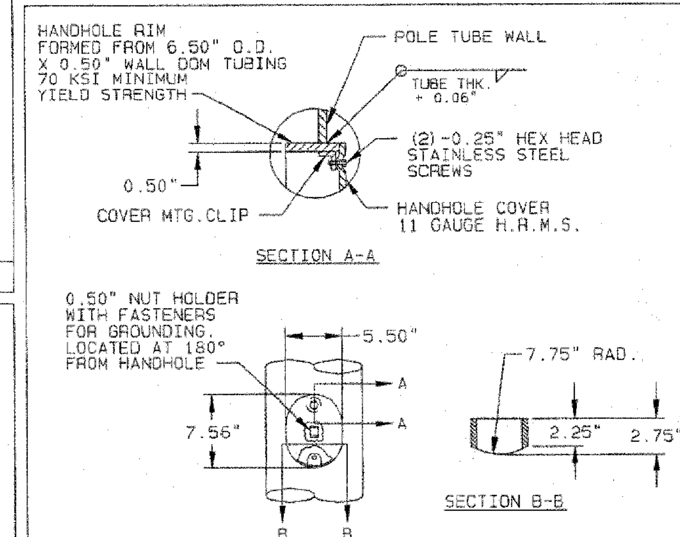

DETAIL 8 — SEMI-FLUSH HANDHOLE

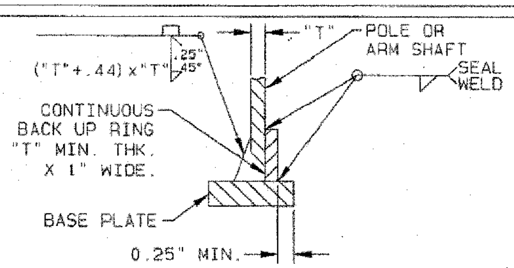

BASE AND ARM PLATE WELD

OPTION 1

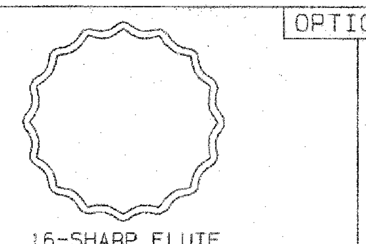

SECTION A-A

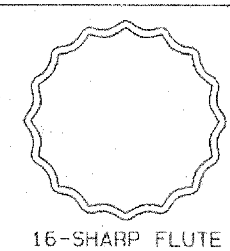

SECTION B-B

OPTION 2

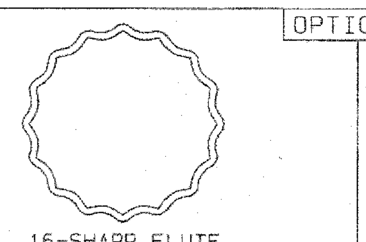

SECTION A-A

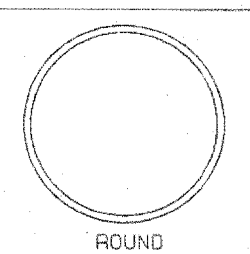

SECTION B-B

ALL ANGLES MEASURED CLOCKWISE FROM HAND-HOLE AS VIEWED FROM SMALL END OF POLE.

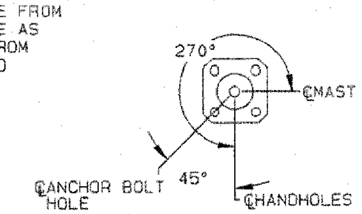

RADIAL INDEX

BASE COAT: HOT DIP GALVANIZE

TOP COAT: TGIC OR URETHANE POLYESTER POWDER

COLOR: BLACK

VALMONT SPEC: F283A

FINISH NOTE

(T = SHAFT WALL THICKNESS)

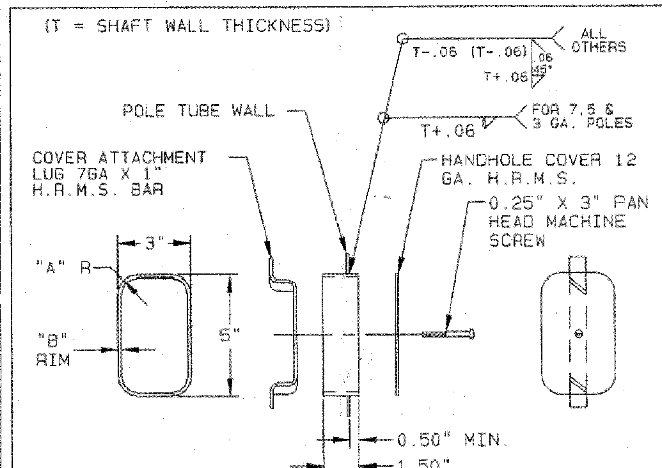

POLE GA.	"A"	"B"
7, 5 & 3	1.00"	0.179"
ALL OTHERS	0.50"	0.375"

DETAIL 6 — HANDHOLE

REV	DRAWN BY-DATE	CHECK BY-DATE	DESCRIPTION
—	BCM 09/18/07	BCM 09/20/07	—

SOLD TO:
SHIP TO:
P.O. #:
AGENT: LIGHTING SOLUTIONS

JOB

TITLE TRAFFIC SIGNAL STRUCTURES

VALMONT INDUSTRIES, INC. RESERVES THE RIGHT TO INSTALL VARIOUS, ENGINEER APPROVED, MATERIAL HANGING ACCOMMODATIONS TO FACILITATE THE MANUFACTURING PROCESS.

valmont
Valley,NE 68064
(402) 359-2201

ORDER NUMBER: 4Z203-07
PAGE NUMBER: 1 OF 2
DRAWING NUMBER IL4Z20307
REV

FILE NAME = ...\trans\fin_dwg\690_7_det01.dgn
USER NAME = $USER$
PLOT SCALE = $SCALE$
PLOT DATE = 6/4/2008
DESIGNED -
DRAWN BAH
CHECKED APS
DATE -
REVISED -
REVISED -
REVISED -
REVISED -

STATE OF ILLINOIS
DEPARTMENT OF TRANSPORTATION

MISCELLANEOUS DETAILS

SCALE: | SHEET NO. OF SHEETS | STA. TO STA.

F.A. RTE.	SECTION	COUNTY	TOTAL SHEETS	SHEET NO.
	08-00273-00-TL	KANE	30	27

CONTRACT NO. 63053

FED. ROAD DIST. NO. | ILLINOIS | FED. AID PROJECT

PLAN: NOTE BOOK NO. — SURVEYED, PLOTTED, ALIGNMENT CHECKED, RT. OF WAY CHECKED, CADD FILE NAME — BY — DATE

PROFILE: NOTE BOOK NO. — SURVEYED, PLOTTED, GRADES CHECKED, B.M. NOTED, STRUCTURE NOTAT'NS CH'KD — BY — DATE