STATE OF ILLINOIS
DEPARTMENT OF PUBLIC WORKS & BUILDINGS
DIVISION OF HIGHWAYS

FOR INFORMATION ONLY

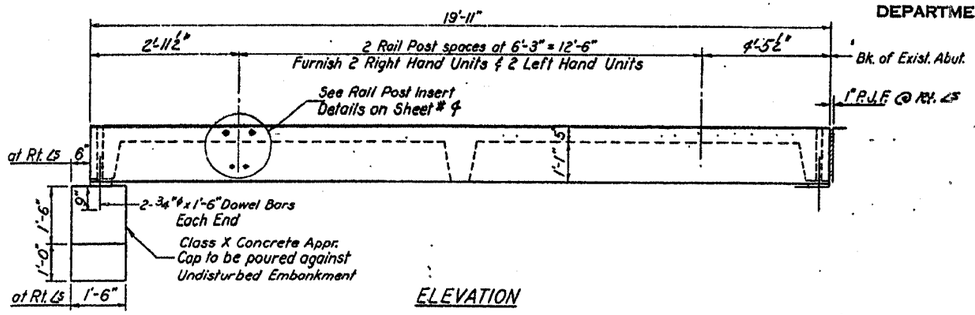

ELEVATION

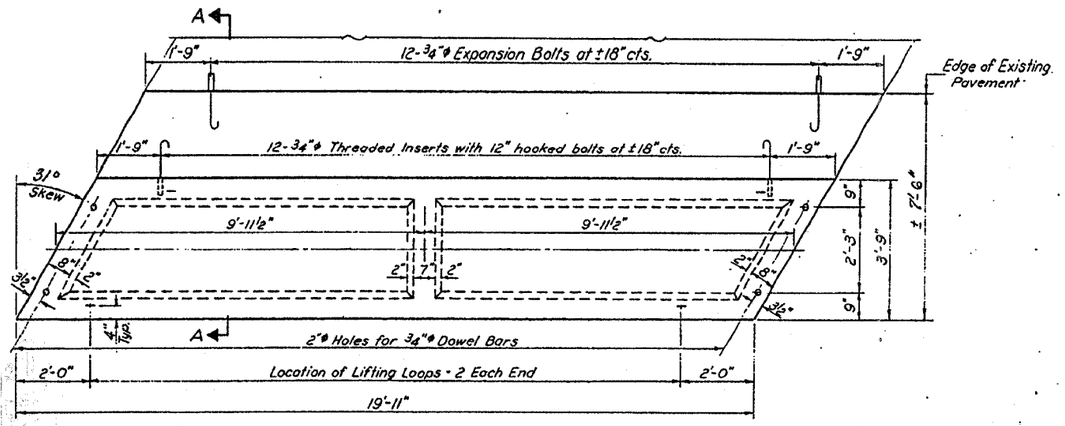

PARTIAL PLAN OF APPROACH

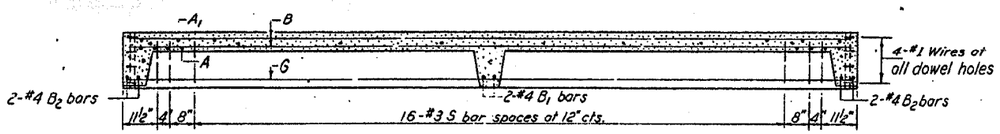

LONGITUDINAL SECTION

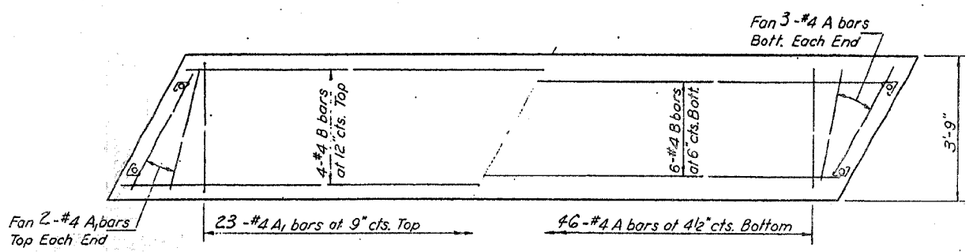

SLAB REINFORCEMENT

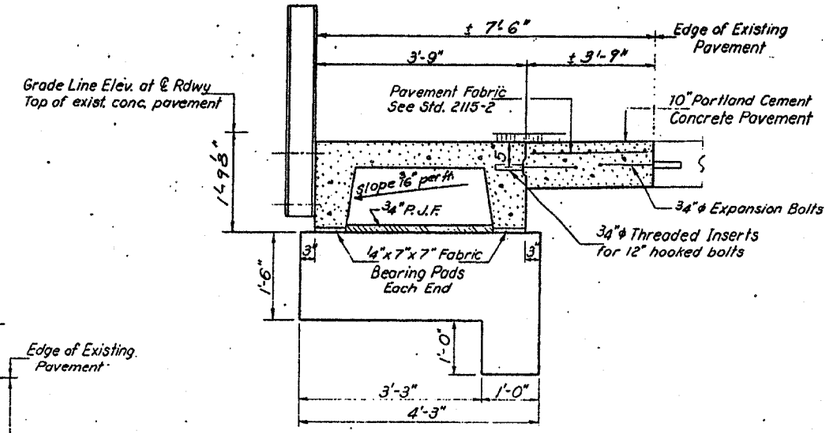

SECTION A-A

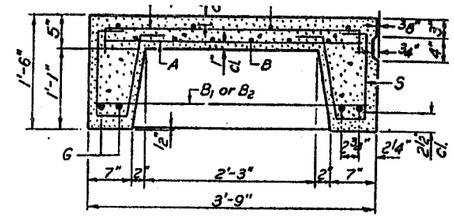

SECTION THRU PRECAST UNIT

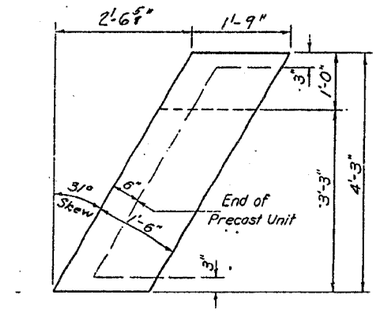

PLAN-APPR. CAP

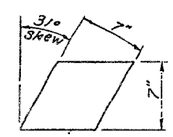

FABRIC BRG. PAD

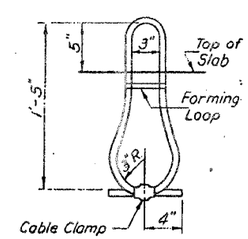

LIFTING LOOP DETAIL

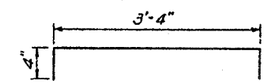

BAR A₁

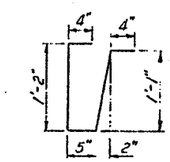

BAR S

BAR LIST - ONE UNIT

Reinforcement to be cast into slab

Bar	No.	Size	Length	Shape
A	52	#4	3'-3"	—
A₁	27	#4	4'-0"	⌐
B	10	#4	19'-6"	—
B₁	2	#4	3'-6"	—
B₂	4	#4	4'-0"	—
G	4	#10	19'-6"	—
S	42	#3	3'-4"	⌐

NOTES

Unless otherwise approved by the Engineer, lifting loops shall be ½"φ, 6x19 class wire rope with fiber core and shall have a minimum ultimate strength of 18,700 lbs. Loops shall be burned off after slab has been erected. Holes shall be drilled and anchor dowels grouted in place.

Cost of reinforcement and accessories cast into the slab unit, bearing pads, furnishing, drilling for, placing and grouting anchor dowels and ¾"φ hooked bolts is included in Unit bid price for "Precast Concrete Bridge Slab."

The Precast Concrete Bridge Slab shall be erected and aligned with the exterior face of the exterior Deck Beam after Deck Beams are in final position.

BILL OF MATERIAL

Item	Unit	Quantity
Precast Concrete Bridge Slab	Sq. Ft.	299
Portland Cement Concrete Pavement (10")	Sq. Yds.	33
Pavement Fabric	Sq. Yds.	33
Expansion Bolts ¾"φ	Each	48
Class X Concrete	Cu. Yds.	1.9

STRESSES

f_c = 4,500 psi.
f_c = 1,800 psi.
f_s = 20,000 psi
n = 8

DESIGNED Simon Uchimoto
CHECKED James Pence
DRAWN J.L. Armstrong

FEB. 26 1970
EXAMINED
ENGINEER OF BRIDGE AND TRAFFIC STRUCTURES
PASSED W. E. Baumann
ENGINEER OF DESIGN
APPROVED
CHIEF HIGHWAY ENGINEER

APPROACH DETAILS
S.B.I.RT. 3 SEC. 11 BR
WHITESIDE COUNTY