TYPICAL LEFT SHOULDER

STA 96+25 TO 178+75

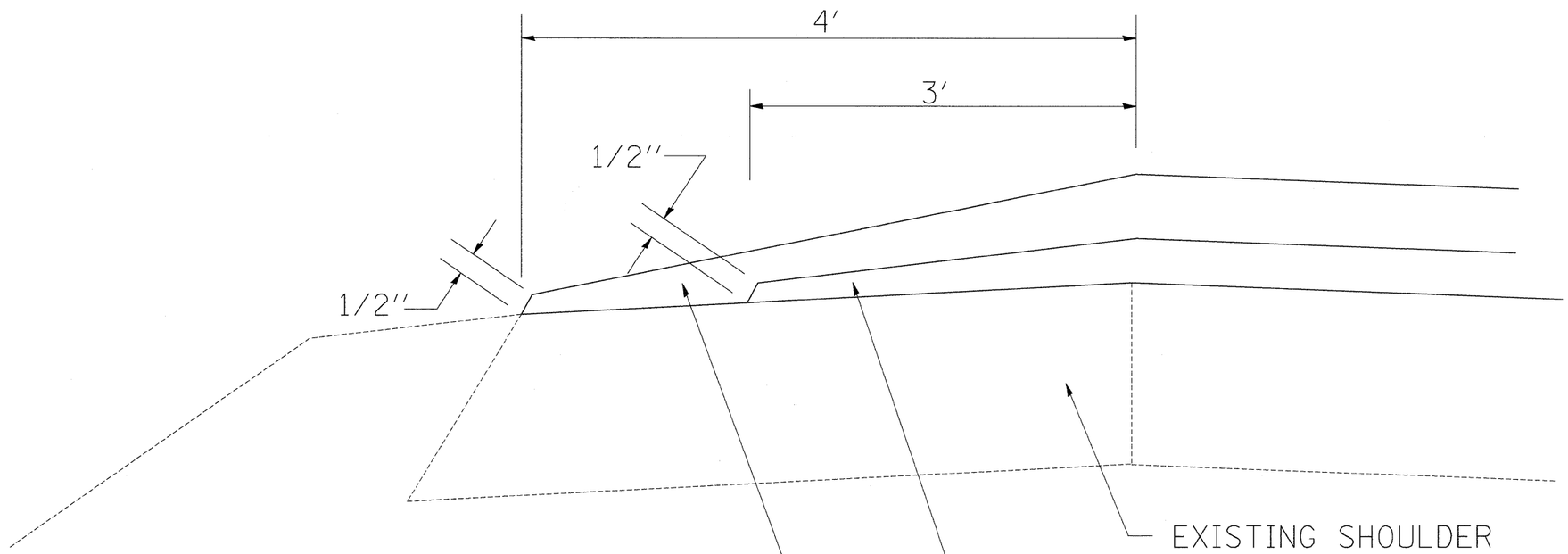

1" ~~POLYMERIZED~~ LEVELING BINDER (MM), N105

1-1/2" ~~POLYMERIZED~~ HMA SURFACE COURSE, MIX "E", N105 ⚠1

BITUMINOUS APPLICATION RATES

SURFACE MIXTURES: 119 LB/SY-IN

OTHER BITUMINOUS MIXTURES: 112 LB/SY-IN

BITUMINOUS MATERIAL (PRIME COAT): 0.000286 TON/SY

AGGREGATE (PRIME COAT): 0.0015 TON/SY

⚠1 REVISED 7-23-08

* D2 SPRING PATCHING 2007-2

FILE NAME = P:\1-80 resurfovr.dgn	USER NAME = grantpm	DESIGNED -	REVISED -	STATE OF ILLINOIS DEPARTMENT OF TRANSPORTATION	TYPICAL SECTIONS	F.A.I. RTE.	SECTION	COUNTY	TOTAL SHEETS	SHEET NO.
		DRAWN -	REVISED -			80	*	ROCK ISLAND	31	12
	PLOT SCALE = 50.000 ' / IN.	CHECKED -	REVISED -					CONTRACT NO. 64D34		
	PLOT DATE = Thu May 15 11:03:29 2008	DATE -	REVISED -		SCALE: SHEET NO. OF SHEETS STA. TO STA.	FED. ROAD DIST. NO.	ILLINOIS	FED. AID PROJECT		