F.A.U. RTE.	SECTION	COUNTY	TOTAL SHEETS	SHEET NO.
6208	07-00093-00-RP	KANKAKEE	43	33
MG2A# M2-096		CONTRACT NO.: 87342		

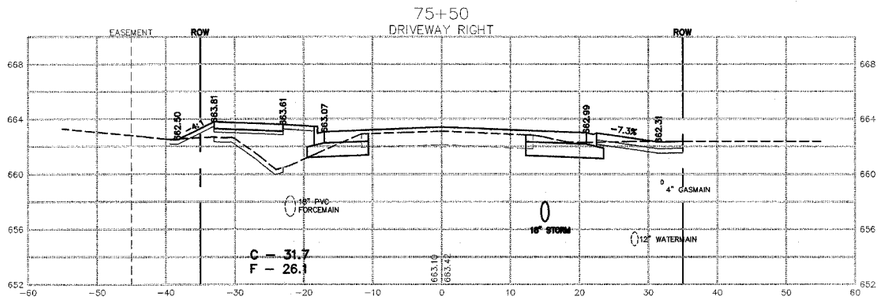

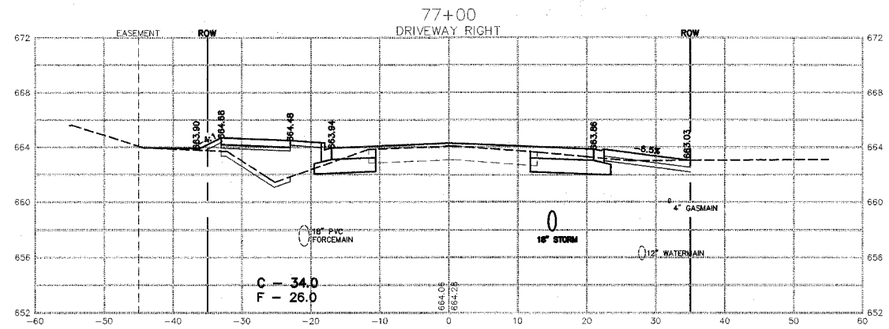

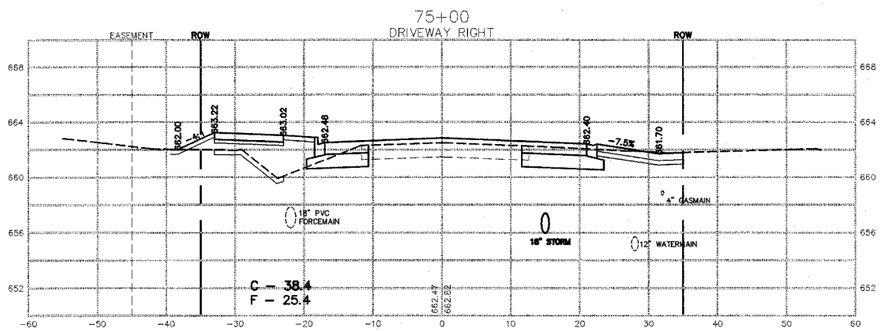

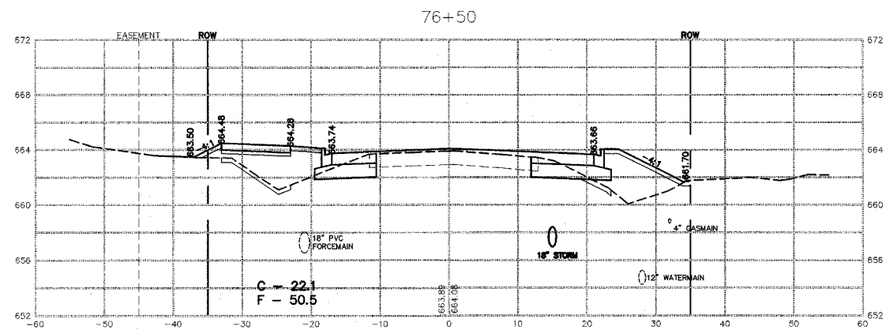

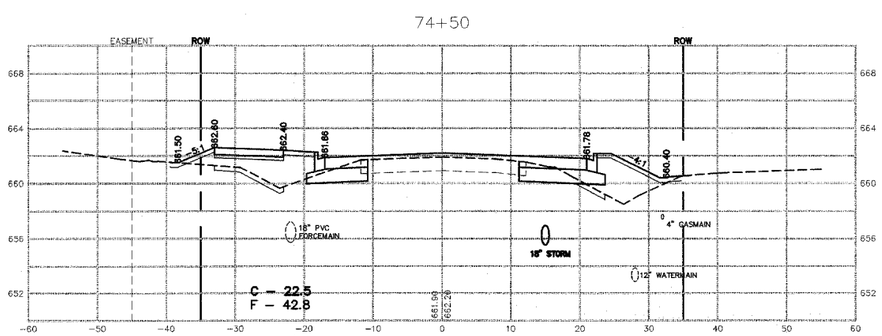

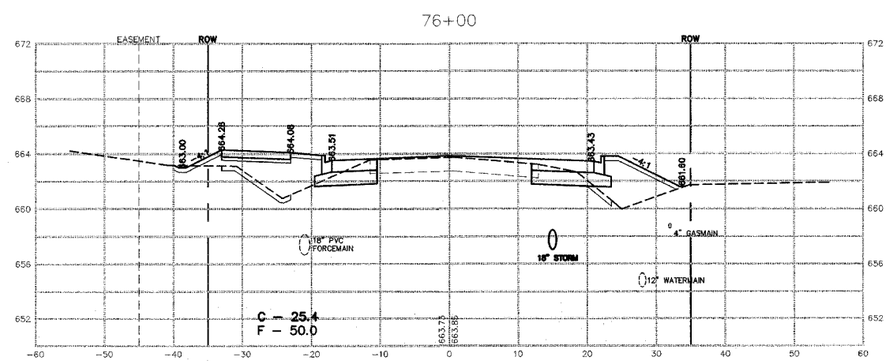

M. GINGERICH, GEREAUX & ASSOCIATES
240 N. Industrial Drive
Bradley, Illinois 60915
815-939-4921
FAX : 815-939-9810

REVISIONS

DATE	BY	DESCRIPTION
2/11/08	AJC/JWP	PER IDOT REVIEW
3/27/08	JWP	PER IDOT REVIEW

ILLINOIS DEPARTMENT OF TRANSPORTATION
CROSS SECTIONS SHEET
CARDINAL DRIVE

STA. 74+50 TO STA. 77+00

SCALE: VERTICAL 1"= 5' HORIZONTAL 1"= 10'

DRAWN BY: MJO/AJC

DATE: 1/4/08

CHECKED BY: JWP