CO054

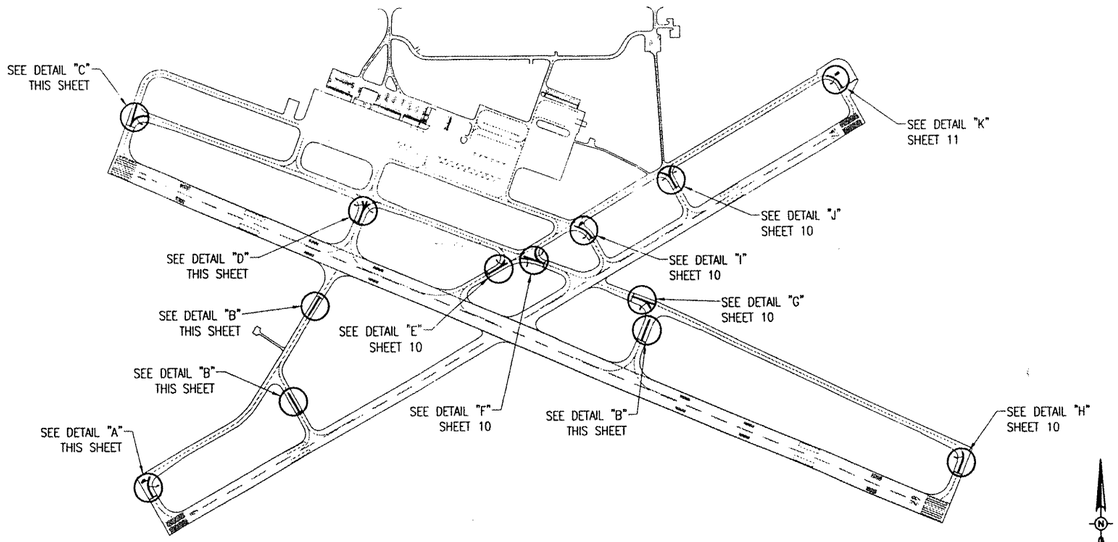

DETAIL "A"
NOT TO SCALE

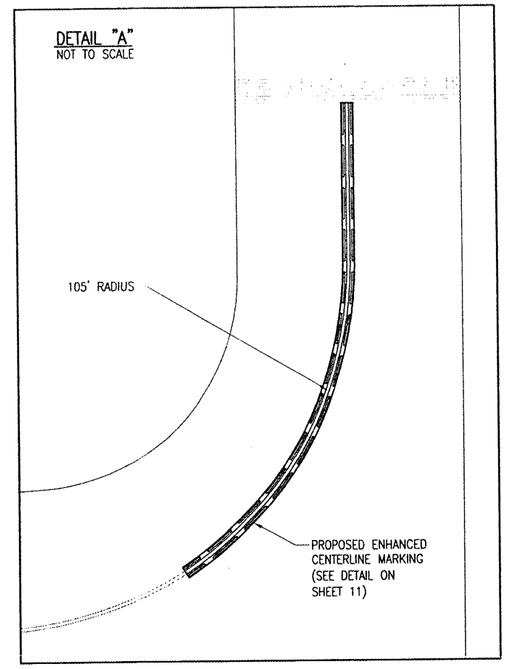

DETAIL "B"
NOT TO SCALE

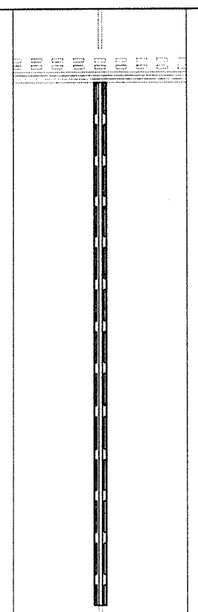

DETAIL "C"
NOT TO SCALE

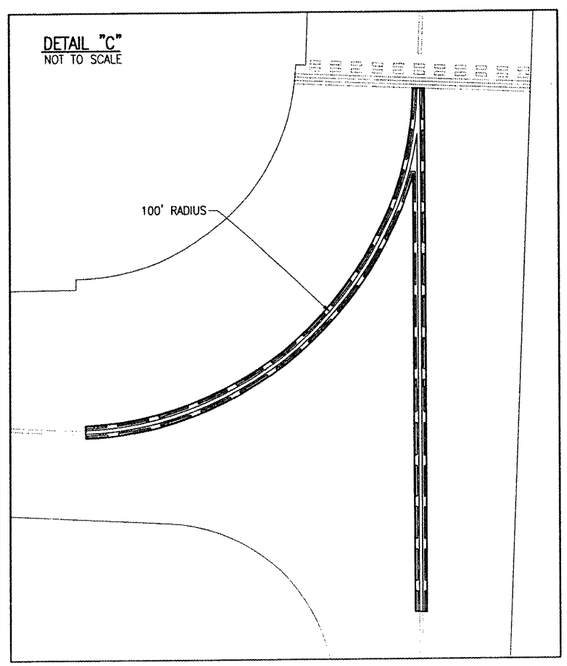

DETAIL "D"
NOT TO SCALE

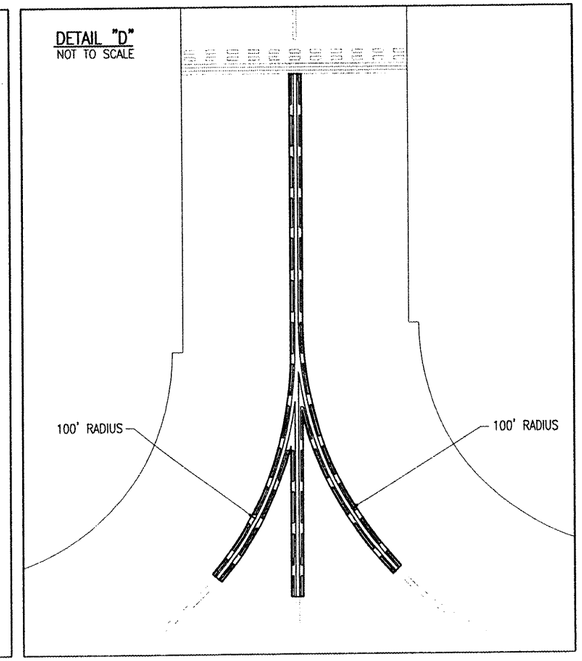

LEGEND

EXISTING IMPROVEMENTS

DATE	REVISION	BY

COLES COUNTY AIRPORT AUTHORITY

A.I.P. PROJ.: 3-17-0066-B21

IL PROJ.: MTO-3813

HD Project No. 08A00080 0800
Filename R-151MRK.DWG
Scale N/A
Date 04/23/08

LAYOUT	MDR	04/23/08
DRAWN	MDR	04/23/08
REVIEWED	CAH	05/01/08

HANSON

Hanson Professional Services Inc.
1705 South Grand Street
Springfield, Illinois 62703-2886
Offices Nationwide

PAVEMENT REPAIRS & ENHANCED MARKING

PROPOSED ENHANCED PAVEMENT MARKING DETAILS

9

9 of 11 Sheets

APR 11, 2008 4:15 PM HAGL000382
J:\REPORTS\COLES\08A00080\AIRPORT\SHEETS\R-151MRK.DWG - DETAILS A-D