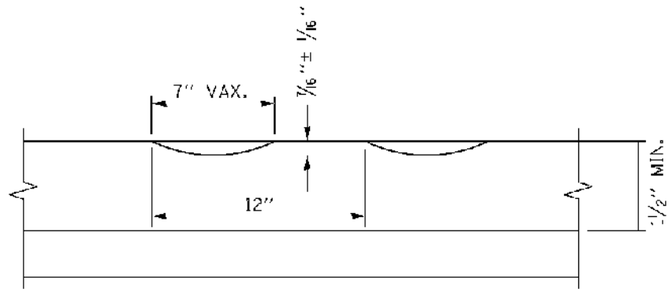

SECTION A-A

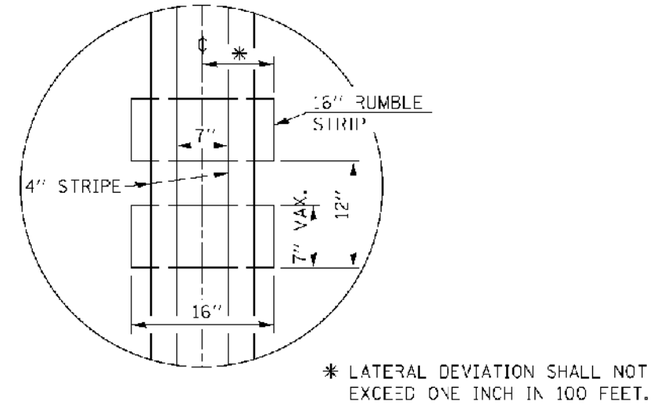

DETAIL B

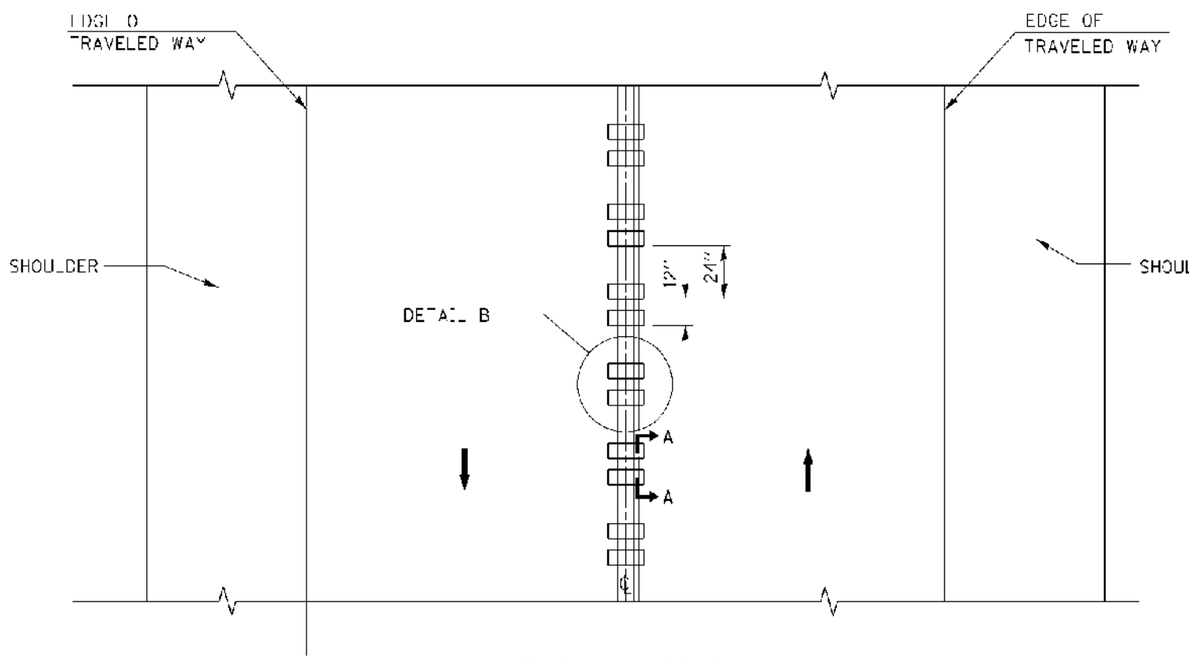

TWO-WAY ROAD

GENERAL NOTES

CENTERLINE RUMBLE STRIPS SHALL BE CONSTRUCTED ACCORDING TO SECTION 642 ALONG THE CENTERLINE OF PAVEMENT.

SEE STANDARD 780001 FOR OTHER STRIPING LAYOUTS.

RUMBLE STRIPS SHALL NOT BE PLACED ON BRIDGES.

ALL RUMBLE STRIPS SHALL BE MILLED.

CENTERLINE RUMBLE STRIPS SHALL BE CONTINUOUS THROUGH CONNECTIONS OF SIDEROADS WITH NO LEFT TURN LANES.

DISCONTINUE CENTERLINE RUMBLE STRIPS THROUGH THE LIMITS OF ALL LEFT TURN LANES, INCLUDING ANY LANE TAPER SECTIONS.

AFTER RUMBLE STRIPS ARE INSTALLED, THE PAVEMENT SURFACE SHALL BE SWEPT CLEAN PRIOR TO THE PLACEMENT OF THE NEW PAVEMENT MARKINGS.

WHERE USED, ADJUST SPACING OF RAISED REFLECTIVE PAVEMENT MARKERS TO FALL IN WIDER GAP BETWEEN RUMBLE STRIPS.

BASIS OF PAYMENT

THIS WORK WILL BE PAID FOR AT THE CONTRACT UNIT PRICE PER FOOT FOR CENTERLINE-RUMBLE STRIP OF THE WIDTH SPECIFIED.

HOT-SPRAY THERMOPLASTIC PAVEMENT MARKING WILL BE USED OVER THE RUMBLE STRIPS, AND WILL BE PAID FOR SEPARATELY.

COPYRIGHT © 2005 BY BAXTER & WOODMAN, INC.
STATE OF ILLINOIS - PROFESSIONAL DESIGN FIRM
LICENSE NO. - 184-001211 - EXPIRES 4/30/2015
5/22/2014 3:29:03 PM
...\plotdrv\pdf-BW_Default.pltcfg
...\PLOTS\00053-W0-17-PEN.tbl
\\corp.baxwood.com\projects\CrystalLake\ILDOT\00053-\40-Design\W0-17 138 Rt 47 to Rt 31\CADD-SURVEY\DRAWINGS\DDNS\DISTRICT ONE DETAILS - BD-11FF.dgn
263moc

FILE NAME - c:\pw_work\pwidot\crivokosgn\d4UB5ND\bd55.dgn	USER NAME - crivokosgn	DESIGNED - R. BORO	REVISED -
		DRAWN	REVISED
	PLOT SCALE = 50.0000 ' / in.	CHECKED	REVISED
	PLOT DATE - 5/4/2012	DATE - 08-06-2012	REVISED -

STATE OF ILLINOIS
DEPARTMENT OF TRANSPORTATION

RUMBLE STRIPES FOR CENTERLINE, NON-FREEWAY

SCALE: NONE | SHEET NO. 1 OF 1 SHEETS | STA. | TO STA.

F.A. RTE.	SECTION	COUNTY	TOTAL SHEETS	SHEET NO.
			65	58
	BD 55	CONTRACT NO.		
FED. ROAD DIST. NO. 1	ILLINOIS	F.C. AID PROJECT		