SINGH + ASSOCIATES, INC.
CONSULTING ENGINEERS

CONTROLLER SEQUENCE

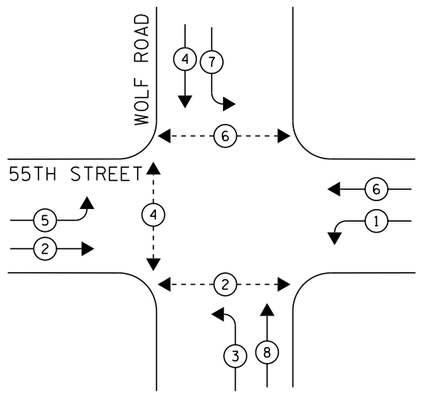

PHASE DESIGNATION DIAGRAM

EMERGENCY VEHICLE PREEMPTION SEQUENCE

DUAL ENTRY-ALL LEGS
PROTECTED/PERMITTED LEFT TURN PHASES

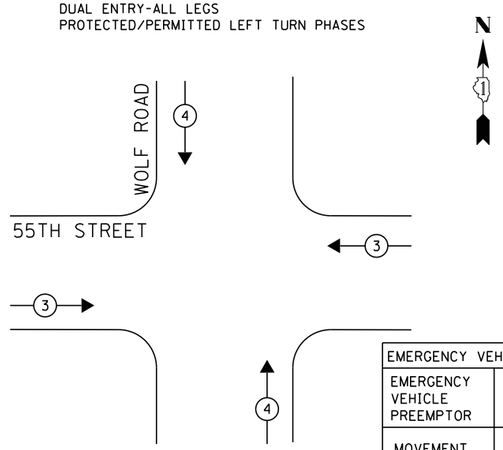

EMERGENCY VEHICLE PREEMPTORS		
EMERGENCY VEHICLE PREEMPTOR	3	4
MOVEMENT	⇄	⇅

LEGEND

- DUAL ENTRY PHASE
- SINGLE ENTRY PHASE
- O.L. OVERLAP
- PEDESTRIAN PHASE
- * NUMBER REFERS TO ASSOCIATED PHASE

[1] REPLACE TRAFFIC SIGNAL BACKPLATE

(1) REPLACE 16FT. PAINTED POST, RE-USE EXISTING FOUNDATION

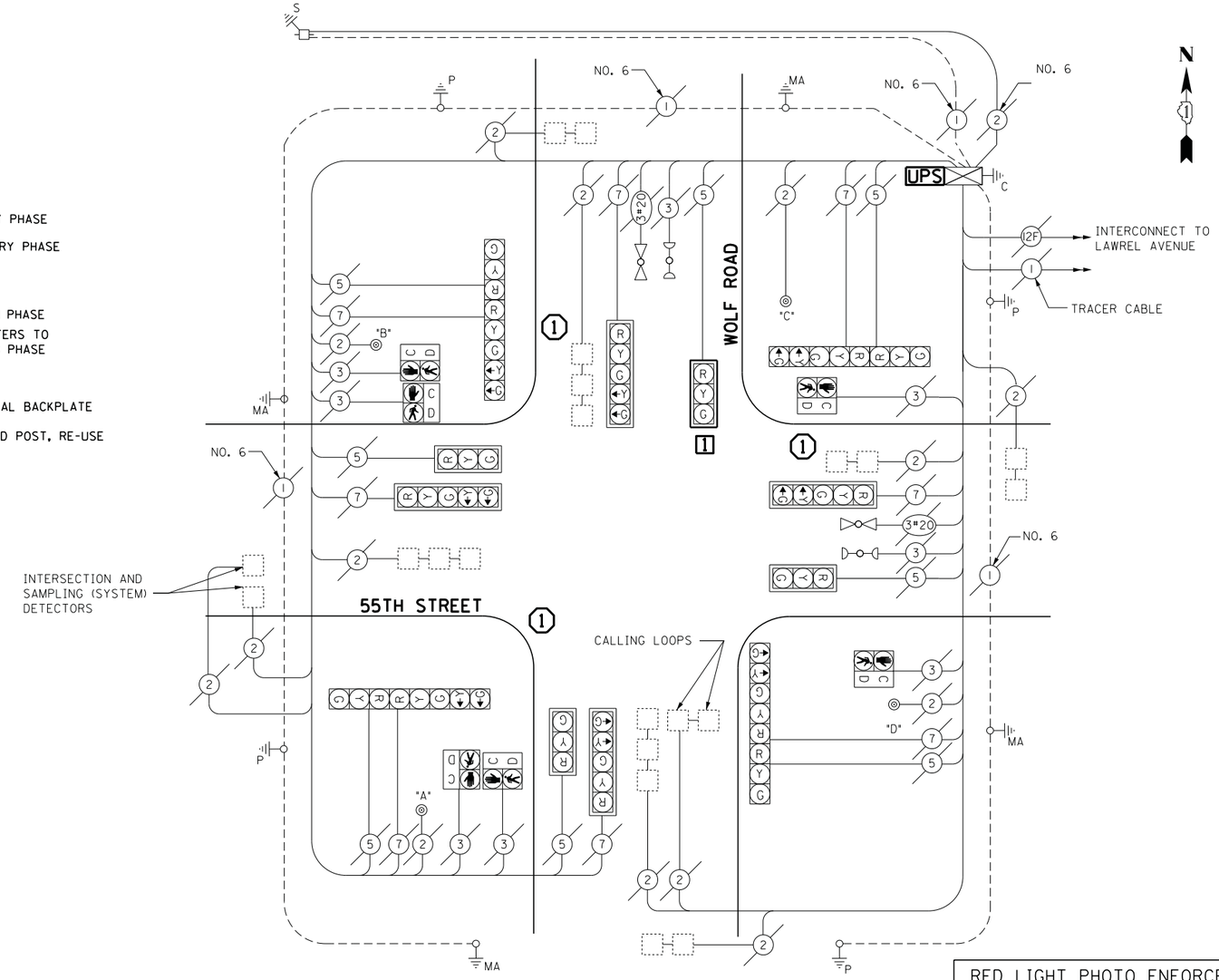

CABLE PLAN

I.D.O.T. TRAFFIC SIGNAL INSTALLATION ELECTRICAL SERVICE REQUIREMENTS					TOTAL WATTAGE
TYPE	NO LAMPS	WATTAGE INCAND.	WATTAGE LED	%OPERATION	
SIGNAL (RED)	16		17	0.5	136
(YELLOW)	16		25	0.25	100
(GREEN)	16		15	0.25	60
ARROW	16		12	0.10	19.2
PED. SIGNAL	6		25	1.00	150
CONTROLLER	1		100	1.00	100
ILLUM. SIGN			25	0.05	-
VIDEO SYSTEM			-	1.00	-
FLASHER				-	
ENERGY COSTS TO:				TOTAL =	565.2

ILLINOIS DEPARTMENT OF TRANSPORTATION
201 WEST CENTER COURT
SCHAUMBURG, ILLINOIS 60196-1096

ENERGY SUPPLY CONTACT: ILYAS MOHIUNDDIN
PHONE: (708) 235-2692
COMPANY: COMMONWEALTH EDISON

SCHEDULE OF QUANTITIES

QUANTITY	UNIT	ITEM
1	EACH	MAINTENANCE OF EXISTING TRAFFIC SIGNAL INSTALLATION
3	EACH	TRAFFIC SIGNAL POST, GALVANIZED STEEL 16 FT.
1	EACH	TRAFFIC SIGNAL BACKPLATE, LOUVERED, ALUMINUM
6	EACH	RELOCATE EXISTING SIGNAL HEAD
1	EACH	RELOCATE EXISTING PEDESTRIAN SIGNAL HEAD
2	EACH	RELOCATE EXISTING PEDESTRIAN PUSH-BUTTON
1	EACH	MODIFY EXISTING CONTROLLER CABINET
1	EACH	REMOVE EXISTING TRAFFIC SIGNAL EQUIPMENT
2	EACH	REMOVE AND REPLACE ANCHOR BOLTS
1	EACH	UNINTERRUPTABLE POWER SUPPLY, SPECIAL

NOTE:

PUSH BUTTON "A" PLACES A CALL IN PHASE 2 & 4
PUSH BUTTON "B" PLACES A CALL IN PHASE 4 & 6
PUSH BUTTON "C" PLACES A CALL IN PHASE 6
PUSH BUTTON "D" PLACES A CALL IN PHASE 2

REMOVAL OF EXISTING TRAFFIC SIGNAL EQUIPMENT

THE FOLLOWING ITEMS SHALL BE REMOVED BY THE CONTRCTOR AND SHALL BE DISPOSED OF BY THEM OUTSIDE THE RIGHT-OF-WAY AT THEIR EXPENSE. THE SALVAGE VALUE OF THE REMOVED EQUIPMENT SHALL BE REFLECTED IN THE CONTRACT BID PRICE.

3 EACH TRAFFIC SIGNAL POST
1 EACH TRAFFIC SIGNAL BACKPLATE

RED LIGHT PHOTO ENFORCED INTERSECTION VENDOR: REDSPEED ILLINOIS

EAGLE EPAC 300 CONTROLLER ON-SITE

TRAFFIC SIGNAL EQUIPMENT SHALL BE EAGLE TO MATCH THE ADJACENT EXISTING SYSTEM

TS# 3865
WESTERN SPRINGS

FILE NAME = J:\13155\Work Order 2\DGN\CADD Sheets\D160Y18-sht-ts-22_3865.dgn	USER NAME = _USER_	DESIGNED - M.A./V.O.	REVISED -
		DRAWN - Y.J./E.C.	REVISED -
	PLOT SCALE = 20.0000 ' / in.	CHECKED - I.Y.	REVISED -
	PLOT DATE = 5/14/2014	DATE - 5/16/2014	REVISED -

STATE OF ILLINOIS
DEPARTMENT OF TRANSPORTATION

SCHEDULE OF QUANTITIES, CABLE PLAN, PHASE DESIGNATION DIAGRAM, AND EMERGENCY VEHICLE PREEMPTION SEQUENCE
55TH STREET AT WOLF ROAD

SCALE: NTS | SHEET NO. 1 OF 1 SHEETS | STA. N/A | TO STA. N/A

F.A.P. RTE.	SECTION	COUNTY	TOTAL SHEETS	SHEET NO.
	2014-032TS	COOK	68	38
		CONTRACT NO. 60Y18		
	ILLINOIS FED. AID PROJECT			