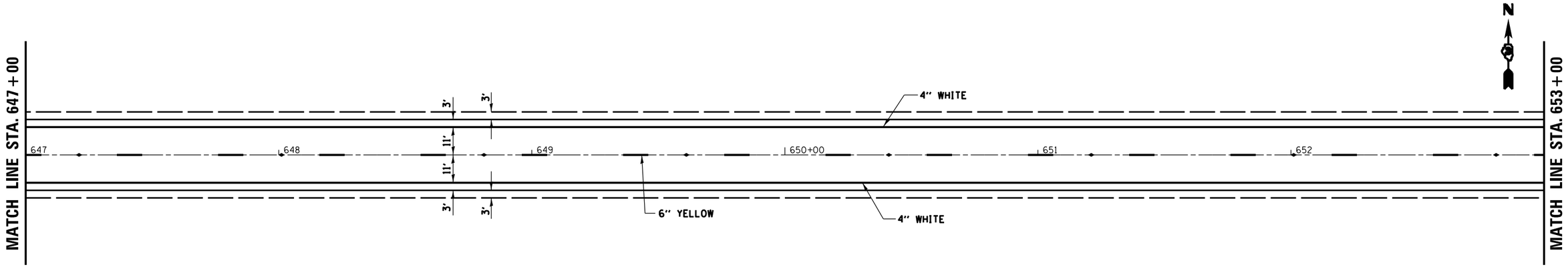

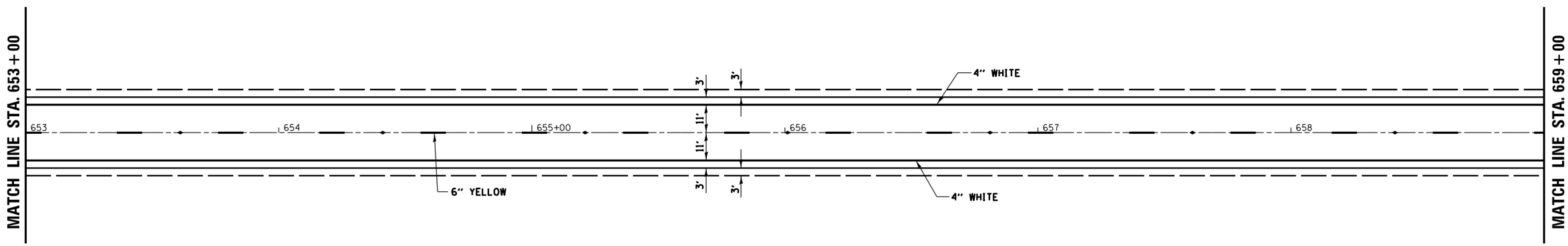

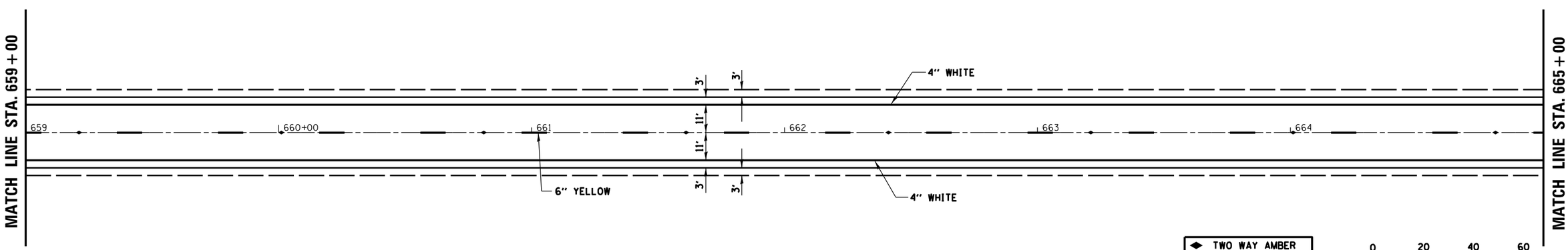

◆ TWO WAY AMBER
◁ ONE WAY CRYSTAL

0 20 40 60
SCALE IN FEET

FILE NAME = $FILEL$	USER NAME = $USER$	DESIGNED -	REVISED -
		DRAWN -	REVISED -
	PLOT SCALE = $SCALE$	CHECKED -	REVISED -
	PLOT DATE = $DATE$	DATE -	REVISED -

STATE OF ILLINOIS
DEPARTMENT OF TRANSPORTATION

PAVEMENT MARKING

SCALE: | SHEET OF SHEETS | STA. 647+00 TO STA. 665+00

F.A.P. RTE.	SECTION	COUNTY	TOTAL SHEETS	SHEET NO.
573	(116)RS-5	DEKALB	43	22

CONTRACT NO. 66812

ILLINOIS FED. AID PROJECT