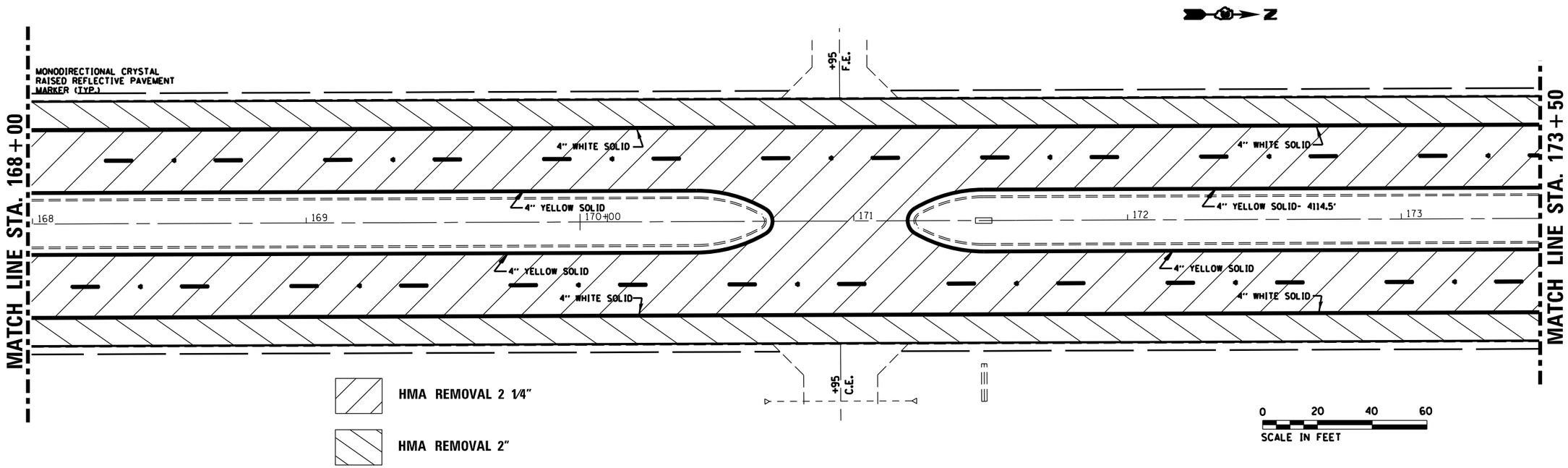

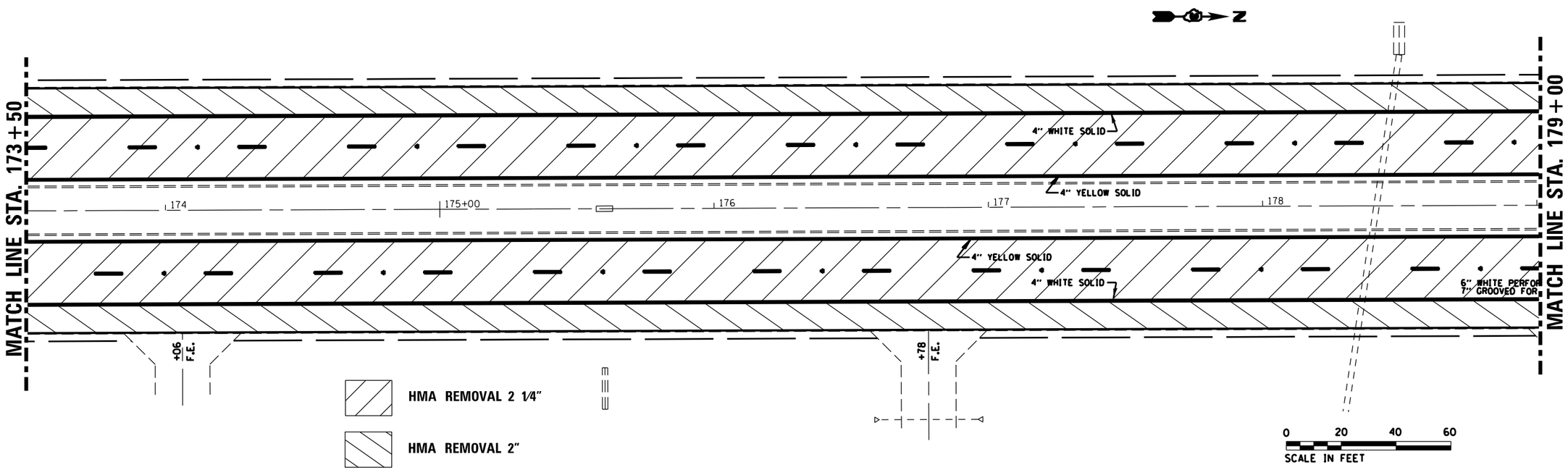

FILE NAME = c:\pw_work\pwidot\mcfaddenka\d0306852\D366C48-sht-plan.dgn	USER NAME = mcfaddenka	DESIGNED -	REVISED -
		DRAWN -	REVISED -
	PLOT SCALE = 40.0000 ' / in.	CHECKED -	REVISED -
Default	PLOT DATE = 6/6/2014	DATE -	REVISED -

STATE OF ILLINOIS
DEPARTMENT OF TRANSPORTATION

PLAN SHEET
STA.168+00 TO STA.179+00

SCALE: | SHEET OF SHEETS | STA. TO STA.

F.A.P. RTE.	SECTION	COUNTY	TOTAL SHEETS	SHEET NO.
68	(5&6) RS-2	LASALLE	41	28

CONTRACT NO. 66C48

ILLINOIS FED. AID PROJECT