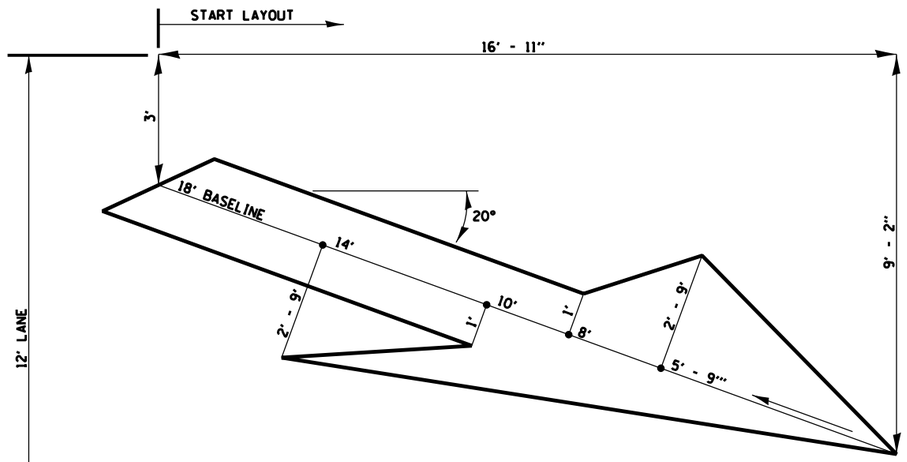

LARGE MERGE ARROWS
42 Sq. Ft.

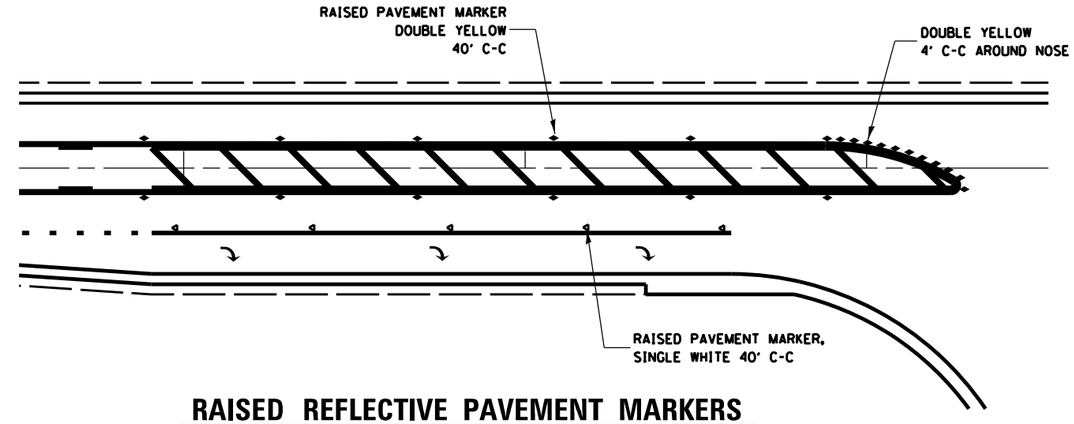

RAISED REFLECTIVE PAVEMENT MARKERS
RIGHT TURN LANE

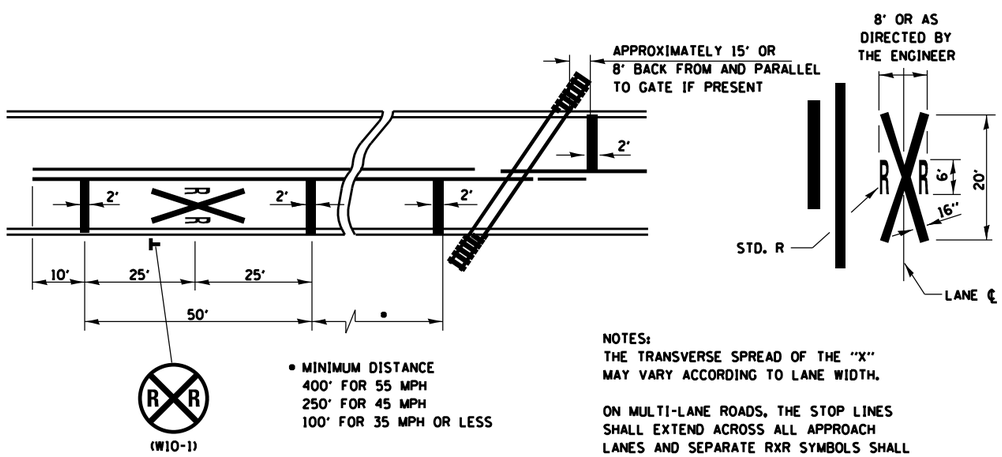

• MINIMUM DISTANCE
400' FOR 55 MPH
250' FOR 45 MPH
100' FOR 35 MPH OR LESS

NOTES:
THE TRANSVERSE SPREAD OF THE "X" MAY VARY ACCORDING TO LANE WIDTH.

ON MULTI-LANE ROADS, THE STOP LINES SHALL EXTEND ACROSS ALL APPROACH LANES AND SEPARATE RXR SYMBOLS SHALL BE PLACED ADJACENT TO EACH OTHER IN EACH LANE.

WHEN THE PAVEMENT MARKING SYMBOL IS USED, A PORTION OF THE SYMBOL SHOULD BE LOCATED DIRECTLY ADJACENT TO THE ADVANCE WARNING SIGN (W10-1).

PAVEMENT MARKINGS AT
RAILROAD–HIGHWAY GRADE CROSSING

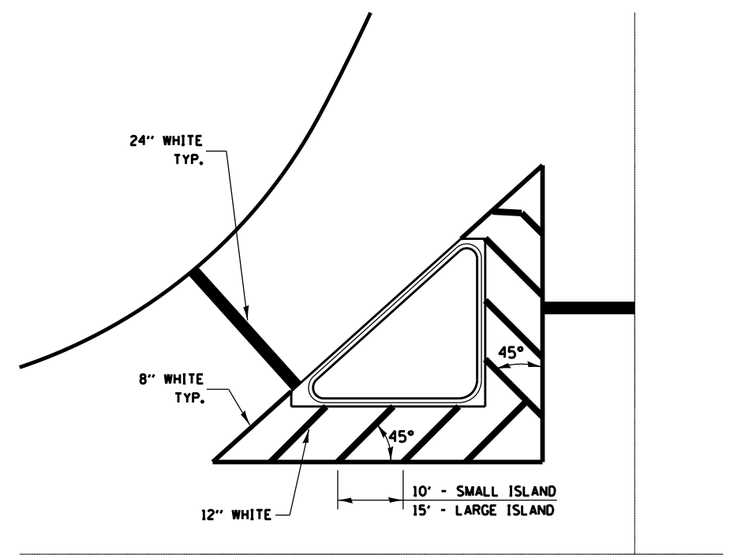

TYPICAL ISLAND

FILE NAME = c:\pw_work\pwidot\mcfaddenka\d0306852\D366C48-sht-details.dgn	USER NAME = mcfaddenka	DESIGNED -	REVISED -	STATE OF ILLINOIS DEPARTMENT OF TRANSPORTATION	DETAILS	F.A.P. RTE. 68	SECTION (5 & 6) RS-2	COUNTY LASALLE	TOTAL SHEETS 41	SHEET NO. 34
	PLOT SCALE = 100.0000 ' / in.	DRAWN -	REVISED -					CONTRACT NO. 66C48		
	PLOT DATE = 6/5/2014	CHECKED -	REVISED -							
		DATE -	REVISED -		SCALE: SHEET NO. OF SHEETS STA. TO STA.	FED. ROAD DIST. NO.	ILLINOIS	FED. AID PROJECT		