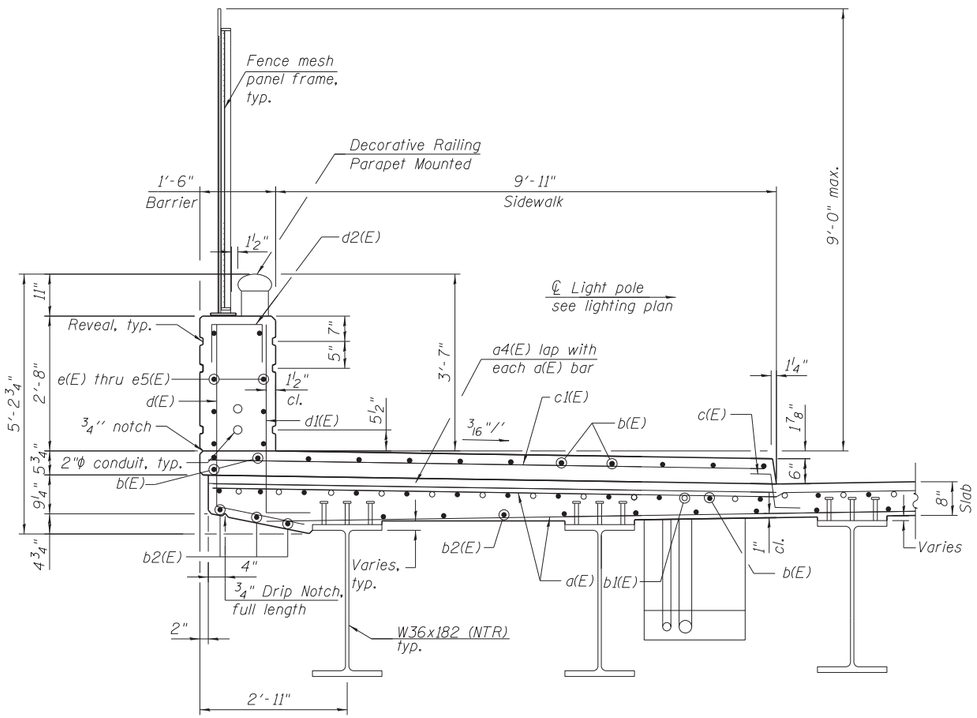

SECTION THRU WEST PARAPET AT PIER

(Looking Up-Station at Pier typ. for East Parapet)

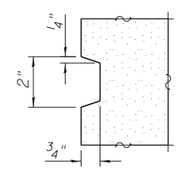

REVEAL DETAIL

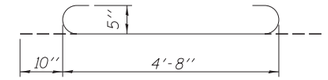

a2(E) BAR

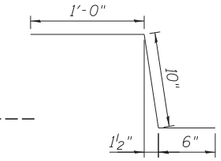

BAR c(E)

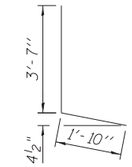

BAR d(E)

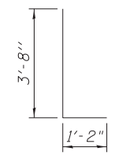

BAR d1(E)

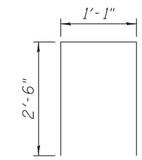

BAR d2(E)

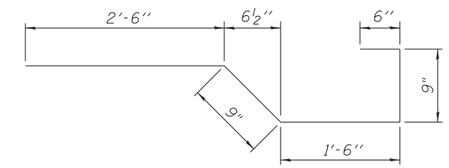

BAR x(E)

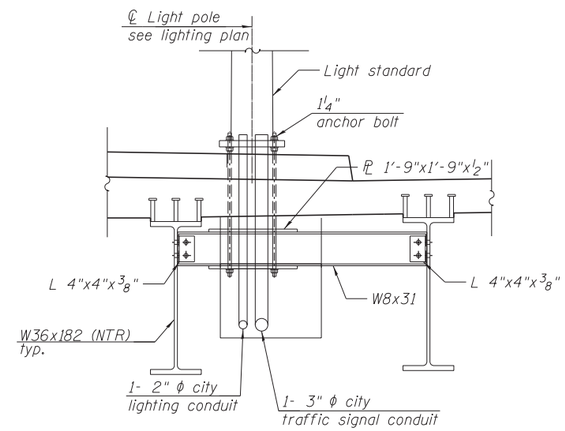

LIGHT POLE SUPPORT ELEVATION

Minimum Bar Laps	
Bar	Lap
#4	2'-7"
#5	3'-3"
#6	3'-10"
#7	5'-2"
#8	6'-9"

BILL OF MATERIAL

Bar	No.	Size	Length	Shape
a(E)	1289	#5	30'-0"	
a1(E)	16	#5	30'-3"	
a2(E)	66	#5	6'-4"	
a3(E)	4	#5	30'-3"	
a4(E)	722	#7	11'-3"	
b(E)	860	#5	27'-5"	
b1(E)	120	#6	50'-0"	
b2(E)	550	#5	25'-3"	
c(E)	490	#5	2'-4"	
c1(E)	490	#5	11'-0"	
d(E)	542	#5	5'-5"	
d1(E)	542	#5	4'-10"	
d2(E)	542	#5	3'-7"	
e(E)	24	#4	5'-7"	
e1(E)	160	#4	19'-7"	
e2(E)	8	#4	12'-9"	
e3(E)	8	#4	4'-11"	
e4(E)	8	#4	19'-6"	
e5(E)	8	#4	10'-1"	
x(E)	124	#5	6'-0"	
Concrete Superstructure			Cu Yd	574.5
Bridge Deck Grooving			Sq Yd	980
Protective Coat			Sq Yd	1,827
Reinforcement Bars, Epoxy Coated			Pound	123,940
Name Plates			Each	1
Conduit Embedded in Structure, 2" Dia. PVC			Foot	956
Detectable Warnings (Special)			Sq Ft	10

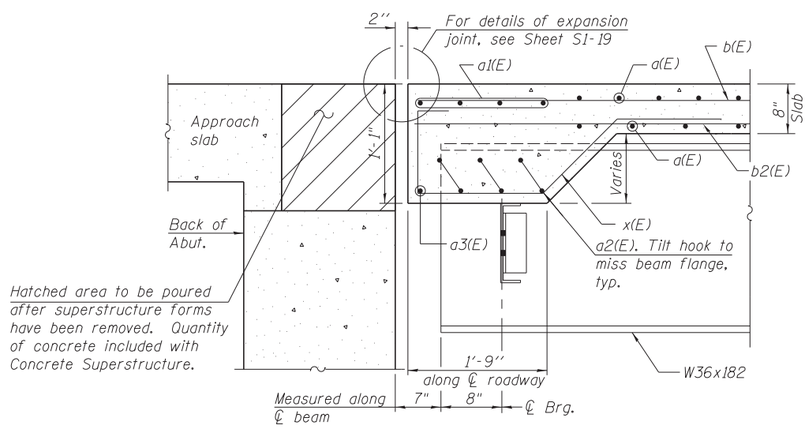

SECTION THRU EXPANSION JOINT

(Looking West, South joint shown North joint similar)

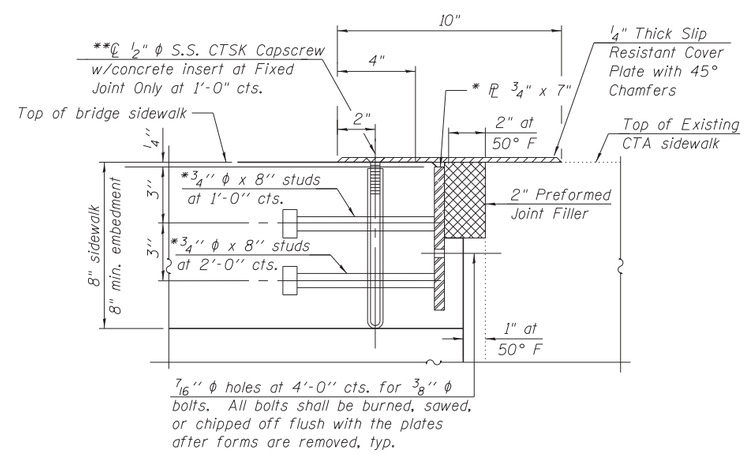

SECTION A-A AT CTA ENTRANCE

NOTES:

1. Reinforcement bars designated (E) shall be epoxy coated.
2. Bars noted thus 3x2-#5 indicates 3 lines of bars with 2 bars per line.
3. For parapet details, see Sheet S1-17.
4. For bar splicer detail, see Sheet S1-43.
5. For light pole location, bolt circle, and quantity of conduits attached to structure, see Electrical plans.
6. For light pole support system sections and details, see Sheet S1-24.
7. For ADA ramp locations, layout, elevations and details see Roadway plans.